SSP 41163G

Russian Segment Specification

International Space Station Program

Revision G
9 October 1999

National Aeronautics and
Space Administration
International Space Station
Program, Johnson Space Center

Houston, Texas

Russian Space Agency

Moscow, Russia

REVISION AND HISTORY PAGE

REV.	DESCRIPTION	PUB. DATE
–	Basic Issue (SSCBD 000057 EFF 9–28–94)	10–04–94
	SCN 001 incorporates ECP 073 (SSCB 000073 EFF 08–28–95)	11–08–95
A	Revision A incorporates ECP 105 (SSCD 000105, 10–05–95) (RELEASED TO FILE)	05–13–96
B	Revision B incorporates ECP 236 (SSCD 000236, EFF. 03–18–96)	05–13–96
C	Revision C incorporates ECP 074, ECP 102, ECP 133, ECP 162, ECP 239, ECP 241, ECP 254, ECP 257, ECP 271, ECP 300, and ECP 285. The RS Specification changes of ECP 162 and ECP 300 are processed as part of ECP 285.	02–19–97
D	Revision D This revision was overcome by the events of TIM #19. All approved issues and ECP resolutions resulting from TIM #19 and TIM #20 will be released under Revision E. There will be no official Revision D release.	Not Released
	The following SCN numbers have been canceled. These SCNs were never created and will never be released. The reason for these cancellations is because the content of the SSCNs have been incorporated into Revision E. SCN 005 (SSCN 303) SCN 006 (SSCN 316) SCN 007 (SSCN 333) SCN 008 (SSCN 355) SCN 003 (SSCN 420) SCN 009 (SSCN 443)	
E	Revision E, Final Document (SSCD 000832, EFF. 02–18–98) Incorporates the following changes: SSCNs 000303, 000316, 000333, 000355, 000420, 000443, 000966, and 000832. The RS Specification changes of SSCN 000297 is processed as part of SSCN 000420.	11–29–01
	The following SCN numbers have been canceled. These SCNs were never created and will never be released. The reason for these cancellations is because the content of the SSCNs have been incorporated into Revision F. SCN 004 (SSCN 253) SCN 010 (SSCN 555)	
F	Revision F, Final Document (SSCD 001402, EFF. 10–01–98) Incorporates the following changes: SSCNs 000253, 000555 and 001402.	11–30–01

REVISION AND HISTORY PAGE

REV.	DESCRIPTION	PUB. DATE
	The following SCN numbers have been canceled. These SCNs were never created and will never be released. The reason for these cancellations is because the content of the SSCNs have been incorporated into Revision G. SCN 011 (SSCN 993) SCN 015 (SSCN 1465) SCN 016 (SSCN 1555) SCN 017 (SSCN 1342) SCN 018 (SSCN 1579) SCN 019 (SSCN 1803) SCN 020 (SSCN 1806) SCN 014 (SSCN 1293)	
G	Revision G, Final Document (SSCD 002666, EFF. 09–28–00) Incorporates the following changes: SSCNs 000993, 001293, 001465, 001555, 001342, 001579, 001806, 001803 and 002666.	11–30–01

ERU: /s/ M. Hehn 11–30–01

INTERNATIONAL SPACE STATION PROGRAM

RUSSIAN SEGMENT SPECIFICATION

9 OCTOBER 1999

CONCURRENCE

PREPARED BY:	Roy Norris	2–6610
	PRINT NAME	ORGN
	SIGNATURE	DATE
CHECKED BY:	Al Bishop	OB–2
	PRINT NAME	ORGN
	SIGNATURE	DATE
SUPERVISED BY (BOEING):	Greg Deiter	2–6610
	PRINT NAME	ORGN
	SIGNATURE	DATE
SUPERVISED BY (NASA):	Leasa Butler	OB
	PRINT NAME	ORGN
	SIGNATURE	DATE
DQA:	Lucie Delheimer	2–6610
	PRINT NAME	ORGN
	/s/ Lucie Delheimer	11/19/99
	SIGNATURE	DATE

INTERNATIONAL SPACE STATION PROGRAM

RUSSIAN SEGMENT SPECIFICATION

9 OCTOBER 1999

PREFACE

SSP 41163, (Russian Segment Specification) equally applies to NASA and the Russian Space Agency (RSA). This document is under the control of the Space Station Control Board (SSCB) with the concurrence of the respective International Partners, any changes or revisions will be approved by the SSCB and RSA.

Program Manager, International Space Station	Date

NASA/RSA

INTERNATIONAL SPACE STATION PROGRAM

RUSSIAN SEGMENT SPECIFICATION

9 OCTOBER 1999

NASA Program Manager	RSA Deputy General Director
Randy A. Brinkley	A. I. Medvedchikov
Print Name	Print Name
DATE	DATE

INTERNATIONAL SPACE STATION PROGRAM

RUSSIAN SEGMENT SPECIFICATION

LIST OF CHANGES

9 OCTOBER 1999

All changes to paragraphs, tables, and figures in this document are shown below:

SSCBD	ENTRY DATE	PARAGRAPH	TITLE
		All	
			TABLE(S)
		All	
			FIGURE(S)
		All	
			APPENDIX(ES)
		NONE	

TABLE OF CONTENTS

PARAGRAPH		PAGE
1.0	SCOPE.	1
1.1	IDENTIFICATION.	1
1.2	SYSTEM OVERVIEW.	1
2.0	APPLICABLE DOCUMENTS.	2
2.1	GOVERNMENT DOCUMENTS.	2
2.1.1	SPECIFICATIONS, STANDARDS, AND HANDBOOKS.	2
2.1.2	OTHER GOVERNMENT DOCUMENTS, DRAWINGS, AND PUBLICATIONS.	2
2.2	NON–GOVERNMENT DOCUMENTS.	3
2.3	ORDER OF PRECEDENCE.	3
3.0	SYSTEM REQUIREMENTS.	4
3.1	SYSTEM DEFINITION.	4
3.1.1	SYSTEM DESCRIPTION.	4
3.1.1.1	FUNCTIONAL CARGO BLOCK (FGB) DESCRIPTION.	4
3.1.1.2	SERVICE MODULE (SM) DESCRIPTION.	4
3.1.1.3	LIFE SUPPORT MODULE (LSM) DESCRIPTION.	4
3.1.1.4	DOCKING COMPARTMENT (DC) DESCRIPTION.	4
3.1.1.5	UNIVERSAL DOCKING MODULE (UDM) DESCRIPTION.	4
3.1.1.6	SOYUZ VEHICLE DESCRIPTION.	4
3.1.1.7	CARGO VEHICLE (CV) DESCRIPTION.	5
3.1.1.8	SCIENCE POWER PLATFORM DESCRIPTION.	5
3.1.1.9	RESERVED.	5
3.1.1.10	RESEARCH MODULE DESCRIPTION.	5
3.1.1.11	RUSSIAN GROUND SEGMENT (RGS).	5
3.1.1.12	DOCKING AND STOWAGE MODULE (DSM) DESCRIPTION.	5
3.1.2	MISSIONS.	5
3.1.3	THREAT.	6
3.1.4	RESERVED.	6
3.1.5	INTERFACE REQUIREMENTS.	6
3.1.5.1	EXTERNAL INTERFACES.	6
3.1.5.1.1	UNITED STATES ON–ORBIT SEGMENT (USOS) EXTERNAL INTERFACE DESCRIPTION.	7

TABLE OF CONTENTS – Continued

PARAGRAPH		PAGE
3.1.5.1.2	UNITED STATES GROUND SEGMENT EXTERNAL INTERFACE DESCRIPTION.	7
3.1.5.1.3	POWER DATA GRAPPLE FIXTURE (PDGF) INTERFACE.	7
3.1.5.1.3.1	FGB POWER DATA GRAPPLE FIXTURE (PDGF) AND VIDEO SIGNAL CONVERTER (VSC) INTERFACES.	7
3.1.5.1.3.2	SPP/SSRMS INTERFACE.	7
3.1.5.1.4	ORBITER EXTERNAL INTERFACE DESCRIPTION.	7
3.1.5.1.4.1	FGB ORBITER EXTERNAL INTERFACE DESCRIPTION.	7
3.1.5.1.4.2	SPP TO ORBITER EXTERNAL INTERFACE.	8
3.1.5.1.5	RS TO ATV INTERFACE DESCRIPTION.	8
3.1.5.1.6	CREW EXTERNAL INTERFACE DESCRIPTION.	8
3.1.5.1.7	ORLAN PRESSURE SUIT.	8
3.1.5.2	INTERNAL INTERFACES.	8
3.1.5.2.1	FGB INTERFACE.	8
3.1.5.2.2	SM INTERFACE.	11
3.1.5.2.3	LSM INTERFACE.	11
3.1.5.2.4	DC INTERFACE.	11
3.1.5.2.5	UDM INTERFACE.	11
3.1.5.2.6	SOYUZ VEHICLE INTERFACE.	11
3.1.5.2.7	CV INTERFACE.	11
3.1.5.2.8	SPP INTERFACE.	12
3.1.5.2.9	RESERVED.	12
3.1.5.2.10	RESEARCH MODULE INTERFACE.	12
3.1.5.2.11	RUSSIAN GROUND SEGMENT.	12
3.1.5.2.12	DMS INTERFACE.	12
3.1.5.2.13	PDGF STAND INTERFACE.	12
3.2	CHARACTERISTICS.	13
3.2.1	PERFORMANCE CHARACTERISTICS.	13
3.2.1.1	STATE: PERFORM MISSION.	13
3.2.1.1.1	MODE: STANDARD.	13
3.2.1.1.1.1	CONTROL ATMOSPHERIC PRESSURE.	13
3.2.1.1.1.1.1	CAPABILITY: CONTROL TOTAL PRESSURE.	13
3.2.1.1.1.1.2	CAPABILITY: CONTROL OXYGEN PARTIAL PRESSURE.	13

TABLE OF CONTENTS – Continued

PARAGRAPH		PAGE
3.2.1.1.1.1.3	CAPABILITY: RELIEVE OVERPRESSURE.	13
3.2.1.1.1.1.4	CAPABILITY: EQUALIZE PRESSURE.	13
3.2.1.1.1.2	CONDITION ATMOSPHERE.	14
3.2.1.1.1.2.1	CAPABILITY: CONTROL ATMOSPHERE TEMPERATURE.	14
3.2.1.1.1.2.2	CAPABILITY: CONTROL ATMOSPHERE MOISTURE.	14
3.2.1.1.1.2.3	CAPABILITY: CIRCULATE ATMOSPHERE.	14
3.2.1.1.1.3	LIGHT STATION.	14
3.2.1.1.1.3.1	CAPABILITY: CONTROL INTERNAL LIGHTING.	14
3.2.1.1.1.3.2	CAPABILITY: ILLUMINATE INTERNAL AREAS.	14
3.2.1.1.1.3.3	ACCOMMODATE ON RS A SOURCE OF LIGHT (NAVIGATION LIGHT) FOR SHUTTLE STAR TRACKER.	15
3.2.1.1.1.4	RESPOND TO LOSS OF FUNCTION.	15
3.2.1.1.1.4.1	CAPABILITY: ISOLATE TO RECOVERY LEVEL.	15
3.2.1.1.1.4.2	CAPABILITY: RECOVER LOST FUNCTION.	17
3.2.1.1.1.4.3	CAPABILITY: ISOLATE FOR SAFING.	17
3.2.1.1.1.4.4	CAPABILITY: SAFE	17
3.2.1.1.1.5	CONTROL STATION MODES.	18
3.2.1.1.1.5.1	CAPABILITY: MAINTAIN STATION MODE.	18
3.2.1.1.1.5.2	CAPABILITY: TRANSITION STATION MODES.	19
3.2.1.1.1.5.3	CAPABILITY: SUPPORT EXECUTE ATTITUDE CONTROL HANDOVER OPERATIONS.	22
3.2.1.1.1.6	SUPPORT CREW CONTROL INTERFACE.	22
3.2.1.1.1.6.1	CAPABILITY: PROVIDE DATA TO CREW.	22
3.2.1.1.1.6.2	CAPABILITY: ACCEPT CREW INPUTS AND COMMANDS.	22
3.2.1.1.1.6.3	CAPABILITY: PROVIDE CREW CONTROL INTERFACE.	22
3.2.1.1.1.7	MONITOR SYSTEM STATUS.	23
3.2.1.1.1.7.1	CAPABILITY: ACQUIRE FUNCTION STATUS DATA.	23
3.2.1.1.1.7.2	CAPABILITY: ASSESS FUNCTION STATUS DATA.	23
3.2.1.1.1.8	RESPOND TO EMERGENCY CONDITIONS.	23
3.2.1.1.1.8.1	CAPABILITY: RESPOND TO FIRE.	23
3.2.1.1.1.8.2	CAPABILITY: RESPOND TO RAPID DECOMPRESSION.	23
3.2.1.1.1.8.3	CAPABILITY: RESPOND TO HAZARDOUS ATMOSPHERE.	27
3.2.1.1.1.9	PROVIDE ELECTRICAL POWER.	27

TABLE OF CONTENTS – Continued

PARAGRAPH		PAGE
3.2.1.1.1.9.1	CAPABILITY: GENERATE POWER.	27
3.2.1.1.1.9.2	CAPABILITY: DISTRIBUTE POWER.	27
3.2.1.1.1.9.3	CAPABILITY: STORE ENERGY.	29
3.2.1.1.1.10	MAINTAIN THERMAL CONDITIONING.	29
3.2.1.1.1.10.1	CAPABILITY: COLLECT THERMAL ENERGY.	29
3.2.1.1.1.10.2	CAPABILITY: TRANSMIT THERMAL ENERGY.	29
3.2.1.1.1.10.3	CAPABILITY: DISPOSE OF THERMAL ENERGY.	29
3.2.1.1.1.11	MAINTAIN TIME REFERENCE.	29
3.2.1.1.1.11.1	CAPABILITY: DISTRIBUTE TIME.	29
3.2.1.1.1.12	SUPPORT FLIGHT CREW.	30
3.2.1.1.1.12.1	CAPABILITY: ACCOMMODATE CREW HYGIENE AND WASTES.	30
3.2.1.1.1.12.2	CAPABILITY: SUPPORT RADIATION EXPOSURE MONITORING.	30
3.2.1.1.1.12.3	REQUIREMENTS FOR THE RS CREW QUARTERS.	30
3.2.1.1.1.12.4	CAPABILITY: SUPPORT CREW PERSONAL ITEMS.	31
3.2.1.1.1.12.5	CAPABILITY: SUPPORT HOUSEKEEPING.	31
3.2.1.1.1.12.6	CAPABILITY: SUPPORT CREW HEALTH.	32
3.2.1.1.1.12.7	CAPABILITY: SUPPORT FOOD AND WATER CONSUMPTION AND CLEANUP.	32
3.2.1.1.1.12.8	CAPABILITY: SUPPORT FOOD PROCESSING.	32
3.2.1.1.1.12.9	CAPABILITY: PROVIDE FOOD.	32
3.2.1.1.1.12.10	CAPABILITY: SUPPORT INTERNAL CREW RESTRAINT AND MOBILITY	32
3.2.1.1.1.13	CONTROL INTERNAL CARBON DIOXIDE AND CONTAMINANTS.	33
3.2.1.1.1.13.1	CAPABILITY: CONTROL CARBON DIOXIDE.	33
3.2.1.1.1.13.2	CAPABILITY: CONTROL GASEOUS CONTAMINANTS.	34
3.2.1.1.1.13.3	CAPABILITY: CONTROL AIRBORNE PARTICULATE CONTAMINANTS.	36
3.2.1.1.1.13.4	CAPABILITY: CONTROL AIRBORNE MICROBIAL GROWTH.	36
3.2.1.1.1.14	PROVIDE WATER.	36
3.2.1.1.1.14.1	CAPABILITY: PROVIDE WATER FOR CREW USE.	36
3.2.1.1.1.15	PROVIDE VISUAL ACCESS.	38
3.2.1.1.1.15.1	CAPABILITY: PROVIDE DIRECT VISUAL ACCESS.	38
3.2.1.1.1.15.2	CAPABILITY: PROVIDE REMOTE INTERNAL VISUAL ACCESS.	38
3.2.1.1.1.15.3	RESERVED.	38

TABLE OF CONTENTS – Continued

PARAGRAPH		PAGE
3.2.1.1.1.15.4	CAPABILITY: ACCOMMODATION OF PDGF VIDEO CABLE.	38
3.2.1.1.1.16	FACILITATE INTERNAL VOICE COMMUNICATION.	38
3.2.1.1.1.16.1	CAPABILITY: TRANSMIT VOICE COMMUNICATIONS.	38
3.2.1.1.1.16.2	CAPABILITY: RECEIVE VOICE COMMUNICATION.	38
3.2.1.1.1.17	RESERVED.	39
3.2.1.1.1.18	DETERMINE NAVIGATION PARAMETERS.	39
3.2.1.1.1.18.1	CAPABILITY: DETERMINE STATE VECTOR AND ATTITUDE.	39
3.2.1.1.1.18.2	CAPABILITY: GENERATE POINTING AND SUPPORT DATA.	39
3.2.1.1.1.19	MAINTAIN ATTITUDE – NONPROPULSIVE.	40
3.2.1.1.1.19.1	CAPABILITY: MAINTAIN ATTITUDE – NONPROPULSIVE.	40
3.2.1.1.1.20	SUPPORT ON–ORBIT TO GROUND COMMUNICATION.	41
3.2.1.1.1.20.1	CAPABILITY: SUPPORT UPLINKED DATA.	41
3.2.1.1.1.20.2	CAPABILITY: PROVIDE DATA FOR DOWNLINK.	41
3.2.1.1.1.21	SUPPORT INTERNAL EQUIPMENT MANIPULATION AND MAINTENANCE.	41
3.2.1.1.1.21.1	CAPABILITY: SUPPORT INTERNAL EQUIPMENT TRANSLATION.	41
3.2.1.1.1.21.2	CAPABILITY: SUPPORT INTERNAL EQUIPMENT REMOVAL AND REPLACEMENT.	41
3.2.1.1.1.21.3	CAPABILITY: SUPPORT INTERNAL EQUIPMENT IDENTIFICATION.	41
3.2.1.1.1.21.4	CAPABILITY: SUPPORT INTERNAL EQUIPMENT RESTRAINT.	41
3.2.1.1.1.21.5	CAPABILITY: SUPPORT ORBITAL REPLACEABLE UNIT REPAIR.	42
3.2.1.1.1.21.6	CAPABILITY: STORE INTERNAL EQUIPMENT.	42
3.2.1.1.1.22	SUPPORT STATION TO EXTERNAL VEHICLE PROXIMITY OPERATIONS COMMUNICATION.	42
3.2.1.1.1.22.1	CAPABILITY: SUPPORT EXTERNAL INPUT DATA.	42
3.2.1.1.1.22.2	CAPABILITY: PROVIDE DATA FOR EXTERNAL VEHICLES.	42
3.2.1.1.1.22.3	CAPABILITY: SUPPORT EXTERNAL VEHICLE WAVE–OFF.	42
3.2.1.1.1.23	RESERVED.	42
3.2.1.1.1.24	CAPABILITIES DURING PRESSURE CHANGE.	42
3.2.1.1.2	MODE: REBOOST.	45
3.2.1.1.2.1	EXECUTE TRANSLATION MANEUVERS.	45
3.2.1.1.2.1.1	CAPABILITY: EXECUTE MANEUVER GUIDANCE.	45
3.2.1.1.2.1.2	CAPABILITY: EXECUTE TRANSLATIONAL THRUST.	46

TABLE OF CONTENTS – Continued

PARAGRAPH		PAGE
3.2.1.1.2.2	CAPABILITY: CONTROL ATTITUDE – PROPULSIVE.	54
3.2.1.1.2.2.1	ROTATIONAL CONTROL.	54
3.2.1.1.2.2.2	PROVIDE DESATURATION TORQUE.	58
3.2.1.1.3	RESERVED.	58
3.2.1.1.4	MODE: MICROGRAVITY.	58
3.2.1.1.4.1	SUPPORT MICROGRAVITY EXPERIMENTS.	59
3.2.1.1.4.1.1	CAPABILITY: LIMIT ACCELERATIONS.	59
3.2.1.1.4.1.2	LIMIT ANGULAR MOMENTUM DISTURBANCE.	59
3.2.1.1.5	MODE: SURVIVAL.	61
3.2.1.1.6	MODE: PROXIMITY OPERATIONS.	62
3.2.1.1.6.1	CAPABILITY: PROVIDE AUTOMATED COLLISION AVOIDANCE MANEUVERS.	62
3.2.1.1.6.2	RESERVED.	63
3.2.1.1.6.3	CAPABILITY: PROVIDE DOCKING STATUS.	63
3.2.1.1.6.4	CAPABILITY: SUPPORT EXTERNAL VEHICLE TO ISS RELATIVE NAVIGATION.	63
3.2.1.1.6.5	CAPABILITY: EXTERNAL VEHICLE MONITORING DURING RENDEZVOUS APPROACH.	64
3.2.1.1.6.6	CAPABILITY: MISSION PLANNING – RENDEZVOUS AND DOCKING.	64
3.2.1.1.6.7	CAPABILITY: EXTERNAL VEHICLE VIDEO TRANSMISSION.	64
3.2.1.1.7	MODE: EXTERNAL OPERATIONS.	64
3.2.1.1.7.1	SUPPORT EVA OPERATIONS.	64
3.2.1.1.7.1.1	CAPABILITY: SUPPORT VOICE AND DATA COMMUNICATIONS.	64
3.2.1.1.7.1.2	COMMUNICATION WITH U.S. AIRLOCK ORLAN SUITS.	65
3.2.1.1.7.1.3	RESERVED.	65
3.2.1.1.7.1.4	CAPABILITY: SUPPORT STATION INGRESS.	65
3.2.1.1.7.1.5	CAPABILITY: ILLUMINATE EXTERNAL WORKSITES AND TRANSLATION PATHS.	65
3.2.1.1.7.1.6	CAPABILITY: TRACK EXTERNAL CREW.	65
3.2.1.1.7.1.7	CAPABILITY: SELF RESCUE OF EVA CREW.	65
3.2.1.1.7.2	ACCOMMODATE MOBILE SERVICING SYSTEM.	65
3.2.1.1.8	MODE: CREW DELIVERY AND RETURN.	66
3.2.1.1.8.1	SUPPORT SCHEDULED CREW DELIVERY AND RETURN.	66

TABLE OF CONTENTS – Continued

PARAGRAPH		PAGE
3.2.1.1.8.1.1	CAPABILITY: SCHEDULED CREW DELIVERY AND RETURN.	66
3.2.1.1.8.2	SUPPORT UNPLANNED CREW RETURN.	66
3.2.1.1.8.2.1	CAPABILITY: SUPPORT UNPLANNED CREW RETURN.	66
3.2.1.2	EXTERNAL AND PROXIMITY OPERATIONS.	67
3.2.1.2.1	MODE: PROXIMITY OPERATIONS.	67
3.2.1.2.2	MODE: EXTERNAL OPERATIONS.	67
3.2.1.3	STATE: SUPPORT MISSION.	67
3.2.1.3.1	RESERVED.	67
3.2.1.3.2	MODE: SPACE TRANSPORT.	67
3.2.1.3.2.1	SUPPORT RESUPPLY AND RETURN.	67
3.2.1.3.2.1.1	CAPABILITY: TRANSPORT CARGO.	67
3.2.2	PHYSICAL CHARACTERISTICS.	68
3.2.2.1	APPROACH AND DEPARTURE CORRIDOR.	68
3.2.2.3	ESTABLISH WORKSITES.	68
3.2.2.3.1	COMMON RESTRAINT HARDWARE.	69
3.2.2.4	PROVIDE EXTERNAL AND INTERNAL STOWAGE OF TOOLS AND HARDWARE.	69
3.2.2.5	ISS STORAGE REQUIREMENTS.	71
3.2.2.6	TRANSFER CREW AND EXTERNAL HARDWARE.	71
3.2.2.7	DISTRIBUTE COMMANDS AND DATA.	71
3.2.2.7.1	PROVIDE OUTPUT AMPLITUDE.	71
3.2.2.8	SPP.	71
3.2.2.9	ATV.	71
3.2.3	RELIABILITY.	71
3.2.3.1	FAILURE TOLERANCE.	71
3.2.3.2	SERVICE LIFE.	75
3.2.3.3	FAILURE PROPAGATION.	76
3.2.3.4	REDUNDANCY STATUS.	76
3.2.4	MAINTAINABILITY.	76
3.2.4.1	QUALITATIVE MAINTAINABILITY REQUIREMENTS.	76
3.2.4.1.1	RESERVED.	76
3.2.4.1.2	PROCEDURES AND TOOLS.	76
3.2.4.2	QUANTITATIVE MAINTAINABILITY REQUIREMENTS.	76

TABLE OF CONTENTS – Continued

PARAGRAPH		PAGE
3.2.4.2.1	EQUIPMENT MAINTENANCE TIME IN NONPRESSURIZED AREAS.	76
3.2.4.2.2	CAPABILITY: TOTAL MEAN MAINTENANCE CREW HOURS/YEAR (TMMCH/Y).	76
3.2.4.2.2.1	EVA TOTAL MEAN MAINTENANCE CREW HOURS/YEAR.	76
3.2.4.2.2.2	IVA TOTAL MEAN MAINTENANCE CREW HOURS/YEAR.	77
3.2.4.2.2.2.1	IVA IN SUPPORT OF EVA.	77
3.2.4.2.3	AIRLOCK CYCLES TO SUPPORT EVA.	77
3.2.4.3	FAILURE DETECTION, ISOLATION AND RECOVERY.	77
3.2.4.3.1	MANUAL CONTROL OF FDIR.	77
3.2.4.3.2	TESTING AT OPERATING LOCATION.	77
3.2.4.3.3	MANUAL FDIR.	77
3.2.4.3.4	AUTOMATIC FUNCTIONAL RECOVERY CONFIRMATION.	78
3.2.4.3.5	AUTOMATIC SAFING CONFIRMATION.	78
3.2.4.3.6	FALSE ALARM MITIGATION.	78
3.2.4.4	PRESSURE INTEGRITY.	78
3.2.5	DOCKING MECHANISM AND CONTACT CONDITIONS.	78
3.2.6	ENVIRONMENTAL CONDITIONS.	81
3.2.6.1	ON–ORBIT ENVIRONMENTAL CONDITIONS.	81
3.2.6.1.1	THERMAL ENVIRONMENT.	81
3.2.6.1.2	NEUTRAL ATMOSPHERE.	84
3.2.6.1.3	EXTERNAL CONTAMINATION.	85
3.2.6.1.4	ELECTROMAGNETIC AND GEOMAGNETIC FIELDS.	85
3.2.6.1.5	PLASMA.	86
3.2.6.1.6	IONIZING RADIATION.	87
3.2.6.1.7	RESERVED.	87
3.2.6.1.8	METEOROIDS AND ORBITAL DEBRIS (M/OD).	87
3.2.6.1.9	RESERVED.	88
3.2.6.1.10	PLUME IMPINGEMENT PRESSURES.	88
3.2.6.1.11	FLIGHT ATTITUDE TABLE.	88
3.3	DESIGN AND CONSTRUCTION.	90
3.3.1	MATERIALS, PROCESSES AND PARTS.	90
3.3.1.1	RESERVED.	90

TABLE OF CONTENTS – Continued

PARAGRAPH		PAGE
3.3.1.2	RESERVED.	90
3.3.1.3	MATERIALS AND PROCESSES.	90
3.3.1.4	ELECTRICAL, ELECTRONIC, AND ELECTROMECHANICAL (EEE) PARTS.	90
3.3.1.5	SEAL LIFE.	90
3.3.1.6	FLUID AND CONNECTOR STANDARDS.	90
3.3.1.7	CAPABILITY: PROVIDE PROPELLANTS AND PRESSURANT GASES.	91
3.3.2	ELECTROMAGNETIC RADIATION.	91
3.3.2.1	ELECTROMAGNETIC COMPATIBILITY (EMC).	91
3.3.3	NAMEPLATES AND PRODUCT MARKING.	91
3.3.3.1	LABELING.	91
3.3.3.1.1	VENDOR LABELS.	91
3.3.3.2	ON–ORBIT LABELS.	91
3.3.4	WORKMANSHIP.	91
3.3.4.1	CLEANLINESS.	92
3.3.4.2	CLEANLINESS OF SURFACES IN CONTACT WITH FLUIDS.	92
3.3.5	RESERVED.	92
3.3.6	SAFETY.	92
3.3.6.1	GENERAL.	92
3.3.6.1.1	CATASTROPHIC HAZARDS.	92
3.3.6.1.2	CRITICAL HAZARDS	92
3.3.6.1.3	DESIGN FOR MINIMUM RISK.	92
3.3.6.1.4	CONTROL OF FUNCTIONS RESULTING IN CRITICAL HAZARDS.	93
3.3.6.1.4.1	INADVERTENT OPERATION RESULTING IN A CRITICAL HAZARD.	93
3.3.6.1.4.2	LOSS OF A FUNCTION RESULTING IN A CRITICAL HAZARD.	93
3.3.6.1.5	CONTROL OF FUNCTIONS RESULTING IN CATASTROPHIC HAZARDS.	93
3.3.6.1.5.1	INADVERTENT OPERATION RESULTING IN A CATASTROPHIC HAZARD.	93
3.3.6.1.5.2	LOSS OF FUNCTION RESULTING IN A CATASTROPHIC HAZARD.	93
3.3.6.1.6	SUBSEQUENT INDUCED LOADS.	94
3.3.6.1.7	SAFETY INTERLOCKS.	94

TABLE OF CONTENTS – Continued

PARAGRAPH		PAGE
3.3.6.1.8	ENVIRONMENTAL COMPATIBILITY.	94
3.3.6.1.9	REDUNDANT FUNCTIONS.	94
3.3.6.2	HAZARD DETECTION AND SAFING.	94
3.3.6.2.1	SAFING PRIOR TO RETURN/RESUPPLY/REFURBISHMENT.	94
3.3.6.2.2	MONITORS.	94
3.3.6.2.2.1	STATUS INFORMATION.	94
3.3.6.2.2.2	HAZARDOUS FUNCTION OPERATION PREVENTION.	94
3.3.6.2.2.3	LOSS OF INPUT OR FAILURE.	94
3.3.6.2.2.4	LAUNCH SITE AVAILABILITY.	95
3.3.6.2.2.5	FLIGHT CREW AVAILABILITY.	95
3.3.6.2.3	NEAR REAL–TIME MONITORING.	95
3.3.6.2.4	REAL–TIME MONITORING.	95
3.3.6.2.4.1	MAINTAIN STATUS OF HAZARD CONTROLS.	95
3.3.6.2.4.2	CREW RESPONSE TIME AND SAFING PROCEDURES.	95
3.3.6.2.4.3	GROUND MONITORING.	95
3.3.6.3	COMMAND AND COMPUTER CONTROL OF HAZARDOUS FUNCTIONS.	95
3.3.6.3.1	COMPUTER CONTROL OF HAZARDOUS FUNCTIONS.	95
3.3.6.3.1.1	DETECTION AND RECOVERY.	96
3.3.6.3.1.2	INDEPENDENT SAFING ACTION.	96
3.3.6.4	HAZARDOUS MATERIALS.	96
3.3.6.4.1	HAZARDOUS FLUID CONTAINMENT FAILURE TOLERANCE.	96
3.3.6.5	PYROTECHNICS FOR RS APPLICATIONS.	96
3.3.6.6	RADIATION.	96
3.3.6.6.1	RESERVED.	96
3.3.6.6.2	NONIONIZING RADIATION.	96
3.3.6.6.3	SPACESUIT ELECTRIC FIELD RADIATION.	98
3.3.6.6.4	SPACESUIT MAGNETIC FIELD RADIATION.	98
3.3.6.7	OPTICS AND LASERS.	98
3.3.6.7.1	LASERS.	98
3.3.6.7.2	OPTICAL REQUIREMENTS.	99
3.3.6.7.2.1	OPTICAL INSTRUMENTS.	99
3.3.6.7.2.2	PERSONNEL PROTECTION.	99

TABLE OF CONTENTS – Continued

PARAGRAPH		PAGE
3.3.6.7.2.3	DIRECT VIEWING OPTICAL SYSTEMS.	99
3.3.6.8	ELECTRICAL SAFETY.	99
3.3.6.8.1	ELECTRICAL POWER CIRCUIT OVERLOADS.	99
3.3.6.8.1.1	CIRCUIT OVERLOAD PROTECTION.	99
3.3.6.8.1.2	PROTECTIVE DEVICE SIZING.	99
3.3.6.8.1.3	BENT PIN OR CONDUCTIVE CONTAMINATION.	99
3.3.6.8.2	CREW PROTECTION FOR ELECTRICAL SHOCK.	99
3.3.6.8.2.1	EVA CREW PROTECTION FOR ELECTRIC SHOCK.	100
3.3.6.8.3	RE APPLICATION OF POWER.	100
3.3.6.8.4	BATTERIES.	100
3.3.6.9	LIQUID PROPELLANT PROPULSION SYSTEMS.	100
3.3.6.9.1	INADVERTENT ENGINE FIRINGS.	100
3.3.6.9.1.1	PROPELLANT FLOW CONTROL DEVICES.	100
3.3.6.9.1.1.1	THRUSTER VALVES.	100
3.3.6.9.1.1.2	OPERATIONS.	101
3.3.6.9.1.2	ELECTRICAL INHIBITS.	101
3.3.6.9.1.3	MONITORING OF ELECTRICAL INHIBITS TO PREVENT CATASTROPHIC THRUSTER FIRING.	101
3.3.6.9.2	PROPELLANT OVERHEATING.	101
3.3.6.9.3	PROPELLANT LEAKAGE.	101
3.3.6.9.4	RESERVED.	101
3.3.6.9.5	PLUME IMPINGEMENT.	101
3.3.6.9.6	HAZARDOUS VENTING.	101
3.3.6.9.7	MONITORING PROPULSION SYSTEM STATUS.	102
3.3.6.9.8	THE RS MOTION CONTROL SYSTEM.	102
3.3.6.10	FIRE PROTECTION.	102
3.3.6.10.1	MANUAL ACTIVATION.	102
3.3.6.10.2	ISOLATION.	102
3.3.6.10.3	SUPPRESSION.	102
3.3.6.10.4	SUPPRESSANT.	102
3.3.6.10.4.1	SUPPRESSANT MATERIAL.	102
3.3.6.10.4.2	TOXICITY LEVEL.	102
3.3.6.10.5	CONTAMINATION.	102

TABLE OF CONTENTS – Continued

PARAGRAPH		PAGE
3.3.6.10.6	PORTABLE EQUIPMENT.	103
3.3.6.10.6.1	PROXIMITY TO ENTRANCE.	103
3.3.6.10.6.2	LOCATION WITHIN ELEMENT.	103
3.3.6.10.6.3	SET CO–LOCATION.	103
3.3.6.11	CONSTRAINTS.	103
3.3.6.11.1	PRESSURIZED VOLUME DEPRESSURIZATION AND REPRESSURIZATION TOLERANCE.	103
3.3.6.11.1.1	HAZARDS DURING DEPRESSURIZATION.	103
3.3.6.11.2	EMERGENCY EGRESS.	103
3.3.6.11.3	TRANSLATION ENTRY/EXIT PATHS.	103
3.3.6.11.4	COMPONENT HAZARDOUS ENERGY PROVISION.	103
3.3.6.11.5	HATCH OPENING.	104
3.3.6.11.6	HATCH OPERATIONS.	104
3.3.6.11.7	PINS OR DETACHABLE PARTS.	104
3.3.6.11.8	SINGLE CREWMEMBER ENTRY/EXIT.	104
3.3.6.11.9	RESERVED.	104
3.3.6.11.10	EQUIPMENT CLEARANCE FOR ENTRAPMENT HAZARD.	104
3.3.6.11.11	LIGHT FIXTURE.	104
3.3.6.12	HUMAN FACTORS.	104
3.3.6.12.1	INTERNAL VOLUME TOUCH TEMPERATURE.	104
3.3.6.12.1.1	CONTINUOUS CONTACT–HIGH TEMPERATURE.	104
3.3.6.12.1.2	INCIDENTAL OR MOMENTARY CONTACT–HIGH TEMPERATURE.	105
3.3.6.12.1.3	INTERNAL VOLUME LOW TOUCH TEMPERATURE.	105
3.3.6.12.2	EXTERNAL TOUCH TEMPERATURE FOR U.S. EVA.	105
3.3.6.12.3	EXTERNAL EDGE, CORNER, AND PROTRUSION RADII.	106
3.3.6.12.4	IVA INTERNAL CORNER AND EDGE PROTECTION.	107
3.3.6.12.5	RESERVED.	107
3.3.6.12.6	LATCHES.	107
3.3.6.12.6.1	DESIGN.	107
3.3.6.12.6.2	PROTECTIVE COVERS OR GUARDS.	107
3.3.6.12.7	SCREWS AND BOLTS.	107
3.3.6.12.8	SAFETY CRITICAL FASTENERS.	107

TABLE OF CONTENTS – Continued

PARAGRAPH		PAGE
3.3.6.12.9	LEVERS, CRANKS, HOOKS AND CONTROLS.	107
3.3.6.12.10	BURRS.	107
3.3.6.12.11	RESERVED.	107
3.3.6.12.12	PROTRUSIONS.	107
3.3.6.12.13	PINCH POINTS.	108
3.3.6.12.14	EMERGENCY INGRESS FOR A NON–IMPAIRED CREW MEMBER.	108
3.3.6.12.15	FLEX HOSES, LINES, AND CABLES.	108
3.3.6.12.16	TRANSLATION ROUTES AND ESTABLISHED WORKSITES.	108
3.3.6.12.16.1	PRIMARY TRANSLATION ROUTES AND ESTABLISHED WORKSITES.	108
3.3.6.12.16.2	SECONDARY TRANSLATION ROUTES AND ESTABLISHED WORKSITES.	108
3.3.6.12.16.3	EVA CREWMEMBER CONTACT ISOLATION.	109
3.3.6.12.17	MOVING OR ROTATING EQUIPMENT.	109
3.3.6.13	LAUNCH VEHICLE TRANSPORT – SPACE SHUTTLE LAUNCH.	109
3.3.6.13.1	SPACE SHUTTLE SERVICES.	109
3.3.6.13.1.1	FAULT TOLERANCE/SAFETY MARGINS.	109
3.3.6.13.1.2	TERMINATION OF SERVICES DUE TO ORBITER EMERGENCY CONDITIONS.	109
3.3.6.13.2	CRITICAL ORBITER SERVICES.	110
3.3.6.13.3	INADVERTENT DEPLOYMENT, SEPARATION, AND JETTISON FUNCTIONS.	110
3.3.6.13.4	PLANNED DEPLOYMENT/EXTENSION FUNCTIONS.	110
3.3.6.13.4.1	VIOLATION OF ORBITER PAYLOAD DOOR ENVELOPE.	110
3.3.6.13.4.2	METHOD OF FAULT TOLERANCE.	110
3.3.6.13.5	CONTINGENCY RETURN AND RAPID SAFING.	110
3.3.6.13.6	FLAMMABLE ATMOSPHERE.	110
3.3.6.13.6.1	RESERVED.	111
3.3.6.13.6.2	ELECTRICAL IGNITION SOURCES.	111
3.3.6.13.6.3	SURFACE TEMPERATURES.	111
3.3.6.13.6.4	CONDUCTIVE SURFACES.	111
3.3.6.13.7	ALLOWABLE RF RADIATION LEVELS.	111
3.3.6.13.8	LIGHTNING PROTECTION.	111

TABLE OF CONTENTS – Continued

PARAGRAPH		PAGE
3.3.6.13.9	ORBITER VENT/DUMP PROVISIONS.	111
3.3.6.13.9.1	RELEASE OR EJECTION OF HAZARDOUS MATERIALS.	111
3.3.6.13.9.2	FLUID SYSTEM CONTAINMENT.	111
3.3.6.13.10	SEALED COMPARTMENTS.	112
3.3.6.14	GROUND INTERFACES AND SERVICES – SPACE SHUTTLE LAUNCH.	112
3.3.6.14.1	MOVING PARTS.	112
3.3.6.14.2	EQUIPMENT REQUIRING ADJUSTMENT.	112
3.3.6.14.3	IGNITION OF ADJACENT MATERIALS.	112
3.3.6.14.4	ACCIDENTAL CONTACT WITH ELECTRICAL EQUIPMENT.	112
3.3.6.15	GROUND INTERFACES AND SERVICES – RUSSIAN LAUNCH VEHICLE.	112
3.3.6.16	GROUND SUPPORT EQUIPMENT SAFETY REQUIREMENTS FOR SS LAUNCH OF RS HARDWARE.	112
3.3.7	HUMAN ENGINEERING.	113
3.3.7.1	ANTHROPOMETRIC REQUIREMENTS.	113
3.3.7.2	EXTERNAL TASK LOCATION REQUIREMENTS.	113
3.3.7.3	STRENGTH REQUIREMENTS.	114
3.3.7.3.1	NORMAL OPERATIONS.	114
3.3.7.3.2	MAINTENANCE.	115
3.3.7.3.3	EMERGENCY CONTROLS.	115
3.3.7.4	GLOVED OPERATION.	115
3.3.7.5	LOCATION CODING.	116
3.3.7.5.1	ALPHANUMERIC CODING.	116
3.3.7.5.2	ACCOMMODATE CHANGES.	116
3.3.7.5.3	RESERVED.	116
3.3.7.5.4	EVA PRIMARY TRANSLATION PATH.	116
3.3.7.6	HOUSEKEEPING.	116
3.3.8	RESERVED.	116
3.3.9	SYSTEM SECURITY.	116
3.3.10	ENVIRONMENTAL CONSTRAINTS.	116
3.3.10.1	ACOUSTIC EMISSION LIMITS.	116
3.3.10.2	EXTERNAL CONTAMINATION RELEASES.	116

TABLE OF CONTENTS – Continued

PARAGRAPH		PAGE
3.3.11	DESIGN FOR REMOTE CONTROLLED EXTERNAL OPERATIONS.	117
3.3.11.1	SHUTTLE REMOTE MANIPULATOR SYSTEM (SRMS) ROBOTIC SUPPORT OF THE SPP.	117
3.3.11.2	SRMS TO SSRMS ROBOTIC HAND–OFF.	117
3.3.11.3	SPACE STATION ROBOTIC MANIPULATOR SUPPORT (SSRMS) OF THE SPP.	117
3.3.11.3.1	SPP SUPPORT OF THE POWER DATA GRAPPLE FIXTURE (PDGF).	118
3.3.12	DESIGN REQUIREMENTS.	119
3.3.12.1	STRUCTURAL DESIGN REQUIREMENTS.	119
3.3.12.1.1	STRUCTURAL DESIGN LIFE FOR METEOROID AND ORBITAL DEBRIS ANALYSES.	119
3.3.12.1.1.1	PROBABILITY OF NO PENETRATION.	120
3.3.12.1.1.1.1	STRUCTURE PENETRATION.	120
3.3.12.1.1.2	RESERVED.	120
3.3.12.1.2	EVA ON–ORBIT INDUCED LOADS.	120
3.3.12.1.3	ADDITIONAL M/OD SPACE PROTECTIONS.	120
3.3.12.2	WINDOW, GLASS AND CERAMIC STRUCTURAL DESIGN.	120
3.3.12.3	FRACTURE CONTROL.	120
3.3.12.4	STRUCTURAL DESIGN CONSTRAINTS.	120
3.3.12.4.1	FGB STRUCTURAL DESIGN CONSTRAINT.	121
3.3.12.4.2	SM STRUCTURAL DESIGN CONSTRAINT.	121
3.3.12.5	FLUID HANDLING REQUIREMENTS.	121
3.3.12.5.1	FLUID QUANTITY DETERMINATION.	121
3.3.12.5.2	INTERFACE HARDWARE.	121
3.3.12.5.3	FLEXIBLE LINES AND BELLOWS DESIGN.	121
3.3.12.6	KNOBS AND FASTENERS.	121
3.3.12.7	ATMOSPHERE LEAKAGE.	122
3.3.12.8	OPERATIONAL ALTITUDE.	122
3.3.12.9	PRECLUDE CONDENSATION.	122
3.3.12.10	VENTING/DUMPING.	122
3.3.13	EVA EQUIPMENT HANDLING CAPABILITIES.	122
3.3.14	MIL–STD–1553 DATA BUS ADDRESSES.	123

TABLE OF CONTENTS – Continued

PARAGRAPH		PAGE
3.3.15	MIL–STD–1553 DATA BUS CONSTRAINS.	123
3.3.15.1	SSQ COMPONENTS.	123
3.3.15.1.1	BUS COUPLER TYPE.	123
3.3.15.2	BUS STUB LENGTH.	124
3.3.15.3	BUS COUPLING.	124
3.3.16	TERMINAL INTERFACE UNITS.	125
3.3.16.1	TIU MULTIPLE BUS ISOLATION.	125
3.3.17	RS NOT–TO–EXCEED BUS LENGTH.	125
3.4	COMPUTER RESOURCE REQUIREMENTS.	125
3.4.1	COMPUTER HARDWARE DESIGN CONSIDERATIONS.	125
3.4.2	FLEXIBILITY AND EXPANSION.	125
3.5	LOGISTICS.	126
3.5.1	MAINTENANCE.	126
3.5.1.1	GENERAL MAINTENANCE REQUIREMENTS.	126
3.5.1.1.1	RS LOGISTICS INFRASTRUCTURE.	126
3.5.1.1.2	ORU MAINTENANCE LEVEL DISTRIBUTION.	126
3.5.1.2	PERFORM ON–ORBIT MAINTENANCE.	126
3.5.1.2.1	ORU REMOVAL AND REPLACEMENT.	126
3.5.1.2.2	IN SITU MAINTENANCE.	126
3.5.1.2.3	MAINTENANCE COORDINATION.	126
3.5.1.2.4	ORU PACKAGING.	126
3.5.1.2.5	PROCEDURE STORAGE.	126
3.5.1.2.6	LIQUID OR GAS VENTING.	127
3.5.2	SUPPLY.	127
3.5.2.1	GENERAL SUPPLY REQUIREMENTS.	127
3.5.2.1.1	SUSTAINING FLEET RESOURCES.	127
3.5.2.1.2	MISSED RESUPPLY CREW PROVISIONS.	127
3.5.2.1.3	MAINTENANCE RESOURCES.	127
3.5.2.1.4	ON–ORBIT PROPELLANT RESERVE.	127
3.5.2.2	PROVIDE INVENTORY MANAGEMENT CAPABILITY.	127
3.5.2.2.1	CRITICAL ITEM STORAGE.	127
3.6	RESERVED.	128
3.7	CHARACTERISTICS OF MAJOR FUNCTIONAL ELEMENTS.	128

TABLE OF CONTENTS – Continued

PARAGRAPH		PAGE
3.7.1	FUNCTIONAL CARGO BLOCK.	128
3.7.1.1	PURPOSE.	128
3.7.1.2	DESCRIPTION.	128
3.7.1.3	CAPABILITIES.	128
3.7.1.3.1	CONTROL TOTAL PRESSURE.	128
3.7.1.3.1.1	MONITOR TOTAL PRESSURE.	128
3.7.1.3.2	CONTROL OXYGEN PARTIAL PRESSURE.	129
3.7.1.3.2.1	MONITOR OXYGEN PARTIAL PRESSURE.	129
3.7.1.3.3	FGB TO PMA1 LEAK SEAL MONITORING AND REPRESSURIZATION.	129
3.7.1.3.4	EQUALIZE PRESSURE.	129
3.7.1.3.4.1	CONTROL ATMOSPHERE TEMPERATURE.	129
3.7.1.3.4.1.1	MONITOR ATMOSPHERE TEMPERATURE.	129
3.7.1.3.4.1.2	REMOVE ATMOSPHERE HEAT.	129
3.7.1.3.4.2	CONTROL ATMOSPHERE MOISTURE.	129
3.7.1.3.4.2.1	MONITOR HUMIDITY.	129
3.7.1.3.5	CIRCULATE ATMOSPHERE.	130
3.7.1.3.5.1	CIRCULATE ATMOSPHERE INTRA–MODULE.	130
3.7.1.3.5.2	CIRCULATE ATMOSPHERE INTER–MODULE.	130
3.7.1.3.6	ISOLATE TO RECOVERY LEVEL.	130
3.7.1.3.7	RECOVER LOST FUNCTION.	132
3.7.1.3.8	SAFE.	132
3.7.1.3.9	RESERVED.	133
3.7.1.3.10	RESERVED.	133
3.7.1.3.11	DISTRIBUTE TIME.	133
3.7.1.3.12	PROVIDE DATA TO CREW.	133
3.7.1.3.13	ACQUIRE FUNCTION STATUS DATA.	133
3.7.1.3.13.1	COLLECT FUNCTION STATUS DATA.	133
3.7.1.3.14	ASSESS FUNCTION STATUS DATA.	133
3.7.1.3.15	PROVIDE CREW CONTROL INTERFACE.	133
3.7.1.3.16	RESERVED.	134
3.7.1.3.17	RESPOND TO FIRE.	134
3.7.1.3.17.1	DETECT FIRE EVENT.	134
3.7.1.3.17.2	ISOLATE FIRE CONTROL ZONE.	134

TABLE OF CONTENTS – Continued

PARAGRAPH		PAGE
3.7.1.3.17.3	EXTINGUISH FIRE.	134
3.7.1.3.17.4	RECOVER FROM FIRE.	134
3.7.1.3.18	RESERVED.	134
3.7.1.3.19	RESPOND TO HAZARDOUS ATMOSPHERE.	134
3.7.1.3.20	PROVIDE ELECTRICAL POWER.	134
3.7.1.3.20.1	GENERATE POWER.	134
3.7.1.3.20.2	DISTRIBUTE POWER.	135
3.7.1.3.20.3	STORE ENERGY.	135
3.7.1.3.21	RESERVED.	135
3.7.1.3.22	MAINTAIN THERMAL CONDITIONING.	135
3.7.1.3.22.1	COLLECT THERMAL ENERGY.	135
3.7.1.3.22.2	TRANSMIT THERMAL ENERGY.	135
3.7.1.3.22.3	DISPOSE OF THERMAL ENERGY.	135
3.7.1.3.22.4	PASSIVE THERMAL ENERGY.	135
3.7.1.3.23	RESERVED.	136
3.7.1.3.24	SUPPORT INTERNAL CREW RESTRAINT AND MOBILITY.	136
3.7.1.3.25	CONTROL CARBON DIOXIDE.	137
3.7.1.3.25.1	MONITOR CARBON DIOXIDE.	137
3.7.1.3.26	CONTROL AIRBORNE PARTICULATE CONTAMINANTS.	137
3.7.1.3.26.1	REMOVE AIRBORNE PARTICULATE CONTAMINANTS.	137
3.7.1.3.27	PROVIDE REMOTE INTERNAL VISUAL ACCESS.	137
3.7.1.3.27.1	TRANSMIT VIDEO SIGNAL.	137
3.7.1.3.27.2	RECEIVE VIDEO SIGNAL.	137
3.7.1.3.28	TRANSMIT VOICE COMMUNICATIONS.	138
3.7.1.3.28.1	TRANSMIT HARDWIRE.	138
3.7.1.3.29	RECEIVE VOICE COMMUNICATION.	138
3.7.1.3.29.1	RECEIVE HARDWIRE.	138
3.7.1.3.30	SUPPORT UPLINKED DATA.	138
3.7.1.3.30.1	RECEIVE UPLINKED DATA.	138
3.7.1.3.30.2	PREPARE UPLINKED DATA FOR ON–BOARD DISTRIBUTION.	139
3.7.1.3.30.3	DISTRIBUTE UPLINKED DATA.	139
3.7.1.3.31	PROVIDE DATA FOR DOWNLINK.	139
3.7.1.3.31.1	PREPARE DATA FOR DOWNLINK.	139

TABLE OF CONTENTS – Continued

PARAGRAPH		PAGE
3.7.1.3.31.2	TRANSMIT DATA FOR DOWNLINK.	139
3.7.1.3.32	SUPPORT INTERNAL EQUIPMENT TRANSLATION.	139
3.7.1.3.33	SUPPORT INTERNAL EQUIPMENT REMOVAL AND REPLACEMENT.	139
3.7.1.3.34	SUPPORT INTERNAL EQUIPMENT IDENTIFICATION.	139
3.7.1.3.35	SUPPORT INTERNAL EQUIPMENT RESTRAINT.	140
3.7.1.3.36	EXECUTE MANEUVER GUIDANCE.	140
3.7.1.3.37	EXECUTE TRANSLATION THRUST.	140
3.7.1.3.38	CONTROL ATTITUDE – PROPULSIVE.	141
3.7.1.3.38.1	CONTROL ATTITUDE PROPULSIVELY IN THE CONFIGURATIONS INDICATED IN TABLEXVIII.	143
3.7.1.3.38.2	INDICATE STATUS OF MOTION CONTROL SYSTEM.	145
3.7.1.3.39	LIMIT ACCELERATIONS.	145
3.7.1.3.40	LIGHT FGB.	146
3.7.1.3.40.1	CONTROL INTERNAL LIGHTING.	146
3.7.1.3.40.2	ILLUMINATE INTERNAL AREAS.	146
3.7.1.3.41	SUPPORT HOUSEKEEPING.	146
3.7.1.3.42	STORE INTERNAL EQUIPMENT.	146
3.7.1.3.43	SUPPORT ORBITAL REPLACEMENT UNIT REPAIR.	147
3.7.1.3.44	CAPABILITY: PROVIDE AUTOMATED COLLISION AVOIDANCE MANEUVERS.(RSS 3.2.1.1.6)	147
3.7.1.3.45	CAPABILITY: PROVIDE DOCKING STATUS.	147
3.7.1.3.46	CAPABILITY: FGB RELATIVE NAVIGATION SUPPORT.	148
3.7.1.3.47	CAPABILITY: FGB VIDEO TRANSMISSION.	148
3.7.1.3.48	AUTOMATIC POWER REDUCTION.	148
3.7.1.3.49	COMMUNICATION WITH US AIRLOCK ORLAN SUITS.	148
3.7.2	SERVICE MODULE	148
3.7.2.1	PURPOSE.	148
3.7.2.2	DESCRIPTION.	148
3.7.2.3	CAPABILITIES.	149
3.7.2.3.1	CONTROL TOTAL PRESSURE.	149
3.7.2.3.1.1	MONITOR TOTAL PRESSURE.	149
3.7.2.3.2	CONTROL OXYGEN PARTIAL PRESSURE.	149
3.7.2.3.2.1	MONITOR OXYGEN PARTIAL PRESSURE.	149

TABLE OF CONTENTS – Continued

PARAGRAPH		PAGE
3.7.2.3.2.2	INTRODUCE OXYGEN.	149
3.7.2.3.3	RESERVED.	149
3.7.2.3.4	EQUALIZE PRESSURE.	149
3.7.2.3.5	CONTROL ATMOSPHERE TEMPERATURE.	149
3.7.2.3.5.1	MONITOR ATMOSPHERE TEMPERATURE.	149
3.7.2.3.5.2	REMOVE ATMOSPHERIC HEAT.	149
3.7.2.3.6	CONTROL ATMOSPHERE MOISTURE.	150
3.7.2.3.6.1	REMOVE EXCESS MOISTURE FROM CABIN ATMOSPHERE.	150
3.7.2.3.6.2	DISPOSE OF REMOVED MOISTURE.	150
3.7.2.3.6.3	MONITOR HUMIDITY.	150
3.7.2.3.7	CIRCULATE ATMOSPHERE.	150
3.7.2.3.7.1	CIRCULATE ATMOSPHERE INTRA–MODULE.	150
3.7.2.3.7.2	CIRCULATE ATMOSPHERE INTER–MODULE.	150
3.7.2.3.8	LIGHT STATION.	150
3.7.2.3.8.1	CONTROL INTERNAL LIGHTING.	150
3.7.2.3.8.2	ACCOMMODATE ON SM A SOURCE OF LIGHT (NAVIGATION LIGHT) FOR SHUTTLE STAR TRACKER.	150
3.7.2.3.8.3	ILLUMINATE INTERNAL AREA.	151
3.7.2.3.9	ISOLATE TO RECOVERY LEVEL.	151
3.7.2.3.10	RECOVER LOST FUNCTION.	151
3.7.2.3.11	SAFE.	151
3.7.2.3.12	MAINTAIN STATION MODE.	151
3.7.2.3.13	TRANSITION STATION MODES.	152
3.7.2.3.14	PROVIDE DATA TO CREW.	153
3.7.2.3.15	ACCEPT CREW INPUTS AND COMMANDS.	153
3.7.2.3.16	ACQUIRE FUNCTION STATUS DATA.	153
3.7.2.3.17	ASSESS FUNCTION STATUS DATA.	154
3.7.2.3.18	RESPOND TO FIRE.	154
3.7.2.3.18.1	DETECT FIRE EVENT.	154
3.7.2.3.18.2	ISOLATE FIRE CONTROL ZONE.	154
3.7.2.3.18.3	EXTINGUISH FIRE.	154
3.7.2.3.18.4	RECOVER FROM FIRE.	154
3.7.2.3.19	RESPOND TO DECOMPRESSION.	155

TABLE OF CONTENTS – Continued

PARAGRAPH		PAGE
3.7.2.3.19.1	DETECT RAPID DECOMPRESSION.	155
3.7.2.3.19.2	ISOLATE RAPID DECOMPRESSION.	155
3.7.2.3.20	RESPOND TO HAZARDOUS ATMOSPHERE.	155
3.7.2.3.21	MAINTAIN THERMAL CONDITIONING.	155
3.7.2.3.21.1	COLLECT THERMAL ENERGY.	155
3.7.2.3.21.2	TRANSMIT THERMAL ENERGY.	155
3.7.2.3.21.3	DISPOSE OF THERMAL ENERGY.	155
3.7.2.3.22	PROVIDE CREW CONTROL INTERFACE.	155
3.7.2.3.23	DISTRIBUTE TIME.	156
3.7.2.3.24	ACCOMMODATE CREW HYGIENE AND WASTES.	156
3.7.2.3.25	SUPPORT RADIATION EXPOSURE MONITORING.	156
3.7.2.3.26	ACCOMMODATE CREW PRIVACY.	156
3.7.2.3.27	SUPPORT CREW PERSONAL ITEMS.	156
3.7.2.3.28	SUPPORT HOUSEKEEPING.	157
3.7.2.3.29	SUPPORT CREW HEALTH.	157
3.7.2.3.29.1	MONITOR CREW HEALTH.	157
3.7.2.3.29.2	RESPOND TO CREW ILLNESS OR INJURY.	157
3.7.2.3.29.3	PROVIDE PREVENTIVE CREW HEALTH CARE.	157
3.7.2.3.29.4	SUPPORT MICROGRAVITY COUNTERMEASURES AND EXERCISE.	157
3.7.2.3.30	SUPPORT FOOD AND WATER CONSUMPTION AND CLEANUP.	157
3.7.2.3.31	SUPPORT FOOD PROCESSING.	157
3.7.2.3.32	PROVIDE FOOD.	158
3.7.2.3.33	SUPPORT INTERNAL CREW RESTRAINT AND MOBILITY.	158
3.7.2.3.34	CONTROL CARBON DIOXIDE.	159
3.7.2.3.34.1	REMOVE CARBON DIOXIDE.	159
3.7.2.3.34.2	DISPOSE OF CARBON DIOXIDE.	159
3.7.2.3.35	CONTROL GASEOUS CONTAMINANTS.	159
3.7.2.3.35.1	REMOVE GASEOUS CONTAMINANTS.	159
3.7.2.3.35.2	DISPOSE OF GASEOUS CONTAMINANTS.	160
3.7.2.3.36	CONTROL AIRBORNE PARTICULATE CONTAMINANTS.	160
3.7.2.3.36.1	REMOVE AIRBORNE PARTICULATE CONTAMINANTS.	160
3.7.2.3.37	CONTROL AIRBORNE MICROBIAL GROWTH.	160

TABLE OF CONTENTS – Continued

PARAGRAPH		PAGE
3.7.2.3.37.1	REMOVE AIRBORNE MICROBES.	160
3.7.2.3.38	PROVIDE WATER FOR CREW USE.	160
3.7.2.3.38.1	SUPPLY WATER FOR POTABLE USE.	160
3.7.2.3.38.2	SUPPLY WATER FOR HYGIENE USE.	160
3.7.2.3.38.3	WASTE WATER MANAGEMENT.	161
3.7.2.3.38.4	MONITOR WATER QUALITY.	161
3.7.2.3.39	PROVIDE DIRECT VISUAL ACCESS.	161
3.7.2.3.40	PROVIDE REMOTE INTERNAL VISUAL ACCESS.	161
3.7.2.3.40.1	CREATE VIDEO SIGNAL.	161
3.7.2.3.40.2	RESERVED.	161
3.7.2.3.41	TRANSMIT VOICE COMMUNICATIONS.	161
3.7.2.3.41.1	TRANSMIT HARDWIRE.	161
3.7.2.3.42	RECEIVE VOICE COMMUNICATION.	162
3.7.2.3.42.1	RECEIVE HARDWIRE.	162
3.7.2.3.43	DETERMINE STATE VECTOR AND ATTITUDE.	162
3.7.2.3.43.1	PROVIDE STATE VECTOR AND ATTITUDE.	162
3.7.2.3.43.2	CAPABILITY: GENERATE POINTING & SUPPORT DATA.	163
3.7.2.3.44	MAINTAIN ATTITUDE – NONPROPULSIVE.	163
3.7.2.3.45	SUPPORT UPLINKED DATA.	164
3.7.2.3.45.1	RECEIVE UPLINKED DATA.	164
3.7.2.3.45.2	PREPARE UPLINKED DATA FOR ON–BOARD DISTRIBUTION.	164
3.7.2.3.45.3	DISTRIBUTE UPLINKED DATA.	164
3.7.2.3.46	PROVIDE DATA FOR DOWNLINK.	164
3.7.2.3.46.1	PREPARE DATA FOR DOWNLINK.	164
3.7.2.3.46.2	TRANSMIT DATA FOR DOWNLINK.	165
3.7.2.3.47	SUPPORT INTERNAL EQUIPMENT TRANSLATION.	165
3.7.2.3.48	SUPPORT INTERNAL EQUIPMENT REMOVAL AND REPLACEMENT.	165
3.7.2.3.49	SUPPORT INTERNAL EQUIPMENT IDENTIFICATION.	165
3.7.2.3.50	SUPPORT INTERNAL EQUIPMENT RESTRAINT.	165
3.7.2.3.51	SUPPORT ORBITAL REPLACEABLE UNIT REPAIR.	165
3.7.2.3.52	STORE INTERNAL EQUIPMENT.	165

TABLE OF CONTENTS – Continued

PARAGRAPH		PAGE
3.7.2.3.53	SUPPORT EXTERNAL VEHICLE INPUT DATA FOR PROXIMITY OPERATIONS.	166
3.7.2.3.53.1	RECEIVE EXTERNAL VEHICLE INPUT DATA.	166
3.7.2.3.53.2	PREPARE EXTERNAL INPUT DATA FOR ON–BOARD DISTRIBUTION.	166
3.7.2.3.54	PROVIDE DATA FOR EXTERNAL VEHICLES FOR PROXIMITY OPERATIONS.	166
3.7.2.3.54.1	PREPARE DATA FOR EXTERNAL VEHICLES.	166
3.7.2.3.54.2	TRANSMIT DATA TO EXTERNAL VEHICLES.	166
3.7.2.3.55	SUPPORT EXTERNAL VEHICLE WAVE–OFF.	166
3.7.2.3.55.1	DETERMINE EXTERNAL VEHICLE WAVE–OFF.	166
3.7.2.3.55.2	COMMUNICATE WAVE–OFF TO EXTERNAL VEHICLE.	166
3.7.2.3.56	EXECUTE TRANSLATION MANEUVERS.	166
3.7.2.3.56.1	EXECUTE MANEUVER GUIDANCE.	166
3.7.2.3.56.2	EXECUTE TRANSLATION THRUST.	167
3.7.2.3.57	CONTROL ATTITUDE – PROPULSIVE.	169
3.7.2.3.58	PROVIDE DESATURATION TORQUE.	172
3.7.2.3.59	PROVIDE DEPRESSURIZATION CAPABILITIES.	173
3.7.2.3.60	COMMUNICATIONS WITH U.S. AIRLOCK ORLAN SUITS.	173
3.7.2.3.61	SUPPORT ATTITUDE CONTROL HANDOVER OPERATIONS.	174
3.7.3	RESERVED.	174
3.7.4	RESERVED	174
3.7.5	RESERVED	174
3.7.6	SOYUZ VEHICLE.	174
3.7.6.1	PURPOSE.	174
3.7.6.2	DESCRIPTION.	174
3.7.6.3	PHYSICAL CHARACTERISTICS.	174
3.7.6.3.1	RESERVED.	174
3.7.6.3.2	RESERVED.	174
3.7.6.3.3	SOYUZ VEHICLE DIMENSIONAL ENVELOPE.	174
3.7.6.3.4	SOYUZ VEHICLE BODY COORDINATE SYSTEM.	174
3.7.6.3.5	SOYUZ VEHICLE CREW DELIVERY AND RETURN.	174
3.7.6.3.5.1	SCHEDULED CREW DELIVERY AND RETURN.	174
3.7.6.3.5.2	SUPPORT UNPLANNED CREW RETURN.	177

TABLE OF CONTENTS – Continued

PARAGRAPH		PAGE
3.7.6.3.6	PERSONNEL SIZE AND MASS.	177
3.7.6.4	SAFETY.	182
3.7.6.4.1	INTERNAL VOLUME TOUCH TEMPERATURE.	182
3.7.6.4.1.1	INTERNAL VOLUME HIGH TEMPERATURE.	182
3.7.6.4.1.2	INTERNAL VOLUME LOW TEMPERATURE.	182
3.7.6.4.2	SINGLE FAILURE TOLERANCE.	182
3.7.6.4.3	SAFE.	182
3.7.6.4.4	COMPUTER CONTROL OF HAZARDOUS FUNCTIONS.	182
3.7.6.4.5	HAZARDS DURING DEPRESSURIZATION.	182
3.7.6.4.6	HATCH OPENING.	183
3.7.6.5	CAPABILITIES.	183
3.7.6.5.1	CONTROL ATMOSPHERIC PRESSURE.	183
3.7.6.5.1.1	CONTROL TOTAL PRESSURE.	183
3.7.6.5.1.2	CONTROL OXYGEN PARTIAL PRESSURE.	183
3.7.6.5.1.3	EQUALIZE PRESSURE.	183
3.7.6.5.2	MAINTAIN THERMAL CONDITIONING.	183
3.7.6.5.2.1	THERMAL CONTROL SYSTEM FLUID STANDARDS.	183
3.7.6.5.3	CONTROL ATMOSPHERE TEMPERATURE.	183
3.7.6.5.4	CONTROL ATMOSPHERE MOISTURE.	184
3.7.6.5.5	CIRCULATE ATMOSPHERE.	184
3.7.6.5.6	SUPPORT FOOD AND WATER CONSUMPTION.	184
3.7.6.5.7	CONTROL CARBON DIOXIDE.	184
3.7.6.5.8	PROVIDE DATA FOR DOWNLINK.	184
3.7.6.5.8.1	TRANSMISSION OF SUBSYSTEM STATUS WHILE ATTACHED TO RS.	184
3.7.6.5.8.2	SOYUZ VEHICLE READINESS INFORMATION.	184
3.7.6.5.8.3	VEHICLE OPERATIONAL SUPPORT.	184
3.7.6.5.9	SUPPORT CREW DELIVERY AND RETURN.	185
3.7.6.5.9.1	ENVIRONMENT OF HABITABLE VOLUMES.	185
3.7.6.5.9.2	PROVIDE TRANSLATION PATH.	185
3.7.6.5.9.3	LAUNCH AND DELIVERY.	185
3.7.6.5.9.3.1	EXECUTE TRANSLATION MANEUVERS.	185
3.7.6.5.9.3.2	PROXIMITY OPERATIONS.	186

TABLE OF CONTENTS – Continued

PARAGRAPH		PAGE
3.7.6.5.9.3.2.1	AUTOMATED COLLISION AVOIDANCE MANEUVERS.	186
3.7.6.5.9.3.2.2	MISSION PLANNING – RENDEZVOUS AND DOCKING.	186
3.7.6.5.9.3.2.3	SUPPORT EXTERNAL VEHICLE TO ISS RELATIVE NAVIGATION.	186
3.7.6.5.9.3.3	SOYUZ VEHICLE DOCKING INDICATION.	186
3.7.6.5.9.3.4	SOYUZ VEHICLE VOICE COMMUNICATIONS.	186
3.7.6.5.9.3.5	SOYUZ VEHICLE VIDEO TRANSMISSION.	186
3.7.6.5.9.3.6	DOCKING MECHANISM AND CONTACT CONDITIONS.	186
3.7.6.5.9.3.7	SOYUZ VEHICLE RENDEZVOUS ABORT COMMAND ACCEPTANCE.	187
3.7.6.5.9.3.8	LAUNCH.	187
3.7.6.5.9.3.9	OPERATIONAL ALTITUDE.	187
3.7.6.5.9.4	ACTIVATION AND SEPARATION.	187
3.7.6.5.9.4.1	RESERVED.	187
3.7.6.5.9.4.2	ACTIVATION INDEPENDENT OF ISS AND THE GROUND.	187
3.7.6.5.9.4.3	RESERVED.	187
3.7.6.5.9.4.4	INDEPENDENT SEPARATION CAPABILITY.	187
3.7.6.5.9.4.5	SOYUZ VEHICLE INITIATED SEPARATION.	187
3.7.6.5.9.4.6	DISCONNECTION OF UTILITIES.	187
3.7.6.5.9.4.7	RESERVED.	188
3.7.6.5.9.4.8	RESERVED.	188
3.7.6.5.9.4.9	SEPARATION CLEARANCE RANGE.	188
3.7.6.5.9.4.10	SEPARATION FROM A TUMBLING STATION.	188
3.7.6.5.9.5	RETURN MISSION.	188
3.7.6.5.9.5.1	CREW INTERVENTION.	188
3.7.6.5.9.5.2	AUTONOMOUS SOYUZ VEHICLE OPERATION.	188
3.7.6.5.9.5.3	TRANSMISSION OF VEHICLE STATUS AFTER SEPARATION.	188
3.7.6.5.9.5.4	ORBIT INCLINATION.	189
3.7.6.5.9.5.5	STATE VECTOR COMPATIBILITY.	189
3.7.6.5.9.5.6	RECOVERY FROM MISSED DEORBIT OPPORTUNITY.	189
3.7.6.5.9.5.7	ENTRY ACCELERATIONS, NOMINAL MODE.	189
3.7.6.5.9.5.8	LANDING CROSS RANGE.	189
3.7.6.5.9.5.9	LANDING ACCURACY AT THE GROUND.	189
3.7.6.5.9.5.10	LANDING.	189

TABLE OF CONTENTS – Continued

PARAGRAPH		PAGE
3.7.6.5.9.5.11	AUTOMATED OPERATIONS.	189
3.7.6.5.9.5.12	LANDING OPPORTUNITIES.	190
3.7.6.5.9.5.13	LANDING ACCELERATIONS.	190
3.7.6.5.9.5.14	RESERVED.	190
3.7.6.5.9.5.15	SUPPORT FROM ISOLATION TO LANDING.	190
3.7.6.5.9.5.16	RESERVED.	190
3.7.6.5.9.5.17	GROUND SUPPORT TO FLIGHT OPERATIONS.	190
3.7.6.5.9.6	RESERVED.	190
3.7.6.5.9.6.1	RESERVED.	190
3.7.6.5.9.6.2	CREW TRANSPORT TIME FROM SOYUZ VEHICLE SEPARATION.	190
3.7.6.5.9.6.3	RESERVED.	190
3.7.6.5.9.6.4	COMMUNICATIONS WITH MISSION SUPPORT.	190
3.7.6.5.9.6.5	RESERVED.	191
3.7.6.5.9.6.6	ENTRY ACCELERATIONS.	191
3.7.6.5.9.7	RESERVED.	191
3.7.6.5.9.7.1	ATTACHED COMMUNICATIONS WITH MISSION SUPPORT.	191
3.7.6.5.9.7.2	ATTACHED SOYUZ VEHICLE – SOYUZ VEHICLE COMMUNICATIONS.	191
3.7.6.5.9.7.3	DETACHED SOYUZ VEHICLE TO SOYUZ VEHICLE COMMUNICATION.	191
3.7.6.5.9.7.4	ATTACHED SOYUZ VEHICLE/RS VOICE COMMUNICATIONS.	191
3.7.6.5.9.7.5	SEPARATION TIME LIMIT.	191
3.7.6.5.9.8	CREW RECOVERY, VEHICLE RECOVERY, AND POST–RECOVERY OPERATIONS.	191
3.7.6.5.9.8.1	RESERVED.	191
3.7.6.5.9.8.2	POST LANDING SUPPORT.	191
3.7.6.5.9.8.3	VEHICLE LOCATION AID.	192
3.7.6.5.9.8.4	RESERVED.	192
3.7.6.5.9.8.5	RESERVED.	192
3.7.6.5.9.8.6	RESERVED.	192
3.7.6.5.9.8.7	CREW RESCUE PROCEDURES.	192
3.7.6.5.9.8.8	VEHICLE RECOVERY PROCEDURES.	192
3.7.6.5.10	TRAINING.	192

TABLE OF CONTENTS – Continued

PARAGRAPH		PAGE
3.7.6.5.10.1	RESERVED.	192
3.7.6.5.10.2	PROCEDURES TRAINING.	192
3.7.6.5.10.3	FUNCTIONAL SYSTEMS TRAINING.	192
3.7.6.5.11	LIGHT SOYUZ VEHICLE.	192
3.7.6.5.11.1	CONTROL INTERNAL LIGHTING.	192
3.7.6.5.11.2	ILLUMINATE INTERNAL AREAS.	192
3.7.6.5.12	SERVICE LIFE.	193
3.7.6.5.12.1	SEAL LIFE.	193
3.7.7	CARGO VEHICLE.	193
3.7.7.1	PURPOSE.	193
3.7.7.2	DESCRIPTION.	193
3.7.7.3	CAPABILITIES.	193
3.7.7.3.1	CONTROL TOTAL PRESSURE.	193
3.7.7.3.1.1	MONITOR TOTAL PRESSURE.	193
3.7.7.3.1.2	CONTROL NITROGEN INTRODUCTION.	193
3.7.7.3.2	LIGHT CARGO VEHICLE.	193
3.7.7.3.2.1	CONTROL INTERNAL LIGHTING.	193
3.7.7.3.2.2	ILLUMINATE INTERNAL AREAS.	194
3.7.7.3.3	RELIEVE OVER PRESSURE.	194
3.7.7.3.4	EQUALIZE PRESSURE.	194
3.7.7.3.5	SAFETY.	194
3.7.7.3.5.1	INTERNAL VOLUME TOUCH TEMPERATURE.	194
3.7.7.3.5.1.1	INTERNAL VOLUME HIGH TEMPERATURE.	194
3.7.7.3.5.1.2	INTERNAL LOW VOLUME TEMPERATURE.	194
3.7.7.3.5.2	SAFE.	194
3.7.7.3.5.3	COMPUTER CONTROL OF HAZARDOUS FUNCTIONS.	194
3.7.7.3.5.4	HATCH OPENING.	195
3.7.7.3.6	VIDEO TRANSMISSION.	195
3.7.7.3.7	DETERMINE STATE VECTOR AND ATTITUDE.	195
3.7.7.3.8	SUPPORT UPLINKED DATA.	195
3.7.7.3.8.1	RECEIVE UPLINKED DATA.	195
3.7.7.3.9	PROVIDE DATA FOR DOWNLINK.	195
3.7.7.3.9.1	PREPARE DATA FOR DOWNLINK.	195

TABLE OF CONTENTS – Continued

PARAGRAPH		PAGE
3.7.7.3.9.2	TRANSMIT DATA FOR DOWNLINK.	195
3.7.7.3.10	EXECUTE MANEUVER GUIDANCE.	195
3.7.7.3.11	EXECUTE TRANSLATION THRUST.	196
3.7.7.3.12	CONTROL ATTITUDE – PROPULSIVE.	196
3.7.7.3.13	TRANSPORT CARGO.	197
3.7.7.3.14	MAINTAIN THERMAL CONDITIONING.	197
3.7.7.3.14.1	THERMAL CONTROL SYSTEM FLUID STANDARDS.	197
3.7.7.3.15	PROPELLANT TRANSFER.	197
3.7.7.3.16	TRASH DISPOSAL.	198
3.7.7.3.17	CAPABILITY: SUPPORT PRELAUNCH OPERATIONS.	198
3.7.7.3.17.1	LOAD/UNLOAD CARGO ITEMS.	198
3.7.7.3.17.2	SUPPORT SYSTEM CHECKOUT AND MONITORING.	198
3.7.7.3.18	CARGO VEHICLE DOCKING INDICATION.	198
3.7.7.3.19	INDEPENDENT SEPARATION CAPABILITY.	198
3.7.7.3.20	DISCONNECTION OF UTILITIES.	198
3.7.7.3.21	SEPARATION CLEARANCE RANGE.	198
3.7.7.3.22	CAPABILITY: PROVIDE AUTOMATED COLLISION AVOIDANCE MANEUVERS.	198
3.7.7.3.23	CAPABILITY: MISSION PLANNING – RENDEZVOUS AND DOCKING.	199
3.7.7.3.24	SERVICE LIFE.	199
3.7.7.3.24.1	SEAL LIFE.	199
3.7.7.3.25	OPERATIONAL ALTITUDE.	199
3.7.7.3.26	DOCKING MECHANISM AND CONTACT CONDITIONS.	199
3.7.7.3.27	SUPPORT EXTERNAL VEHICLE TO ISS RELATIVE NAVIGATION.	199
3.7.8	RESERVED.	199
3.7.9	RESERVED.	199
3.7.10	PDGF STAND INTERFACE ASSEMBLY.	199
3.7.10.1	PURPOSE.	199
3.7.10.2	DESCRIPTION.	200
3.7.10.3.1	PDG STAND INTERFACE ASSEMBLY.	200
3.7.10.3.1.1	PDG STAND INTERFACE INSTALLATION.	200
3.7.10.3.1.2	ACCOMMODATE MOBILE SERVICING SYSTEM.	200

TABLE OF CONTENTS – Continued

PARAGRAPH		PAGE
3.7.10.3.1.2.1	PDGF STAND LOAD/STIFFNESS LIMITS.	200
3.7.10.3.1.3	PDGF MOUNTING RING ASSEMBLY.	200
3.7.10.3.1.4	VIDEO SIGNAL CONVERTER (VSC) ACCOMMODATION.	200
3.7.10.3.2	PDGF VIDEO, POWER, DATA DISTRIBUTION.	201
3.7.10.3.2.1	PDGF VIDEO.	201
3.7.10.3.2.2	PDGF POWER.	201
3.7.10.3.2.3	MIL–STD–1553 DATA.	201
3.7.10.3.3	SSRMS ON FGB PDGF OPERATIONS.	201
3.8.	PRECEDENCE.	201
4.0	VERIFICATION.	202
4.1	GENERAL.	202
4.2	VERIFICATION PROCESS.	202
4.2.1	METHODS.	202
4.2.2	RESPONSIBILITY FOR VERIFICATION.	203
4.3.2	CHARACTERISTICS.	204
4.3.2.1	PERFORMANCE CHARACTERISTICS.	204
4.3.2.1.1	STATE – PERFORM MISSION.	204
4.3.2.1.1.1	MODE – STANDARD.	204
4.3.2.1.1.1.1	CONTROL ATMOSPHERIC PRESSURE.	204
4.3.2.1.1.1.1.1	CONTROL TOTAL PRESSURE.	204
4.3.2.1.1.1.1.2	CONTROL OXYGEN PARTIAL PRESSURE.	204
4.3.2.1.1.1.1.3	RELIEVE OVERPRESSURE.	205
4.3.2.1.1.1.1.4	EQUALIZE PRESSURE.	205
4.3.2.1.1.1.2	CONDITION ATMOSPHERE.	205
4.3.2.1.1.1.2.1	CONTROL ATMOSPHERE TEMPERATURE.	205
4.3.2.1.1.1.2.2	CONTROL ATMOSPHERE MOISTURE.	205
4.3.2.1.1.1.2.3	CIRCULATE ATMOSPHERE.	205
4.3.2.1.1.1.3	LIGHT STATION.	206
4.3.2.1.1.1.3.1	CONTROL INTERNAL LIGHTING.	206
4.3.2.1.1.1.3.2	ILLUMINATE INTERNAL AREAS.	206
4.3.2.1.1.1.3.3	ACCOMMODATE ON RS A SOURCE OF LIGHT (NAVIGATION LIGHT) FOR SHUTTLE STAR TR	206
4.3.2.1.1.1.4	RESPOND TO LOSS OF FUNCTION.	207

TABLE OF CONTENTS – Continued

PARAGRAPH		PAGE
4.3.2.1.1.1.4.1	ISOLATE TO RECOVERY LEVEL.	207
4.3.2.1.1.1.4.2	RECOVER LOST FUNCTION.	207
4.3.2.1.1.1.4.3	ISOLATE FOR SAFING.	207
4.3.2.1.1.1.4.4	SAFE.	207
4.3.2.1.1.1.5	CONTROL STATION MODES.	207
4.3.2.1.1.1.5.1	MAINTAIN STATION MODE.	207
4.3.2.1.1.1.5.2	TRANSITION STATION MODES.	208
4.3.2.1.1.1.5.3	CAPABILITY: SUPPORT EXECUTE ATTITUDE CONTROL HANDOVER OPERATIONS.	209
4.3.2.1.1.1.6	SUPPORT CREW CONTROL INTERFACE.	209
4.3.2.1.1.1.6.1	PROVIDE DATA TO CREW.	209
4.3.2.1.1.1.6.2	ACCEPT CREW INPUTS AND COMMANDS.	210
4.3.2.1.1.1.6.3	CAPABILITY: PROVIDE CREW CONTROL INTERFACE.	210
4.3.2.1.1.1.7	MONITOR SYSTEM STATUS.	210
4.3.2.1.1.1.7.1	ACQUIRE FUNCTION STATUS DATA.	210
4.3.2.1.1.1.7.2	ASSESS FUNCTION STATUS DATA.	211
4.3.2.1.1.1.8	RESPOND TO EMERGENCY CONDITIONS.	211
4.3.2.1.1.1.8.1	RESPOND TO FIRE.	211
4.3.2.1.1.1.8.2	RESPOND TO RAPID DECOMPRESSION.	212
4.3.2.1.1.1.8.3	RESPOND TO HAZARDOUS ATMOSPHERE.	212
4.3.2.1.1.1.9	PROVIDE ELECTRICAL POWER.	213
4.3.2.1.1.1.9.1	GENERATE POWER.	213
4.3.2.1.1.1.9.2	DISTRIBUTE POWER.	213
4.3.2.1.1.1.9.3	STORE ENERGY.	213
4.3.2.1.1.1.10	MAINTAIN THERMAL CONDITIONING.	214
4.3.2.1.1.1.10.1	COLLECT THERMAL ENERGY (SEE 4.3.2.1.1.1.10).	214
4.3.2.1.1.1.10.2	TRANSMIT THERMAL ENERGY (SEE 4.3.2.1.1.1.10).	214
4.3.2.1.1.1.10.3	DISPOSE OF THERMAL ENERGY (SEE 4.3.2.1.1.1.10).	214
4.3.2.1.1.1.11	MAINTAIN TIME REFERENCE.	214
4.3.2.1.1.1.11.1	DISTRIBUTE TIME.	214
4.3.2.1.1.1.12	SUPPORT FLIGHT CREW.	214
4.3.2.1.1.1.12.1	ACCOMMODATE CREW HYGIENE AND WASTES.	215
4.3.2.1.1.1.12.2	SUPPORT RADIATION EXPOSURE MONITORING.	216

TABLE OF CONTENTS – Continued

PARAGRAPH		PAGE
4.3.2.1.1.1.12.3	ACCOMMODATE CREW PRIVACY.	216
4.3.2.1.1.1.12.4	SUPPORT CREW PERSONAL ITEMS	217
4.3.2.1.1.1.12.5	SUPPORT HOUSEKEEPING.	217
4.3.2.1.1.1.12.6	SUPPORT CREW HEALTH.	218
4.3.2.1.1.1.12.7	SUPPORT FOOD AND WATER CONSUMPTION AND CLEANUP.	218
4.3.2.1.1.1.12.8	SUPPORT FOOD PROCESSING.	218
4.3.2.1.1.1.12.9	PROVIDE FOOD.	219
4.3.2.1.1.1.12.10	SUPPORT INTERNAL CREW RESTRAINT AND MOBILITY.	219
4.3.2.1.1.1.13	CONTROL INTERNAL CARBON DIOXIDE AND CONTAMINANTS	221
4.3.2.1.1.1.13.1	CONTROL CARBON DIOXIDE.	221
4.3.2.1.1.1.13.2	CONTROL GASEOUS CONTAMINANTS.	221
4.3.2.1.1.1.13.3	CONTROL AIRBORNE PARTICULATE CONTAMINANTS.	222
4.3.2.1.1.1.13.4	CONTROL AIRBORNE MICROBIAL GROWTH.	222
4.3.2.1.1.1.14	PROVIDE WATER.	222
4.3.2.1.1.1.14.1	PROVIDE WATER FOR CREW USE.	222
4.3.2.1.1.1.15	PROVIDE VISUAL ACCESS.	223
4.3.2.1.1.1.15.1	PROVIDE DIRECT VISUAL ACCESS.	223
4.3.2.1.1.1.15.2	PROVIDE REMOTE INTERNAL VISUAL ACCESS.	223
4.3.2.1.1.1.15.3	RESERVED.	223
4.3.2.1.1.1.15.4	CAPABILITY: ACCOMMODATION OF PDGF VIDEO CABLE.	223
4.3.2.1.1.1.16	FACILITATE INTERNAL VOICE COMMUNICATION.	223
4.3.2.1.1.1.16.1	TRANSMIT VOICE COMMUNICATIONS.	223
4.3.2.1.1.1.16.2	RECEIVE VOICE COMMUNICATIONS.	224
4.3.2.1.1.1.17	RESERVED.	224
4.3.2.1.1.1.18	DETERMINE NAVIGATION PARAMETERS.	224
4.3.2.1.1.1.18.1	DETERMINE STATE VECTOR AND ATTITUDE.	224
4.3.2.1.1.1.18.2	GENERATE POINTING AND SUPPORT DATA.	225
4.3.2.1.1.1.19	MAINTAIN ATTITUDE – NONPROPULSIVE.	225
4.3.2.1.1.1.19.1	CAPABILITY: MAINTAIN ATTITUDE – NONPROPULSIVE.	225
4.3.2.1.1.1.20	SUPPORT ON–ORBIT TO GROUND COMMUNICATION.	228
4.3.2.1.1.1.20.1	SUPPORT UPLINKED DATA.	228
4.3.2.1.1.1.20.2	PROVIDE DATA FOR DOWNLINK.	229

TABLE OF CONTENTS – Continued

PARAGRAPH		PAGE
4.3.2.1.1.1.21	SUPPORT INTERNAL EQUIPMENT MANIPULATION AND MAINTENANCE.	229
4.3.2.1.1.1.21.1	SUPPORT INTERNAL EQUIPMENT TRANSLATION.	229
4.3.2.1.1.1.21.2	SUPPORT INTERNAL EQUIPMENT REMOVAL AND REPLACEMENT.	229
4.3.2.1.1.1.21.3	SUPPORT INTERNAL EQUIPMENT IDENTIFICATION.	230
4.3.2.1.1.1.21.4	SUPPORT INTERNAL EQUIPMENT RESTRAINT.	230
4.3.2.1.1.1.21.5	SUPPORT ORBITAL REPLACEABLE UNIT REPAIR.	230
4.3.2.1.1.1.21.6	STORE INTERNAL EQUIPMENT.	231
4.3.2.1.1.1.22	SUPPORT STATION TO EXTERNAL VEHICLE PROXIMITY OPERATIONS COMMUNICATIONS.	231
4.3.2.1.1.1.22.1	SUPPORT EXTERNAL INPUT DATA.	231
4.3.2.1.1.1.22.2	PROVIDE DATA FOR EXTERNAL VEHICLES.	231
4.3.2.1.1.1.22.3	SUPPORT EXTERNAL VEHICLE WAVE–OFF.	231
4.3.2.1.1.1.23	RESERVED.	231
4.3.2.1.1.1.24	CAPABILITIES DURING PRESSURE CHANGE.	231
4.3.2.1.1.2	MODE: REBOOST – HABITABLE.	232
4.3.2.1.1.2.1	EXECUTE TRANSLATION MANEUVERS.	232
4.3.2.1.1.2.1.1	EXECUTE MANEUVER GUIDANCE.	232
4.3.2.1.1.2.1.2	EXECUTE TRANSLATIONAL THRUST.	233
4.3.2.1.1.2.2	CONTROL ATTITUDE – PROPULSIVE.	237
4.3.2.1.1.2.2.1	ROTATIONAL CONTROL.	237
4.3.2.1.1.2.2.2	PROVIDE DESATURATION TORQUE.	245
4.3.2.1.1.3	RESERVED.	246
4.3.2.1.1.4	MODE – MICROGRAVITY.	246
4.3.2.1.1.4.1	SUPPORT MICROGRAVITY EXPERIMENTS.	246
4.3.2.1.1.4.1.1	LIMIT ACCELERATION.	246
4.3.2.1.1.4.1.2	LIMIT ANGULAR MOMENTUM DISTURBANCE.	247
4.3.2.1.1.5	MODE – SURVIVAL.	247
4.3.2.1.1.6	MODE – PROXIMITY OPERATIONS.	247
4.3.2.1.1.6.1	PROVIDE AUTOMATED COLLISION AVOIDANCE MANEUVERS.	247
4.3.2.1.1.6.2	RESERVED.	247
4.3.2.1.1.6.3	PROVIDE DOCKING STATUS.	247

TABLE OF CONTENTS – Continued

PARAGRAPH		PAGE
4.3.2.1.1.6.4	SUPPORT EXTERNAL VEHICLE TO ISS RELATIVE NAVIGATION.	248
4.3.2.1.1.6.5	EXTERNAL VEHICLE MONITORING DURING RENDEZVOUS APPROACH.	248
4.3.2.1.1.6.6	MISSION PLANNING – RENDEZVOUS AND DOCKING.	248
4.3.2.1.1.6.7	EXTERNAL VEHICLE VIDEO TRANSMISSION.	249
4.3.2.1.1.7	MODE – EXTERNAL OPERATIONS.	249
4.3.2.1.1.7.1	SUPPORT EVA OPERATIONS.	249
4.3.2.1.1.7.1.1	SUPPORT VOICE AND DATA COMMUNICATIONS.	249
4.3.2.1.1.7.1.2	COMMUNICATION WITH U.S. AIRLOCK ORLAN SUITS.	249
4.3.2.1.1.7.1.3	RESERVED.	249
4.3.2.1.1.7.1.4	SUPPORT STATION INGRESS.	249
4.3.2.1.1.7.1.5	ILLUMINATE EXTERNAL WORK SITES AND TRANSLATION PATHS.	250
4.3.2.1.1.7.1.6	TRACK EXTERNAL CREW.	250
4.3.2.1.1.7.1.7	CAPABILITY: SELF RESCUE OF EVA CREW.	250
4.3.2.1.1.7.2	ACCOMMODATE MOBILE SERVICING SYSTEM.	250
4.3.2.1.1.8	MODE – CREW DELIVERY AND RETURN.	250
4.3.2.1.1.8.1	SUPPORT CREW DELIVERY AND RETURN.	250
4.3.2.1.1.8.1.1	SCHEDULED CREW DELIVERY AND RETURN.	250
4.3.2.1.1.8.2	SUPPORT UNPLANNED CREW RETURN.	250
4.3.2.1.1.8.2.1	SUPPORT UNPLANNED CREW RETURN.	250
4.3.2.1.2	EXTERNAL AND PROXIMITY OPERATIONS.	251
4.3.2.1.2.1	MODE – PROXIMITY OPERATIONS.	251
4.3.2.1.2.2	MODE – EXTERNAL OPERATIONS.	251
4.3.2.1.3	STATE – SUPPORT MISSION.	251
4.3.2.1.3.1	RESERVED.	251
4.3.2.1.3.2	MODE – SPACE TRANSPORT.	251
4.3.2.1.3.2.1	SUPPORT RESUPPLY AND RETURN.	251
4.3.2.1.3.2.1.1	TRANSPORT CARGO.	251
4.3.2.2	PHYSICAL CHARACTERISTICS.	251
4.3.2.2.1	APPROACH AND DEPARTURE CORRIDOR.	251
4.3.2.2.2	ESTABLISH TRANSLATION PATHS.	251
4.3.2.2.3	ESTABLISH WORKSITES.	252

TABLE OF CONTENTS – Continued

PARAGRAPH		PAGE
4.3.2.2.3.1	COMMON RESTRAINT HARDWARE.	252
4.3.2.2.4	PROVIDE EXTERNAL AND INTERNAL STOWAGE OF TOOLS AND HARDWARE.	252
4.3.2.2.5	ISS STORAGE REQUIREMENTS.	253
4.3.2.2.6	TRANSFER EXTERNAL CREW AND HARDWARE.	253
4.3.2.2.7	DISTRIBUTE COMMANDS AND DATA.	253
4.3.2.2.7.1	PROVIDE OUTPUT AMPLITUDE.	253
4.3.2.2.8	SPP.	258
4.3.2.2.9	ATV.	258
4.3.2.3	RELIABILITY.	258
4.3.2.3.1	FAILURE TOLERANCE.	258
4.3.2.3.2	SERVICE LIFE.	258
4.3.2.3.3	FAILURE PROPAGATION.	258
4.3.2.3.4	REDUNDANCY STATUS.	258
4.3.2.4	MAINTAINABILITY.	259
4.3.2.4.1	QUALITATIVE MAINTAINABILITY REQUIREMENTS.	259
4.3.2.4.1.1	RESERVED.	259
4.3.2.4.1.2	PROCEDURES AND TOOLS.	259
4.3.2.4.2	QUANTITATIVE MAINTAINABILITY REQUIREMENTS.	259
4.3.2.4.2.1	EQUIPMENT MAINTENANCE TIME IN NON PRESSURIZED AREAS.	259
4.3.2.4.2.2	TOTAL MEAN MAINTENANCE CREW HOURS/YEAR.	259
4.3.2.4.2.2.1	EVA TOTAL MEAN MAINTENANCE CREW HOURS/YEAR.	259
4.3.2.4.2.2.2	IVA TOTAL MEAN MAINTENANCE CREW HOURS/YEAR.	259
4.3.2.4.2.3	AIRLOCK CYCLES TO SUPPORT EVA.	260
4.3.2.4.3	FAILURE DETECTION, ISOLATION AND RECOVERY (FDIR).	260
4.3.2.4.3.1	MANUAL CONTROL OF FDIR.	260
4.3.2.4.3.2	TESTING AT OPERATING LOCATION.	260
4.3.2.4.3.3	MANUAL FDIR.	260
4.3.2.4.3.4	AUTOMATIC FUNCTIONAL RECOVERY CONFIRMATION.	260
4.3.2.4.3.5	AUTOMATIC SAFING CONFIRMATION.	260
4.3.2.4.3.6	FALSE ALARM MITIGATION.	261
4.3.2.4.4	PRESSURE INTEGRITY.	261

TABLE OF CONTENTS – Continued

PARAGRAPH		PAGE
4.3.2.5	DOCKING MECHANISM AND CONTACT CONDITIONS.	261
4.3.2.6	ENVIRONMENTAL CONDITIONS.	261
4.3.2.6.1	ON–ORBIT ENVIRONMENTAL CONDITIONS.	261
4.3.2.6.1.1	THERMAL ENVIRONMENT.	261
4.3.2.6.1.2	NEUTRAL ATMOSPHERE.	262
4.3.2.6.1.3	EXTERNAL CONTAMINATION.	262
4.3.2.6.1.4	ELECTROMAGNETIC AND GEOMAGNETIC FIELDS.	262
4.3.2.6.1.5	PLASMA.	262
4.3.2.6.1.6	IONIZING RADIATION.	262
4.3.2.6.1.7	RESERVED.	263
4.3.2.6.1.8	METEOROIDS AND ORBITAL DEBRIS (M/OD).	263
4.3.2.6.1.9	RESERVED.	263
4.3.2.6.1.10	PLUME IMPINGEMENT PRESSURES.	263
4.3.2.6.1.11	FLIGHT ATTITUDE TABLE.	263
4.3.2.6.1.12	RESERVED.	263
4.3.3	DESIGN AND CONSTRUCTION.	263
4.3.3.1	MATERIALS, PROCESSES AND PARTS.	263
4.3.3.1.1	RESERVED.	263
4.3.3.1.2	RESERVED.	263
4.3.3.1.3	MATERIALS AND PROCESSES.	263
4.3.3.1.4	ELECTRICAL, ELECTRONIC, AND ELECTROMECHANICAL (EEE) PARTS.	263
4.3.3.1.5	SEAL LIFE.	264
4.3.3.1.6	FLUID AND CONNECTOR STANDARDS.	264
4.3.3.1.7	CAPABILITY: PROVIDE PROPELLANTS AND PRESSURANT GASES.	264
4.3.3.2	ELECTROMAGNETIC RADIATION.	264
4.3.3.2.1	ELECTROMAGNETIC COMPATIBILITY (EMC).	264
4.3.3.3	NAMEPLATES AND PRODUCT MARKING.	264
4.3.3.3.1	LABELING.	265
4.3.3.3.1.1	VENDOR LABELS.	265
4.3.3.3.2	ON–ORBIT LABELS.	265
4.3.3.4	WORKMANSHIP.	265

TABLE OF CONTENTS – Continued

PARAGRAPH		PAGE
4.3.3.4.1	CLEANLINESS.	265
4.3.3.4.2	CLEANLINESS OF SURFACES IN CONTACT WITH FLUIDS.	265
4.3.3.5	RESERVED.	266
4.3.3.6	SAFETY.	266
4.3.3.6.1	GENERAL.	266
4.3.3.6.1.1	CATASTROPHIC HAZARDS.	266
4.3.3.6.1.2	CRITICAL HAZARDS.	266
4.3.3.6.1.3	DESIGN FOR MINIMUM RISK.	266
4.3.3.6.1.4	CONTROL OF FUNCTIONS RESULTING IN CRITICAL HAZARDS.	266
4.3.3.6.1.4.1	INADVERTENT OPERATION RESULTING IN CRITICAL HAZARD.	266
4.3.3.6.1.4.2	LOSS OF FUNCTION RESULTING IN CRITICAL HAZARD.	266
4.3.3.6.1.5	CONTROL OF FUNCTIONS RESULTING IN CATASTROPHIC HAZARDS.	267
4.3.3.6.1.5.1	INADVERTENT OPERATION RESULTING IN CATASTROPHIC HAZARD.	267
4.3.3.6.1.5.2	LOSS OF FUNCTION RESULTING IN CATASTROPHIC HAZARD.	267
4.3.3.6.1.6	SUBSEQUENT INDUCED LOADS.	267
4.3.3.6.1.7	SAFETY INTERLOCKS.	267
4.3.3.6.1.8	ENVIRONMENTAL COMPATIBILITY.	268
4.3.3.6.1.9	REDUNDANT FUNCTIONS.	268
4.3.3.6.2	HAZARD DETECTION AND SAFING.	268
4.3.3.6.2.1	SAFING PRIOR TO RETURN/RESUPPLY/REFURBISHMENT.	268
4.3.3.6.2.2	MONITORS.	268
4.3.3.6.2.2.1	STATUS INFORMATION.	268
4.3.3.6.2.2.2	HAZARDOUS FUNCTION OPERATION PREVENTION.	268
4.3.3.6.2.2.3	LOSS OF INPUT OR FAILURE.	269
4.3.3.6.2.2.4	LAUNCH SITE AVAILABILITY.	269
4.3.3.6.2.2.5	FLIGHT CREW AVAILABILITY.	269
4.3.3.6.2.3	NEAR REAL–TIME MONITORING.	269
4.3.3.6.2.4	REAL–TIME MONITORING.	269
4.3.3.6.2.4.1	MAINTAIN STATUS OF HAZARD CONTROLS.	269
4.3.3.6.2.4.2	CREW RESPONSE TIME AND SAFING PROCEDURES.	270

TABLE OF CONTENTS – Continued

PARAGRAPH		PAGE
4.3.3.6.2.4.3	GROUND MONITORING.	270
4.3.3.6.3	COMMAND AND COMPUTER CONTROL OF HAZARDOUS FUNCTIONS.	270
4.3.3.6.3.1	COMPUTER CONTROL OF HAZARDOUS FUNCTIONS.	270
4.3.3.6.3.1.1	DETECTION AND RECOVERY.	270
4.3.3.6.3.1.2	INDEPENDENT SAFING ACTION.	271
4.3.3.6.4	HAZARDOUS MATERIALS.	271
4.3.3.6.4.1	HAZARDOUS FLUID CONTAINMENT FAILURE TOLERANCE.	271
4.3.3.6.5	PYROTECHNICS FOR RS APPLICATION.	271
4.3.3.6.6	RADIATION.	271
4.3.3.6.6.1	RESERVED.	271
4.3.3.6.6.2	NONIONIZING RADIATION.	271
4.3.3.6.6.3	SPACESUIT ELECTRIC FIELD RADIATION.	272
4.3.3.6.6.4	SPACESUIT MAGNETIC FIELD RADIATION.	272
4.3.3.6.7	OPTICS AND LASERS.	272
4.3.3.6.7.1	LASERS.	272
4.3.3.6.7.2	OPTICAL REQUIREMENTS.	272
4.3.3.6.7.2.1	OPTICAL INSTRUMENTS.	272
4.3.3.6.7.2.2	PERSONNEL PROTECTION.	272
4.3.3.6.7.2.3	DIRECT VIEWING OPTICAL SYSTEMS.	272
4.3.3.6.8	ELECTRICAL SAFETY.	272
4.3.3.6.8.1	ELECTRICAL POWER CIRCUIT OVERLOADS.	272
4.3.3.6.8.1.1	CIRCUIT OVERLOAD PROTECTION.	272
4.3.3.6.8.1.2	PROTECTIVE DEVICE SIZING.	273
4.3.3.6.8.1.3	BENT PIN OR CONDUCTIVE CONTAMINATION.	273
4.3.3.6.8.2	CREW PROTECTION FOR ELECTRICAL SHOCK.	273
4.3.3.6.8.2.1	EVA CREW PROTECTION FOR ELECTRIC SHOCK.	273
4.3.3.6.8.3	REAPPLICATION OF POWER.	273
4.3.3.6.8.4	BATTERIES.	273
4.3.3.6.9	LIQUID PROPELLANT PROPULSION SYSTEM.	273
4.3.3.6.9.1	INADVERTENT ENGINE FIRINGS.	273
4.3.3.6.9.1.1	PROPELLANT FLOW CONTROL DEVICES.	274
4.3.3.6.9.1.1.1	THRUSTER VALVES.	274

TABLE OF CONTENTS – Continued

PARAGRAPH		PAGE
4.3.3.6.9.1.1.2	OPERATIONS.	274
4.3.3.6.9.1.2	ELECTRICAL INHIBITS.	274
4.3.3.6.9.1.3	MONITORING OF ELECTRICAL INHIBITS TO PREVENT CATASTROPHIC THRUSTER FIRINGS.	274
4.3.3.6.9.2	PROPELLANT OVERHEATING.	275
4.3.3.6.9.3	PROPELLANT LEAKAGE.	275
4.3.3.6.9.4	RESERVED.	275
4.3.3.6.9.5	PLUME IMPINGEMENT.	275
4.3.3.6.9.6	HAZARDOUS VENTING.	275
4.3.3.6.9.7	MONITORING PROPULSION SYSTEM STATUS.	275
4.3.3.6.9.8	THE RS MOTION CONTROL SYSTEM.	275
4.3.3.6.10	FIRE PROTECTION.	276
4.3.3.6.10.1	MANUAL ACTIVATION.	276
4.3.3.6.10.2	ISOLATION.	276
4.3.3.6.10.3	SUPPRESSION.	276
4.3.3.6.10.4	SUPPRESSANT.	276
4.3.3.6.10.4.1	SUPPRESSANT MATERIAL.	276
4.3.3.6.10.4.2	TOXICITY LEVEL.	276
4.3.3.6.10.5	CONTAMINATION.	276
4.3.3.6.10.6	PORTABLE EQUIPMENT.	277
4.3.3.6.10.6.1	PROXIMITY TO ENTRANCE.	277
4.3.3.6.10.6.2	LOCATION WITHIN ELEMENT.	277
4.3.3.6.10.6.3	SET CO–LOCATION.	277
4.3.3.6.11	CONSTRAINTS.	277
4.3.3.6.11.1	PRESSURIZED VOLUME DEPRESSURIZATION AND REPRESSURIZATION TOLERANCE.	277
4.3.3.6.11.1.1	HAZARDS DURING DEPRESSURIZATION.	277
4.3.3.6.11.2	EMERGENCY EGRESS.	277
4.3.3.6.11.3	TRANSLATION ENTRY/EXIT PATHS.	277
4.3.3.6.11.4	COMPONENT HAZARDOUS ENERGY PROVISION.	278
4.3.3.6.11.5	HATCH OPENING.	278
4.3.3.6.11.6	HATCH OPERATIONS.	278
4.3.3.6.11.7	PINS OR DETACHABLE PARTS.	278

TABLE OF CONTENTS – Continued

PARAGRAPH		PAGE
4.3.3.6.11.8	SINGLE CREWMEMBER ENTRY/EXIT.	278
4.3.3.6.11.9	RESERVED.	278
4.3.3.6.11.10	EQUIPMENT CLEARANCE FOR ENTRAPMENT HAZARD.	278
4.3.3.6.11.11	LIGHT FIXTURE.	278
4.3.3.6.12	HUMAN FACTORS.	279
4.3.3.6.12.1	INTERNAL VOLUME TOUCH TEMPERATURE.	279
4.3.3.6.12.1.1	CONTINUOUS CONTACT – HIGH TEMPERATURES.	279
4.3.3.6.12.1.2	INCIDENTAL OR MOMENTARY CONTACT – HIGH TEMPERATURE.	279
4.3.3.6.12.1.3	INTERNAL VOLUME LOW TOUCH TEMPERATURE.	279
4.3.3.6.12.2	EXTERNAL TOUCH TEMPERATURE.	280
4.3.3.6.12.3	EXTERNAL EDGE, CORNER, AND PROTRUSION RADII.	280
4.3.3.6.12.4	IVA INTERNAL CORNER AND EDGE PROTECTION.	280
4.3.3.6.12.5	RESERVED.	280
4.3.3.6.12.6	LATCHES.	280
4.3.3.6.12.6.1	DESIGN.	280
4.3.3.6.12.6.2	PROTECTIVE COVERS OR GUARDS.	281
4.3.3.6.12.7	SCREWS AND BOLTS.	281
4.3.3.6.12.8	SAFETY CRITICAL FASTENERS.	281
4.3.3.6.12.9	LEVERS, CRANKS, HOOKS, AND CONTROLS.	281
4.3.3.6.12.10	BURRS.	281
4.3.3.6.12.11	RESERVED.	282
4.3.3.6.12.12	PROTRUSIONS.	282
4.3.3.6.12.13	PINCH POINTS.	282
4.3.3.6.12.14	EMERGENCY INGRESS FOR A NON–IMPAIRED CREW MEMBER.	282
4.3.3.6.12.15	FLEX HOSES, LINES, AND CABLES.	282
4.3.3.6.12.16	TRANSLATION ROUTES AND ESTABLISHED WORKSITES.	282
4.3.3.6.12.16.1	PRIMARY TRANSLATION ROUTES AND ESTABLISHED WORKSITES.	282
4.3.3.6.12.16.2	SECONDARY TRANSLATION ROUTES AND ESTABLISHED WORKSITES.	283
4.3.3.6.12.16.3	EVA CREWMEMBER CONTACT ISOLATION.	283
4.3.3.6.12.17	MOVING OR ROTATING EQUIPMENT.	283

TABLE OF CONTENTS – Continued

PARAGRAPH		PAGE
4.3.3.6.13	LAUNCH VEHICLE TRANSPORT – SPACE SHUTTLE LAUNCH.	283
4.3.3.6.13.1	SPACE SHUTTLE SERVICES.	283
4.3.3.6.13.1.1	FAULT TOLERANCE/SAFETY MARGINS.	283
4.3.3.6.13.1.2	TERMINATION OF SERVICES DUE TO ORBITER EMERGENCY CONDITIONS.	284
4.3.3.6.13.2	CRITICAL ORBITER SERVICES.	284
4.3.3.6.13.3	INADVERTENT DEPLOYMENT, SEPARATION, AND JETTISON FUNCTIONS.	284
4.3.3.6.13.4	PLANNED DEPLOYMENT/EXTENSION FUNCTIONS.	284
4.3.3.6.13.4.1	VIOLATION OF ORBITER PAYLOAD DOOR ENVELOPE.	284
4.3.3.6.13.4.2	METHOD OF FAULT TOLERANCE.	284
4.3.3.6.13.5	CONTINGENCY RETURN AND RAPID SAFING.	285
4.3.3.6.13.6	FLAMMABLE ATMOSPHERE.	285
4.3.3.6.13.6.1	RESERVED.	285
4.3.3.6.13.6.2	ELECTRICAL IGNITION SOURCES.	285
4.3.3.6.13.6.3	SURFACE TEMPERATURES.	285
4.3.3.6.13.6.4	CONDUCTIVE SURFACES.	285
4.3.3.6.13.7	ALLOWABLE RF RADIATION LEVELS.	285
4.3.3.6.13.8	LIGHTNING PROTECTION.	286
4.3.3.6.13.9	ORBITER VENT/DUMP PROVISIONS.	286
4.3.3.6.13.9.1	RELEASE OR EJECTION OF HAZARDOUS MATERIALS.	286
4.3.3.6.13.9.2	FLUID SYSTEM CONTAINMENT.	286
4.3.3.6.13.10	SEALED COMPARTMENTS.	286
4.3.3.6.14	GROUND INTERFACES AND SERVICES – SPACE SHUTTLE LAUNCH.	286
4.3.3.6.14.1	MOVING PARTS.	287
4.3.3.6.14.2	EQUIPMENT REQUIRING ADJUSTMENT.	287
4.3.3.6.14.3	IGNITION OF ADJACENT MATERIALS.	287
4.3.3.6.14.4	ACCIDENTAL CONTACT WITH ELECTRICAL EQUIPMENT.	287
4.3.3.6.15	GROUND INTERFACES AND SERVICES – RUSSIAN LAUNCH VEHICLE.	287
4.3.3.6.16	GROUND SUPPORT EQUIPMENT SAFETY REQUIREMENTS FOR SS LAUNCH OF RS HARDWARE.	288
4.3.3.7	HUMAN ENGINEERING.	288

TABLE OF CONTENTS – Continued

PARAGRAPH		PAGE
4.3.3.7.1	ANTHROPOMETRIC REQUIREMENTS.	288
4.3.3.7.2	EXTERNAL TASK LOCATION REQUIREMENTS.	288
4.3.3.7.3	STRENGTH REQUIREMENTS.	289
4.3.3.7.3.1	NORMAL OPERATIONS.	289
4.3.3.7.3.2	MAINTENANCE.	289
4.3.3.7.3.3	EMERGENCY CONTROLS.	289
4.3.3.7.4	GLOVED OPERATION.	290
4.3.3.7.5	LOCATION CODING.	290
4.3.3.7.5.1	ALPHANUMERIC CODING.	290
4.3.3.7.5.2	ACCOMMODATE CHANGES.	290
4.3.3.7.5.3	RESERVED.	290
4.3.3.7.5.4	EVA PRIMARY TRANSLATION PATH.	290
4.3.3.7.6	HOUSEKEEPING.	290
4.3.3.8	RESERVED.	291
4.3.3.9	SYSTEM SECURITY.	291
4.3.3.10	ENVIRONMENTAL CONSTRAINTS.	291
4.3.3.10.1	ACOUSTIC EMISSION LIMITS.	291
4.3.3.10.2	EXTERNAL CONTAMINATION RELEASES.	291
4.3.3.11	DESIGN FOR REMOTE CONTROLLED EXTERNAL OPERATIONS.	291
4.3.3.11.1	SHUTTLE REMOTE MANIPULATOR SYSTEM (SRMS) ROBOTIC SUPPORT OF THE SSP.	291
4.3.3.11.2	SRMS TO SSRMS ROBOTIC HAND–OFF.	292
4.3.3.11.3	SPACE STATION ROBOTIC MANIPULATOR SUPPORT (SSRMS) OF THE SPP.	292
4.3.3.11.3.1	SPP SUPPORT OF THE POWER DATA GRAPPLE FIXTURE (PDGF).	293
4.3.3.12	DESIGN REQUIREMENTS.	293
4.3.3.12.1	STRUCTURAL DESIGN REQUIREMENTS.	293
4.3.3.12.1.1	STRUCTURAL DESIGN LIFE FOR METEOROID AND ORBITAL DEBRIS ANALYSES.	293
4.3.3.12.1.1.1	PROBABILITY OF NO PENETRATION.	293
4.3.3.12.1.1.1.1	STRUCTURE PENETRATION.	293
4.3.3.12.1.2	EXTRAVEHICULAR ACTIVITY (EVA) ON–ORBIT INDUCED LOADS.	294

TABLE OF CONTENTS – Continued

PARAGRAPH		PAGE
4.3.3.12.1.3	ADDITIONAL M/OD SPACE PROTECTIONS.	294
4.3.3.12.2	WINDOW, GLASS AND CERAMIC STRUCTURAL DESIGN.	294
4.3.3.12.3	FRACTURE CONTROL.	294
4.3.3.12.4	STRUCTURAL DESIGN CONSTRAINTS.	294
4.3.3.12.4.1	FGB STRUCTURAL DESIGN CONSTRAINT.	294
4.3.3.12.4.2	SM STRUCTURAL DESIGN CONSTRAINT.	295
4.3.3.12.5	FLUID HANDLING REQUIREMENTS.	295
4.3.3.12.5.1	FLUID QUANTITY DETERMINATION.	295
4.3.3.12.5.2	INTERFACE HARDWARE.	295
4.3.3.12.5.3	FLEXIBLE LINES AND BELLOWS DESIGN.	295
4.3.3.12.6	KNOBS AND FASTENERS.	295
4.3.3.12.7	ATMOSPHERE LEAKAGE.	295
4.3.3.12.8	OPERATIONAL ALTITUDE.	296
4.3.3.12.9	PRECLUDE CONDENSATION.	296
4.3.3.12.10	VENTING/DUMPING.	296
4.3.3.13	EVA EQUIPMENT HANDLING CAPABILITIES.	296
4.3.3.14	MIL–STD–1553 DATA BUS ADDRESSES.	296
4.3.3.15	MIL–STD–1553 DATA BUS CONSTRAINTS.	297
4.3.3.15.1	SSQ COMPONENTS.	297
4.3.3.15.1.1	BUS COUPLER TYPE.	297
4.3.3.15.2	BUS STUB LENGTH.	297
4.3.3.15.3	BUS COUPLING.	298
4.3.3.16	TERMINAL INTERFACE UNITS.	298
4.3.3.16.1	TIU MULTIPLE BUS ISOLATION.	298
4.3.3.17	RS NOT–TO–EXCEED BUS LENGTH.	298
4.3.4	COMPUTER RESOURCE REQUIREMENTS.	298
4.3.4.1	COMPUTER HARDWARE DESIGN CONSIDERATIONS.	298
4.3.4.2	FLEXIBILITY AND EXPANSION.	298
4.3.5	LOGISTICS.	299
4.3.5.1	MAINTENANCE.	299
4.3.5.1.1	GENERAL MAINTENANCE REQUIREMENTS.	299
4.3.5.1.1.1	RS LOGISTICS INFRASTRUCTURE.	299
4.3.5.1.1.2	ORU MAINTENANCE LEVEL DISTRIBUTION.	299

TABLE OF CONTENTS – Continued

PARAGRAPH		PAGE
4.3.5.1.2	PERFORM ON–ORBIT MAINTENANCE.	300
4.3.5.1.2.1	ORU REMOVAL AND REPLACEMENT.	300
4.3.5.1.2.2	IN SITU MAINTENANCE.	300
4.3.5.1.2.3	MAINTENANCE COORDINATION.	300
4.3.5.1.2.4	ORU PACKAGING.	300
4.3.5.1.2.5	PROCEDURE STORAGE.	301
4.3.5.1.2.6	LIQUID OR GAS VENTING.	301
4.3.5.2	SUPPLY.	301
4.3.5.2.1	GENERAL SUPPLY REQUIREMENTS.	301
4.3.5.2.1.1	SUSTAINING FLEET RESOURCES.	301
4.3.5.2.1.2	MISSED RESUPPLY CREW PROVISIONS.	301
4.3.5.2.1.3	MAINTENANCE RESOURCES.	301
4.3.5.2.1.4	ON–ORBIT PROPELLANT RESERVE.	302
4.3.5.2.2	PROVIDE INVENTORY MANAGEMENT CAPABILITY.	302
4.3.5.2.2.1	CRITICAL ITEM STORAGE.	302
4.3.6	RESERVED.	302
4.3.7	CHARACTERISTICS OF MAJOR FUNCTIONAL ELEMENTS.	302
4.3.7.1	FUNCTIONAL CARGO BLOCK.	302
4.3.7.1.1	PURPOSE.	302
4.3.7.1.2	DESCRIPTION.	302
4.3.7.1.3	CAPABILITIES.	302
4.3.7.1.3.1	CONTROL TOTAL PRESSURE.	302
4.3.7.1.3.1.1	MONITOR TOTAL PRESSURE.	302
4.3.7.1.3.2	CONTROL OXYGEN PARTIAL PRESSURE.	303
4.3.7.1.3.2.1	MONITOR OXYGEN PARTIAL PRESSURE.	303
4.3.7.1.3.3	FGB TO PMA1 LEAK SEAL MONITORING AND REPRESSURIZATION.	303
4.3.7.1.3.4	EQUALIZE PRESSURE.	303
4.3.7.1.3.4.1	CONTROL ATMOSPHERE TEMPERATURE.	303
4.3.7.1.3.4.1.1	MONITOR ATMOSPHERE TEMPERATURE.	303
4.3.7.1.3.4.1.2	REMOVE ATMOSPHERE HEAT.	304
4.3.7.1.3.4.2	CONTROL ATMOSPHERE MOISTURE.	304
4.3.7.1.3.4.2.1	MONITOR HUMIDITY.	304

TABLE OF CONTENTS – Continued

PARAGRAPH		PAGE
4.3.7.1.3.5	CIRCULATE ATMOSPHERE.	304
4.3.7.1.3.5.1	CIRCULATE ATMOSPHERE INTRA–MODULE.	304
4.3.7.1.3.5.2	CIRCULATE ATMOSPHERE INTER–MODULE.	304
4.3.7.1.3.6	ISOLATE TO RECOVERY LEVEL.	305
4.3.7.1.3.7	RECOVER LOST FUNCTION.	305
4.3.7.1.3.8	SAFE.	305
4.3.7.1.3.9	RESERVED.	305
4.3.7.1.3.10	RESERVED.	305
4.3.7.1.3.11	DISTRIBUTE TIME.	305
4.3.7.1.3.12	PROVIDE DATA TO CREW.	305
4.3.7.1.3.13	ACQUIRE FUNCTION STATUS DATA.	306
4.3.7.1.3.13.1	COLLECT FUNCTION STATUS DATA.	306
4.3.7.1.3.14	ASSESS FUNCTION STATUS DATA.	306
4.3.7.1.3.15	PROVIDE CREW CONTROL INTERFACE.	306
4.3.7.1.3.16	RESERVED.	306
4.3.7.1.3.17	RESPOND TO FIRE.	306
4.3.7.1.3.17.1	DETECT FIRE EVENT.	306
4.3.7.1.3.17.2	ISOLATE FIRE CONTROL ZONE.	307
4.3.7.1.3.17.3	EXTINGUISH FIRE.	307
4.3.7.1.3.17.4	RECOVER FROM FIRE.	307
4.3.7.1.3.18	RESERVED.	307
4.3.7.1.3.19	RESPOND TO HAZARDOUS ATMOSPHERE.	307
4.3.7.1.3.20	PROVIDE ELECTRICAL POWER.	307
4.3.7.1.3.20.1	GENERATE POWER.	307
4.3.7.1.3.20.2	DISTRIBUTE POWER.	308
4.3.7.1.3.20.3	STORE ENERGY.	308
4.3.7.1.3.21	RESERVED.	308
4.3.7.1.3.22	MAINTAIN THERMAL CONDITIONING.	308
4.3.7.1.3.22.1	COLLECT THERMAL ENERGY (SEE 4.3.7.1.3.22).	309
4.3.7.1.3.22.2	TRANSMIT THERMAL ENERGY (SEE 4.3.7.1.3.22).	309
4.3.7.1.3.22.3	DISPOSE OF THERMAL ENERGY (SEE 4.3.7.1.3.22).	309
4.3.7.1.3.22.4	PASSIVE THERMAL ENERGY.	309
4.3.7.1.3.23	RESERVED.	309

TABLE OF CONTENTS – Continued

PARAGRAPH		PAGE
4.3.7.1.3.24	SUPPORT INTERNAL CREW RESTRAINT AND MOBILITY.	309
4.3.7.1.3.25	CONTROL CARBON DIOXIDE.	311
4.3.7.1.3.25.1	MONITOR CARBON DIOXIDE.	311
4.3.7.1.3.26	CONTROL AIRBORNE PARTICULATE CONTAMINANT.	311
4.3.7.1.3.26.1	REMOVE AIRBORNE PARTICULATE CONTAMINANTS.	311
4.3.7.1.3.27	PROVIDE REMOTE INTERNAL VISUAL ACCESS.	311
4.3.7.1.3.27.1	TRANSMIT VIDEO SIGNAL.	311
4.3.7.1.3.27.2	RECEIVE VIDEO SIGNAL.	312
4.3.7.1.3.27.3	FGB VIDEO TRANSMISSION.	312
4.3.7.1.3.28	TRANSMIT VOICE COMMUNICATIONS.	312
4.3.7.1.3.28.1	TRANSMIT HARDWIRE.	312
4.3.7.1.3.29	RECEIVE VOICE COMMUNICATIONS.	312
4.3.7.1.3.29.1	RECEIVE HARDWIRE.	312
4.3.7.1.3.30	SUPPORT UPLINKED DATA.	313
4.3.7.1.3.30.1	RECEIVE UPLINKED DATA.	313
4.3.7.1.3.30.2	PREPARE UPLINKED DATA FOR ON–BOARD DISTRIBUTION.	313
4.3.7.1.3.30.3	DISTRIBUTE UPLINKED DATA.	313
4.3.7.1.3.31	PROVIDE DATA FOR DOWN LINK.	313
4.3.7.1.3.31.1	PREPARE DATA FOR DOWNLINK.	313
4.3.7.1.3.31.2	TRANSMIT DATA FOR DOWN LINK.	313
4.3.7.1.3.32	SUPPORT INTERNAL EQUIPMENT TRANSLATION.	314
4.3.7.1.3.33	SUPPORT INTERNAL EQUIPMENT REMOVAL AND REPLACEMENT.	314
4.3.7.1.3.34	SUPPORT INTERNAL EQUIPMENT IDENTIFICATION.	314
4.3.7.1.3.35	SUPPORT INTERNAL EQUIPMENT RESTRAINT.	315
4.3.7.1.3.36	EXECUTE MANEUVER GUIDANCE.	315
4.3.7.1.3.37	EXECUTE TRANSLATION THRUST.	315
4.3.7.1.3.38	CONTROL ATTITUDE – PROPULSIVE.	317
4.3.7.1.3.38.1	CONTROL ATTITUDE PROPULSIVELY IN THE CONFIGURATION INDICATED IN TABLE XVIII	319
4.3.7.1.3.38.2	INDICATE STATUS OF MOTION CONTROL SYSTEM.	321
4.3.7.1.3.39	LIMIT ACCELERATIONS.	321
4.3.7.1.3.40	LIGHT FGB.	321

TABLE OF CONTENTS – Continued

PARAGRAPH		PAGE
4.3.7.1.3.40.1	CONTROL INTERNAL LIGHTING.	321
4.3.7.1.3.40.2	ILLUMINATE INTERNAL AREAS.	321
4.3.7.1.3.41	SUPPORT HOUSEKEEPING.	322
4.3.7.1.3.42	STORE INTERNAL EQUIPMENT.	322
4.3.7.1.3.43	SUPPORT ORBITAL REPLACEMENT UNIT REPAIR.	322
4.3.7.1.3.44	PROVIDE AUTOMATED COLLISION AVOIDANCE MANEUVERS.	323
4.3.7.1.3.45	PROVIDE DOCKING STATUS.	323
4.3.7.1.3.46	FGB RELATIVE NAVIGATION SUPPORT.	323
4.3.7.1.3.47	FGB VIDEO TRANSMISSION.	323
4.3.7.1.3.48	AUTOMATIC POWER REDUCTION.	324
4.3.7.1.3.49	COMMUNICATION WITH US AIRLOCK ORLAN SUITS.	324
4.3.7.2	SERVICE MODULE.	324
4.3.7.2.1	PURPOSE.	324
4.3.7.2.2	DESCRIPTION.	324
4.3.7.2.3	CAPABILITIES.	324
4.3.7.2.3.1	CONTROL TOTAL PRESSURE.	324
4.3.7.2.3.1.1	MONITOR TOTAL PRESSURE.	324
4.3.7.2.3.2	CONTROL OXYGEN PARTIAL PRESSURE.	324
4.3.7.2.3.2.1	MONITOR OXYGEN PARTIAL PRESSURE.	324
4.3.7.2.3.2.2	INTRODUCE OXYGEN.	325
4.3.7.2.3.3	RESERVED.	325
4.3.7.2.3.4	EQUALIZE PRESSURE.	325
4.3.7.2.3.5	CONTROL ATMOSPHERE TEMPERATURE.	325
4.3.7.2.3.5.1	MONITOR ATMOSPHERE TEMPERATURE.	325
4.3.7.2.3.5.2	REMOVE ATMOSPHERE HEAT.	325
4.3.7.2.3.6	CONTROL ATMOSPHERIC MOISTURE.	326
4.3.7.2.3.6.1	REMOVE EXCESS MOISTURE FROM THE CABIN ATMOSPHERE.	326
4.3.7.2.3.6.2	DISPOSE OF REMOVED MOISTURE.	326
4.3.7.2.3.6.3	MONITOR HUMIDITY.	326
4.3.7.2.3.7	CIRCULATE ATMOSPHERE.	326
4.3.7.2.3.7.1	CIRCULATE ATMOSPHERE INTRA–MODULE.	326
4.3.7.2.3.7.2	CIRCULATE ATMOSPHERE INTER–MODULE.	327
4.3.7.2.3.8	LIGHT STATION.	327

TABLE OF CONTENTS – Continued

PARAGRAPH		PAGE
4.3.7.2.3.8.1	CONTROL INTERNAL LIGHTING.	327
4.3.7.2.3.8.2	ACCOMMODATE ON SM A SOURCE OF LIGHT (NAVIGATION LIGHT) FOR SHUTTLE STAR TRA	327
4.3.7.2.3.8.3	ILLUMINATE INTERNAL AREA.	327
4.3.7.2.3.9	ISOLATE TO RECOVERY LEVEL.	328
4.3.7.2.3.10	RECOVER LOST FUNCTION.	328
4.3.7.2.3.11	SAFE.	328
4.3.7.2.3.12	MAINTAIN STATION MODE.	328
4.3.7.2.3.13	TRANSITION STATION MODES.	329
4.3.7.2.3.14	PROVIDE DATA TO CREW.	329
4.3.7.2.3.15	ACCEPT CREW INPUTS AND COMMANDS.	329
4.3.7.2.3.16	ACQUIRE FUNCTION STATUS DATA.	330
4.3.7.2.3.17	ASSESS FUNCTION STATUS DATA.	330
4.3.7.2.3.18	RESPOND TO FIRE.	330
4.3.7.2.3.18.1	DETECT FIRE EVENT.	330
4.3.7.2.3.18.2	ISOLATE FIRE CONTROL ZONE.	330
4.3.7.2.3.18.3	EXTINGUISH FIRE.	331
4.3.7.2.3.18.4	RECOVER FROM FIRE.	331
4.3.7.2.3.19	RESPOND TO DECOMPRESSION.	331
4.3.7.2.3.19.1	DETECT RAPID DECOMPRESSION.	331
4.3.7.2.3.19.2	ISOLATE RAPID DECOMPRESSION.	332
4.3.7.2.3.20	RESPOND TO HAZARDOUS ATMOSPHERE.	332
4.3.7.2.3.21	MAINTAIN THERMAL CONDITIONING.	332
4.3.7.2.3.21.1	COLLECT THERMAL ENERGY (SEE 4.3.7.2.3.21).	332
4.3.7.2.3.21.2	TRANSMIT THERMAL ENERGY (SEE 4.3.7.2.3.21).	332
4.3.7.2.3.21.3	DISPOSE OF THERMAL ENERGY (SEE 4.3.7.2.3.21).	332
4.3.7.2.3.22	PROVIDE CREW CONTROL INTERFACE.	332
4.3.7.2.3.23	DISTRIBUTE TIME.	333
4.3.7.2.3.24	ACCOMMODATE CREW HYGIENE AND WASTES.	333
4.3.7.2.3.25	SUPPORT RADIATION EXPOSURE MONITORING.	334
4.3.7.2.3.26	ACCOMMODATE CREW PRIVACY.	334
4.3.7.2.3.27	SUPPORT CREW PERSONAL ITEMS.	335
4.3.7.2.3.28	SUPPORT HOUSEKEEPING.	335

TABLE OF CONTENTS – Continued

PARAGRAPH		PAGE
4.3.7.2.3.29	SUPPORT CREW HEALTH.	336
4.3.7.2.3.29.1	MONITOR CREW HEALTH.	336
4.3.7.2.3.29.2	RESPOND TO CREW ILLNESS OR INJURY.	336
4.3.7.2.3.29.3	PROVIDE PREVENTIVE CREW HEALTH CARE.	336
4.3.7.2.3.29.4	SUPPORT MICROGRAVITY COUNTERMEASURES AND EXERCISE.	336
4.3.7.2.3.30	SUPPORT FOOD AND WATER CONSUMPTION AND CLEANUP.	336
4.3.7.2.3.31	SUPPORT FOOD PROCESSING.	337
4.3.7.2.3.32	PROVIDE FOOD.	337
4.3.7.2.3.33	SUPPORT INTERNAL CREW RESTRAINT AND MOBILITY.	337
4.3.7.2.3.34	CONTROL CARBON DIOXIDE.	339
4.3.7.2.3.34.1	REMOVE CARBON DIOXIDE.	339
4.3.7.2.3.34.2	DISPOSE OF CARBON DIOXIDE.	340
4.3.7.2.3.35	CONTROL GASEOUS CONTAMINANTS.	340
4.3.7.2.3.35.1	REMOVE GASEOUS CONTAMINANTS.	340
4.3.7.2.3.35.2	DISPOSE OF GASEOUS CONTAMINANTS.	340
4.3.7.2.3.36	CONTROL AIRBORNE PARTICULATE CONTAMINANTS.	340
4.3.7.2.3.36.1	REMOVE AIRBORNE PARTICULATE CONTAMINANTS.	340
4.3.7.2.3.37	CONTROL AIRBORNE MICROBIAL GROWTH.	341
4.3.7.2.3.37.1	REMOVE AIRBORNE MICROBES.	341
4.3.7.2.3.38	PROVIDE WATER FOR CREW USE.	341
4.3.7.2.3.38.1	SUPPLY WATER FOR POTABLE USE.	341
4.3.7.2.3.38.2	SUPPLY WATER FOR HYGIENE USE.	341
4.3.7.2.3.38.3	WASTE WATER MANAGEMENT.	342
4.3.7.2.3.38.4	MONITOR WATER QUALITY.	342
4.3.7.2.3.39	PROVIDE DIRECT VISUAL ACCESS.	342
4.3.7.2.3.40	PROVIDE REMOTE INTERNAL VISUAL ACCESS.	342
4.3.7.2.3.40.1	CREATE VIDEO SIGNAL.	342
4.3.7.2.3.41	TRANSMIT VOICE COMMANDS.	343
4.3.7.2.3.41.1	TRANSMIT HARDWIRE.	343
4.3.7.2.3.42	RECEIVE VOICE COMMUNICATIONS.	343
4.3.7.2.3.42.1	RECEIVE HARDWIRE.	343

TABLE OF CONTENTS – Continued

PARAGRAPH		PAGE
4.3.7.2.3.43	DETERMINE STATE VECTOR AND ATTITUDE.	343
4.3.7.2.3.43.1	PROVIDE STATE VECTOR AND ATTITUDE.	343
4.3.7.2.3.43.2	GENERATE POINTING AND SUPPORT DATA.	344
4.3.7.2.3.44	MAINTAIN ATTITUDE – NONPROPULSIVE.	344
4.3.7.2.3.45	SUPPORT UPLINKED DATA.	347
4.3.7.2.3.45.1	RECEIVE UPLINKED DATA.	347
4.3.7.2.3.45.2	PREPARE UPLINKED DATA FOR ON–BOARD DISTRIBUTION.	347
4.3.7.2.3.45.3	DISTRIBUTE UPLINKED DATA.	347
4.3.7.2.3.46	PROVIDE DATA FOR DOWN LINK.	348
4.3.7.2.3.46.1	PREPARE DATA FOR DOWN LINK.	348
4.3.7.2.3.46.2	TRANSMIT DATA FOR DOWN LINK.	348
4.3.7.2.3.47	SUPPORT INTERNAL EQUIPMENT TRANSLATION.	348
4.3.7.2.3.48	SUPPORT INTERNAL EQUIPMENT REMOVAL AND REPLACEMENT.	348
4.3.7.2.3.49	SUPPORT INTERNAL EQUIPMENT IDENTIFICATION.	349
4.3.7.2.3.50	SUPPORT INTERNAL EQUIPMENT RESTRAINT.	349
4.3.7.2.3.51	SUPPORT ORBITAL REPLACEABLE UNIT REPAIR.	349
4.3.7.2.3.52	STORE INTERNAL EQUIPMENT.	350
4.3.7.2.3.53	SUPPORT EXTERNAL VEHICLE INPUT DATA FOR PROXIMITY OPERATIONS.	350
4.3.7.2.3.53.1	RECEIVE EXTERNAL VEHICLE INPUT DATA.	350
4.3.7.2.3.53.2	PREPARE EXTERNAL INPUT DATA FOR ONBOARD DISTRIBUTION.	350
4.3.7.2.3.54	PROVIDE DATA FOR EXTERNAL VEHICLES FOR PROXIMITY OPERATIONS.	350
4.3.7.2.3.54.1	PREPARE DATA FOR EXTERNAL VEHICLES.	350
4.3.7.2.3.54.2	TRANSMIT DATA TO EXTERNAL VEHICLES.	350
4.3.7.2.3.55	SUPPORT EXTERNAL VEHICLE WAVE–OFF.	350
4.3.7.2.3.55.1	DETERMINE EXTERNAL VEHICLE WAVE–OFF.	351
4.3.7.2.3.55.2	COMMUNICATE WAVE–OFF TO EXTERNAL VEHICLE.	351
4.3.7.2.3.56	EXECUTE TRANSLATION MANEUVERS.	351
4.3.7.2.3.56.1	EXECUTE MANEUVER GUIDANCE.	351
4.3.7.2.3.56.2	EXECUTE TRANSLATION THRUST.	352
4.3.7.2.3.57	CONTROL ATTITUDE – PROPULSIVE.	355

TABLE OF CONTENTS – Continued

PARAGRAPH		PAGE
4.3.7.2.3.58	PROVIDE DESATURATION TORQUE.	360
4.3.7.2.3.59	PROVIDE DEPRESSURIZATION CAPABILITIES.	362
4.3.7.2.3.60	COMMUNICATIONS WITH US AIRLOCK ORLAN SUITS.	362
4.3.7.2.3.61	SUPPORT ATTITUDE CONTROL HANDOVER OPERATIONS.	362
4.3.7.3	RESERVED.	363
4.3.7.4	RESERVED.	363
4.3.7.5	RESERVED.	363
4.3.7.6	SOYUZ VEHICLE.	363
4.3.7.6.5.9.3.2	PROXIMITY OPERATIONS.	363
4.3.7.6.5.9.3.2.1	PROVIDE AUTOMATED COLLISION AVOIDANCE MANEUVERS.	363
4.3.7.6.5.9.3.2.2	MISSION PLANNING – RENDEZVOUS AND DOCKING.	363
4.3.7.6.5.9.3.3	SOYUZ VEHICLE DOCKING INDICATION.	364
4.3.7.6.5.9.4.9	SEPARATION CLEARANCE RANGE.	364
4.3.7.6.5.9.4.10	SEPARATION FROM A TUMBLING STATION.	364
4.3.7.6.5.9.5.1	CREW INTERVENTION.	364
4.3.7.7	CARGO VEHICLE VERIFICATION.	364
4.3.7.7.3.5	SAFE.	365
4.3.7.7.3.7	DETERMINE STATE VECTOR AND ATTITUDE.	365
4.3.7.7.3.10	EXECUTE MANEUVER GUIDANCE.	365
4.3.7.7.3.11	EXECUTE TRANSLATION THRUST.	365
4.3.7.7.3.12	CONTROL ATTITUDE – PROPULSIVE.	367
4.3.7.7.3.13	TRANSPORT CARGO.	367
4.3.7.7.3.15	PROPELLANT TRANSFER.	367
4.3.7.7.3.17	CAPABILITY, SUPPORT PRELAUNCH OPERATIONS.	368
4.3.7.7.3.17.1	LOAD/UNLOAD CARGO ITEMS.	368
4.3.7.7.3.18	CARGO VEHICLE DOCKING INDICATION.	368
4.3.7.7.3.21	SEPARATION CLEARANCE RANGE.	368
4.3.7.7.3.22	PROVIDE AUTOMATED COLLISION AVOIDANCE MANEUVERS.	368
4.3.7.7.3.23	MISSION PLANNING – RENDEZVOUS AND DOCKING.	369
4.3.7.8	RESERVED.	369
4.3.7.9	RESERVED.	369
4.3.7.10	RESERVED.	369
4.3.7.10.3.1.2	ACCOMMODATE MOBILE SERVICING SYSTEM.	369

TABLE OF CONTENTS – Continued

PARAGRAPH		PAGE
4.3.7.10.3.1.2.1	PDGF STAND LOAD/STIFFNESS LIMITS.	369
4.3.7.10.3.1.3	PDGF MOUNTING RING ASSEMBLY.	369
4.3.7.10.3.1.4	VIDEO SIGNAL CONVERTER (VSC) ACCOMMODATION.	369
4.3.7.10.3.2	PDGF VIDEO, POWER, DATA DISTRIBUTION.	369
4.3.7.10.3.2.1	PDGF VIDEO.	369
4.3.7.10.3.2.2	PDGF POWER.	369
4.3.7.10.3.2.3	MIL–STD–1553 DATA.	370
4.3.7.10.3.3	SSRMS ON FGB PDGF OPERATIONS.	370
5.0	PREPARATION FOR DELIVERY.	371
6.0	NOTES.	372
6.1	ABBREVIATIONS AND ACRONYMS.	372
6.2	DEFINITIONS.	374

APPENDIX		PAGE
A	MATRIX OF APPLICABILITY OF 3.2.2 TO 3.5 REQUIREMENTS TO RUSSIAN VEHICLES.	379

TABLE OF CONTENTS – Continued

TABLES

TABLE		PAGE
I.	RS MINIMUM INTERIOR LIGHTING INTENSITY LEVELS	15
II.	CAPABILITIES REQUIRING AUTOMATIC FDIR	15
III.	ON–ORBIT RS MODE/CAPABILITY APPLICABILITY	20
IV.	POWER INTERFACE CAPABILITIES	28
V.	SPACECRAFT MAXIMUM ALLOWABLE CONCENTRATIONS	34
VI.	CURRENT RUSSIAN CAPABILITIES	35
VI–1A.	JOINT ISS WATER QUALITY STANDARDS	36
VI–2A.	DISTRIBUTION OF CRITICAL FUNCTIONS	43
VI–A.	PROPULSION SYSTEM PERFORMANCE – SM – SPP PROGRESS M	47
VI–B.	PROPULSION SYSTEM PERFORMANCE – PROGRESS M1–FGB	48
VII.	RS ANNUAL CARGO REQUIREMENTS	68
VIII.	RS CAPABILITY FAILURE TOLERANCES	72
VIII–A.	RELATIVE DOCKING CONTACT CONDITIONS FOR RUSSIAN ACTIVE DOCKING VEHICLE WEIGHTS OF APPROXIMATELY 7–8 METRIC TONS (15,500 – 17,600 LBS.)	79
VIII–B.	RELATIVE DOCKING CONTACT CONDITIONS FOR RUSSIAN ACTIVE DOCKING VEHICLE WEIGHTS OF APPROXIMATELY 12 METRIC TONS (26,500 LBS.) AND FOR ASSEMBLY STAGES PRIOR TO FLIGHT 13A	79
VIII–C.	RELATIVE DOCKING CONTACT CONDITIONS FOR RUSSIAN ACTIVE DOCKING VEHICLE WEIGHTS OF APPROXIMATELY 12 METRIC TONS (26,500 LBS.) AND FOR ASSEMBLY STAGES AFTER FLIGHT 13A	80
VIII–D.	RELATIVE DOCKING CONTACT CONDITIONS FOR RUSSIAN ACTIVE DOCKING VEHICLE WEIGHT OF APPROXIMATELY 20 MT (44,100 LBS)	80
IX.	HOT AND COLD NATURAL THERMAL ENVIRONMENT	81
X.	EXTREME HOT AND COLD NATURAL THERMAL ENVIRONMENT	84
XI.	SOLAR AND GEOMAGNETIC PARAMETER APPLICABLE TO SPACE STATION DESIGN	84
XII.	PARAMETERS FOR M/OD ENVIRONMENTS DEFINITION	88
XII–A.	FLIGHT ATTITUDES	88
XIII.	DESIGNATED EXTRAVEHICULAR ACTIVITY INTERFACES	105
XIV.	EDGE, CORNER, AND PROTRUSION CRITERIA – EDGE AND IN–PLANE CORNER RADII	106

TABLE OF CONTENTS – Continued

TABLES

TABLE		PAGE
XV.	EXTERNAL HARDWARE PLACARDS AND CONTROLS	108
XV–A.	STRUCTURAL PENETRATION RESISTANCE CAPABILITY	119
XVI.	MAXIMUM LIMITS FOR TRANSPORT OF OBJECTS BY A SINGLE CREWMEMBER	123
XVI–A.	RS NOT–TO–EXCEED BUS LENGTHS	125
XVII.	FAILURE DETECTION, ISOLATION, AND RECOVERY FUNCTIONS	130
XIX.	FGB INTERIOR LIGHTING INTENSITY LEVELS	146
XIX–A.	SOYUZ ANTHROPOMETRIC LIMITS	177
XIX–B.	MEASUREMENT DEFINITION AND METHODS	178
XX.	TEST INTERFACE	254

TABLE OF CONTENTS – Continued

FIGURES

FIGURE		PAGE
1.	EXTERNAL RS INTERFACES	6
2.	RS INTERNAL INTERFACES	9
3.	FGB INTERFACES	10
4.	FIRE PROTECTION SELECTION CRITERIA	24
4–A.	SM ATTITUDE TURN, ATTITUDE HOLD, TRANSLATION, AND STABILIZATION WHEN NO VEHICLES ARE ON THE SM AFT END	49
4–B.	PROGRESS TRANSLATION AND STABILIZATION, SM ATTITUDE TURN AND ATTITUDE HOLD WITH PROGRESS AT AFT END OF SM – NO MATCHING UNIT BETWEEN SM AND PROGRESS	50
4–C.	PROGRESS TRANSLATION AND SM ATTITUDE TURN, ATTITUDE HOLD, AND STABILIZATION WITH PROGRESS AT SM AFT END OR FGB NADIR (ONLY FOR CERTAIN CONFIGURATIONS) – NO MATCHING UNIT BETWEEN SM AND PROGRESS	51
4–D.	SM ATTITUDE TURN, ATTITUDE HOLD, AND STABILIZATION AND COMMANDING OF PROGRESS THRUSTERS, WITH PROGRESS ON SM AFT END AND MATCHING UNIT BETWEEN SM AND PROGRESS	52
5.	ALLOWABLE ACCELERATIONS @ THE TBD INTERFACE	60
5–A.	ALLOWABLE ACCELERATIONS @ THE STRUCTURAL MOUNTING INTERFACE TO THE INTERNAL PAYLOAD LOCATIONS (BEGINNING WITH ASSEMBLY COMPLETE)	60
5–B.	MULTIPLICATIVE ATTENUATION FACTORS FOR INDUCED ACCELERATIONS AT THE STRUCTURAL MOUNTING INTERFACES TO THE INTERNAL PAYLOAD LOCATIONS	61
5–C.	ALLOWABLE TRANSLATION ACCELERATION MAGNITUDE AT THE RS TO USOS STRUCTURAL INTERFACE FOR TRANSLATIONAL CONTRIBUTIONS OF 25, 50 AND 75% OF THE TOTAL ALLOWABLE (BEGINNING WITH ASSEMBLY COMPLETE)	62
5–D.	ALLOWABLE ROTATIONAL ACCELERATION MAGNITUDE AT THE RS TO USOS STRUCTURAL INTERFACE FOR ROTATIONAL CONTRIBUTIONS OF 25, 50, AND 75% OF THE TOTAL ALLOWABLE (BEGINNING WITH ASSEMBLY COMPLETE)	63
6.	MINIMUM ORBITER APPROACH AND DEPARTURE CORRIDOR	69
7.	MINIMUM RUSSIAN APPROACH AND DEPARTURE CORRIDOR	70
7–A.	DESIGN HOT THERMAL ENVIRONMENT PROFILE	82
7–B.	DESIGN COLD THERMAL ENVIRONMENT PROFILE	83
7–C.	EXTREME HOT THERMAL ENVIRONMENT PROFILE	85
7–D.	EXTREME COLD THERMAL ENVIRONMENT PROFILE	86

TABLE OF CONTENTS – Continued

FIGURES

FIGURE		PAGE
8.	ON–ORBIT ELECTRIC FIELD ENVIRONMENT	87
9.	ALLOWABLE PAYLOAD TO ORBITER INTERNATIONAL ELECTRIC FIELD STRENGTH IN THE CARGO BAY	97
9–A.	MAXIMUM PERMITTED RF EXPOSURE ON THE EMU	98
10.	CREWMEMBER WORK ENVELOPE (DIMENSIONS IN MM)	113
11.	SPACESUIT HELMET FIELD OF VIEW	114
12.	CREWMEMBER WORK ENVELOPE (GLOVED HAND) (DIMENSIONS IN MM)	115
12–A.	TYPICAL BUS	124
13.	SOYUZ VEHICLE DIMENSIONAL ENVELOPE	175
14.	SOYUZ VEHICLE BODY COORDINATE SYSTEMS	176
15.	TEST HARNESS 1	255
16.	TEST HARNESS 2	256
17.	TEST HARNESS 3	257
18.	TIU BUS ISOLATION TEST SET–UP	299

1.0 SCOPE.

This specification establishes the performance, design, development, and verification requirements for the Russian Segment of the International Space Station. Requirements in Section 3.2.1 define the performance level of the Russian Segment as a whole. Requirements in Section 3.7 define the performance of the elements which comprise the Russian Segment. These performance requirements are derived from the functional decomposition, a hierarchical breakdown of capabilities and subtiered functions which the Russian Segment will perform.

Requirements in Section 3.2.1 are based on the top level capabilities of the functional decomposition and have been grouped into states and modes. Requirements in section 3.7 are based on functions which are subtiered to the parent capabilities defined in 3.2.1. Requirements in Sections 3.2.2 through 3.6 are constraints with which the Russian Segment must comply. The performance requirements herein are applicable during nominal operations, maintenance, or contingency events. This specification is applicable to the Permanent Human Capability (PHC) stage of the International Space Station.

Each element level requirement, unless otherwise noted, represents the required performance of the element from the time of its activation, or integration into the Space Station, through to the stage of permanent human capability. This document also identifies incremental performance requirements. Incremental performance requirements are defined as those unique requirements necessary to support the Russian Segment prior to permanent human capability. This version is based upon the 3–31–94 release of the System specification for the Space Station.

1.1 Identification.

This specification is for the Russian Segment. The requirements of this specification only apply to the Russian elements.

AGREED.

1.2 System overview.

The purpose of the Russian Segment (RS) is to provide the following services and capabilities: guidance, navigation and control, propulsion services; (except for the time when the ATV is docked to the SM); electrical power generation, storage, distribution and control; communications and data links to ground support facilities; environmental control and life support; thermal control and heat rejection; data processing, storage and transportation; housekeeping; personal hygiene; food preparation and storage; extravehicular activity; payload utilities; robotic systems; crew and cargo resupply services; delivery and return of crew including unplanned crew return capability; research facilities; ground based resources necessary to process Space Station hardware for launch and return; maintenance of station and payload operations plans and procedures; and real–time operations command, control, and monitoring support to the Space Station. The ground facilities required to support the orbiting facility are included as a part of the Russian Segment.

AGREED.

2.0 APPLICABLE DOCUMENTS.

2.1 Government documents.

2.1.1 Specifications, standards, and handbooks.

NOT APPLICABLE.

2.1.2 Other Government documents, drawings, and publications.

The following other government documents, drawings, and publications form a part of this document to the extent specified herein. Unless otherwise specified, the exact issue shown applies to this segment specification.

NASA/RSA

SSP 50094 Rev A Document for the ISSA Russian Segment plus, June 20, 1997	NASA/RSA Joint Specifications/Standards Joint Standard Team protocols for TIM 21, and NDCs 004, 005, 007, 008, 009, 001A, 013, 006 and 010.

SSP 50146
Ground Safety Requirements
Attachment A
for Russian Elements

SSP 42121
U.S. On–orbit Segment
Initial Release
PMA–1 to RS (FGB)
June 30, 1995
ICD Part 1
w/PIRNS 42121–NA–0020A, (21), (22A), (23), (24), (25B), (26), (27A), (28), (29A), (30), (31), (33), (34), (35), (36), (37), (38), (39B), (40), (41A), (42), (43), (44), (45), (46), (47), (48), (49C), (50), (51), (52), (53), (54), (55), (56), (57), (58), (59), (60), (62), (63), (64), (65B), (66), (67B), (68), (69), (70), (71E), (72C), (73), and (75).

SSP 50227
Russian Segment (SSP, SM, and FGB)
December 5, 1997
to PDGF/SSRMS Interface Control Document

SSP 50342
Revision Initial Release
May 1998

NASA/RSC–E/3411–SSP March 21, 1997 Baseline Version	Delivery of SPP Aboard Shuttle
SSP 50065 CHeCS to RS ICD May, 1998	
SSP 50097 October 18, 1996 w/PIRNs 9A, 15A, 19A, 21, 22, and 25A	SSMB to RS Software ICD
SSP 50269 FGB Control Vehicle (Generic) ICD, Working Draft Interface Control Document June 20, 1997 w/PIRNs 1and 2	
RPO – 0754	Russian Microgravity Control Plan
MIL–STD–1553 Digital Time Division Command/Response Rev B, Notice 2 Multiplex Data Bus September 8, 1986	
MIL–HDBK–1553 Multiplex Applications Handbook Rev A, Notice 1 September 26, 1986	

2.2 Non–Government documents.

NOT APPLICABLE.

2.3 Order of precedence.

In the event of a conflict between the text of this specification and the references cited herein, the text of this specification takes precedence. Nothing in this specification, however, supersedes applicable laws and regulations unless a specific exemption has been obtained.

3.0 SYSTEM REQUIREMENTS.

3.1 System definition.

3.1.1 System description.

The RS is an earth orbiting facility which houses experiment payloads, distributes resource utilities, and supports permanent human habitation for conducting research and science experiments in a microgravity environment.

The RS supplies the ISS with the following services and capabilities: guidance, navigation and control, propulsion services: (except for the time when the ATV is docked to the SM); electrical power generation, storage, distribution and control; communications and data links to ground support facilities; environmental control and life support; thermal control and heat rejection; data processing, storage and transportation; housekeeping; personal hygiene; food preparation and storage; extravehicular activity; crew and cargo resupply services; delivery and return of crew, including unplanned crew return; research facilities; ground based resources necessary to process hardware for launch and return; and real–time operations command, control, and monitoring. The ground facilities required to support the orbiting facility are included as a part of the Russian Segment.

3.1.1.1 Functional Cargo Block (FGB) description.

The Functional Cargo Block is a vehicle used in the initial stages as the primary method for station reboost and attitude control. It contains systems for propulsion, guidance, navigation and control, communications, downlinked telemetry, uplinked commands, electrical power and thermal control. After on–orbit delivery of the Service Module, the Functional Cargo Block will serve as a propellant storage facility for propulsion reboost and attitude control.

3.1.1.2 Service Module (SM) description.

The Service Module is the initial habitation and laboratory module. It is the primary RS element for propulsion, guidance, navigation, and control after SM activation. The SM has the capability to command the thrusters on other RS elements. It provides a capability for station reboost and provides for communication, downlinked telemetry and uplinked commands.

3.1.1.3 Life Support Module (LSM) description.

The Life Support Module provides specific life support functions that compliment those of the U.S. Laboratory Module, the U.S. Habitation Module, and the Service Module. The Life Support Module provides life support expendables, process and station fluids, and atmospheric gases.

3.1.1.4 Docking Compartment (DC) description.

The Docking Compartment is a pressurized volume which interfaces the Russian Segment. It is also usable as an airlock for Extravehicular Activity.

3.1.1.5 Universal Docking Module (UDM) description.

The Russian Universal Docking Module is used to provide ports for attaching Russian modules. This module provides four radial and two axial berthing ports.

3.1.1.6 Soyuz vehicle description.

The Soyuz vehicle provides for delivery and return of crew, including unplanned crew return. The Soyuz vehicle is a self–contained spacecraft equipped with life support, Communication and Tracking (C&T), guidance, and propulsive capability.

3.1.1.7 Cargo Vehicle (CV) description.

The Cargo Vehicle is used for logistics resupply. The Cargo Vehicle will deliver dry cargo as well as water, propellant, and atmospheric gases to the Station. Propellant resupply also includes propellant transfer to the SM and through the SM to the FGB for propellant storage. When the Cargo Vehicle is attached to the on–orbit Space Station, it provides propulsive reboost capability.

3.1.1.8 Science Power Platform description.

The Science Power Platform is delivered to orbit via the Orbiter and is installed using the SSRMS. When installed on the Russian Segment Service Module, the SPP will provide for the following functions:

a. accommodation of 8 high–voltage solar arrays with the capacity of 48 kW, 2 degrees of freedom pointing (drives) and control (sun sensors, avionics, S/W) systems.

b. conversion of power supplied by the solar arrays:

c. heat removal and rejection from the Russian Segment modules using centralized heat removal system.

d. accommodation of propulsive attitude controls (a remote attitude control thruster unit).

e. capability to accommodate scientific and system equipment.

f. accommodation of antenna–feeder devices of the Regul–OS system.

g. accommodates RS mobile robotics system.

3.1.1.9 Reserved.

3.1.1.10 Research Module description.

There are currently 2 Research Modules planned which will provide facilities for science experiments and materials processing.

3.1.1.11 Russian Ground Segment (RGS).

The Russian Ground Segment provides the ground infrastructure capabilities required to support all Russian Space Agency (RSA) flight elements (specified elsewhere in this document), RSA payloads, and selected capabilities supporting the United States Ground Segment (USGS). The RGS provides planning, ground processing, training, communications, and mission operations (esp. command and control) support capabilities for each Russian element and Russian payloads.

3.1.1.12 Docking and Stowage Module (DSM) description.

The Docking and Stowage Module is a pressurized volume which interfaces with the FGB. The DSM provides a docking port for the Soyuz vehicle and provides facilities for Russian internal stowage.

3.1.2 Missions.

The RS mission is to allow conduct of research and science experiments in an earth–orbiting microgravity environment. The RS can be permanently inhabited by a human crew to perform experiments.

3.1.3 Threat.

Not Applicable.

3.1.4 Reserved.

3.1.5 Interface requirements.

3.1.5.1 External interfaces.

The external segment–to–segment interfaces of the Russian Segment are depicted in Figure 1. The following subparagraphs identify the external interfaces of the Russian Segment.

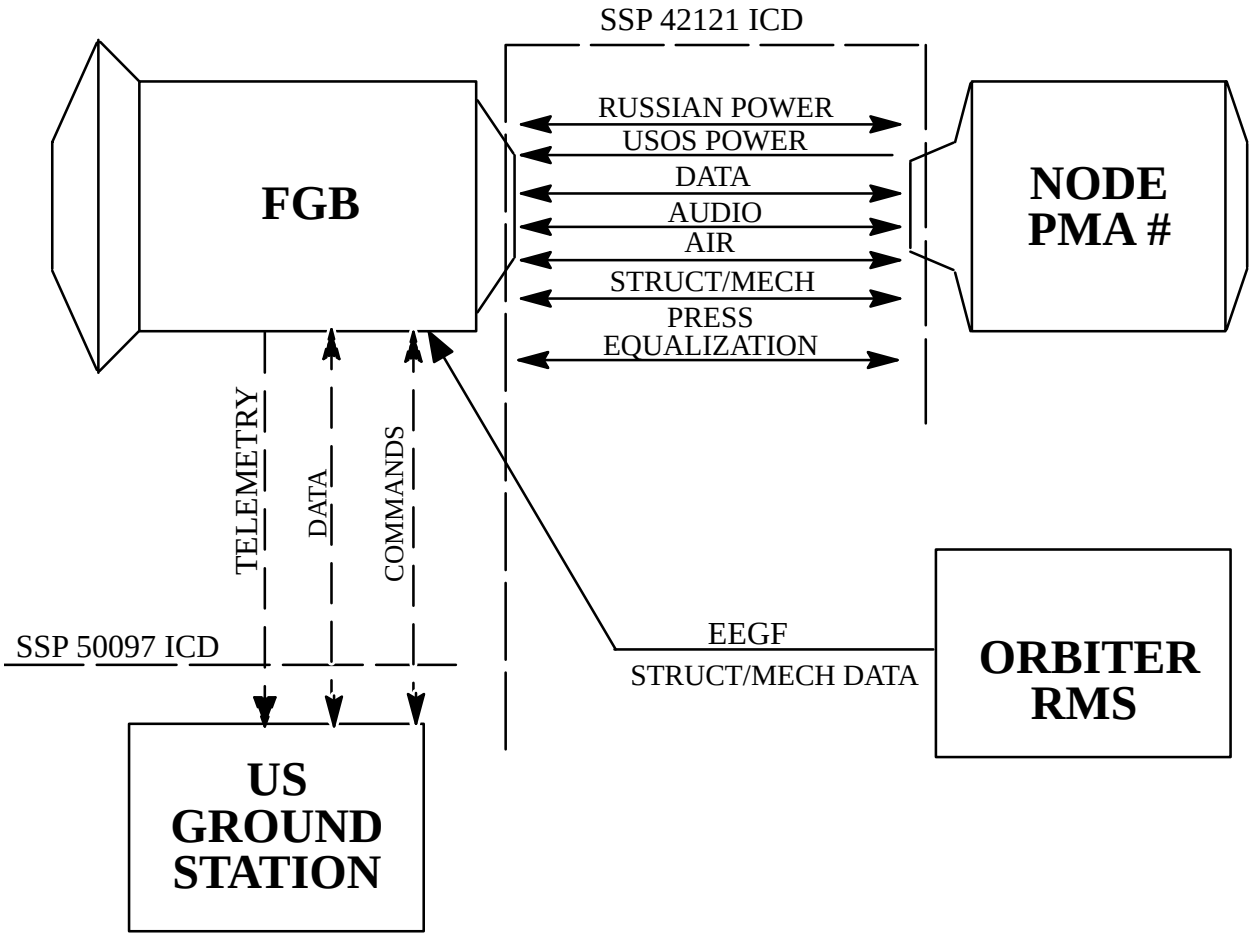

Note: *The requirements for the 1553 data bus upon which the commands/data are transmitted in accordance with SSP 42121 ICD. The actual commands and data transferred across the data bus as specified in SSP 50097 ICD.

FIGURE 1. External RS interfaces

3.1.5.1.1 United States On–orbit Segment (USOS) external interface description.

The RS interface with the USOS consists of a structural/mechanical, and utility connection at the Pressurized Mating Adapter (PMA–1). At this interface, the RS exchanges electrical power, atmosphere, structural and mechanical loads, uplinked commands, downlinked telemetry, and audio data. This interface allows crew, payload and equipment translation between the RS and the USOS.

This interface is applicable in all modes defined by the manned and unmanned perform mission states. The USOS to RS physical and functional interfaces are described in SSP 42121 ICD. The USOS to RS data exchange interfaces are described in SSP 50097 ICD.

3.1.5.1.2 United States Ground Segment external interface description.

The Russian On–orbit Segment (ROS) interfaces with the USGS via the USOS. It supports commanding from the USGS and telemetry to the USGS. All commands and data transferred between the ROS and the USOS shall be in accordance with SSP 50097 ICD. The capabilities of the USGS interface with the ROS via the USOS are limited to the capabilities in SPP 50097 ICD.

3.1.5.1.3 Power Data Grapple Fixture (PDGF) interface.

3.1.5.1.3.1 FGB Power Data Grapple Fixture (PDGF) and Video Signal Converter (VSC) interfaces.

The PDGF consists of the PDGF, PDGF Cable Harness and PDGF Mounting Ring. The (VSC) interfaces consist of the VSC, VSC adapter plate, and VSC Adapter Plate Attachment Bracket. The PDGF provides the attachment point on the FGB for the Space Station Remote Manipulator System (SSRMS) to assist in the assembly of the SPP on–orbit. The FGB will interface with the PDGF via mechanical attachments and electrical connects and will provide structural, thermal, mechanical, power, and data interfaces with the PDGF. The FGB will provide interfaces to the VSC and the VSC Adapter Plate through the VSC Adapter Plate Attachment Bracket. The detailed requirements for the FGB PDGF and VSC interfaces are contained in SSP 50227 ICD.

3.1.5.1.3.2 SPP/SSRMS interface.

The SPP will be berthed to the zenith port of the SM by the SSRMS. The SPP will interface with the SSRMS via the Power Data Grapple Fixture (PDGF). The PDGF will provide the required mechanical/structural, power, and data interfaces for the SPP on–orbit transfer and berthing operations. The detailed definition of the SPP/SSRMS interfaces is contained in SSP 50227.

3.1.5.1.4 Orbiter external interface description.

3.1.5.1.4.1 FGB Orbiter external interface description.

The FGB interface with the Orbiter consists of mechanical and data, command and control. The FGB interfaces the Orbiter through the grapple fixture in accordance with SSP 42121 ICD, Appendix C.

3.1.5.1.4.2 SPP to Orbiter external interface.

The Orbiter will be used to deliver the SPP to the Space Station. The Orbiter will provide power to and command and control of the SPP during transportation to orbit via ROEU interface. This interface will be released prior to the deployment from the Orbiter. The structural/mechanical interface in the Orbiter will be implemented via 4 longeron and 2 keel trunnions. The SPP will be deployed from the Orbiter Payload Bay and transferred to the SSRMS by the Shuttle Remote Manipulator System (SRMS). The SPP will interface with the SRMS via Flight Releasable Grapple Fixture (FRGF) that provides only structural/mechanical interface. The detailed requirements for these physical and functional interfaces are defined in NASA/RSC–E/3411–SPP.

3.1.5.1.5 RS to ATV interface description.

TBD

3.1.5.1.6 Crew external interface description.

The RS interfaces with the crew to allow the monitor and control of user payloads, conduct of scientific experiments, to perform maintenance tasks, and initiate Station attitude control and reboost.

3.1.5.1.7 Orlan pressure suit.

The RS interfaces with the Orlan pressure suit to perform service and checkout functions during Extravehicular Activity (EVA) preparation and support of the EVA crew during suited operations within the DC.

3.1.5.2 Internal interfaces.

The internal interfaces of the Russian Segment are defined in the following subparagraphs. The Russian Segment internal interfaces are shown in Figure 2 and described in the following paragraphs.

3.1.5.2.1 FGB interface.

The FGB interfaces with the SM, the Soyuz Vehicle, UDM, DSM, LSM, Node PMA #1, the RGS, and the USGS (through the USOS). These interfaces can consist of structural, mechanical, service, and atmosphere connections. The FGB will exchange electrical power, atmosphere, structural and mechanical loads, thermal energy, and data including audio, uplinked commands, downlinked telemetry, and video. The FGB interface also includes a propellant transfer interface with the SM. These interfaces are shown in Figure 3.

Further information on the interfaces between the FGB/SM, FGB/DSM, FGB/Soyuz, and FGB/UDM may be found in the RVE–23 document, Requirements to Interfaces Connecting the FGB with other Articles of Russian Orbital Segment.

These interfaces may allow crew, payload and equipment translation between the FGB and the interfacing elements. This interface is applicable in all modes defined by the manned and unmanned perform mission states.

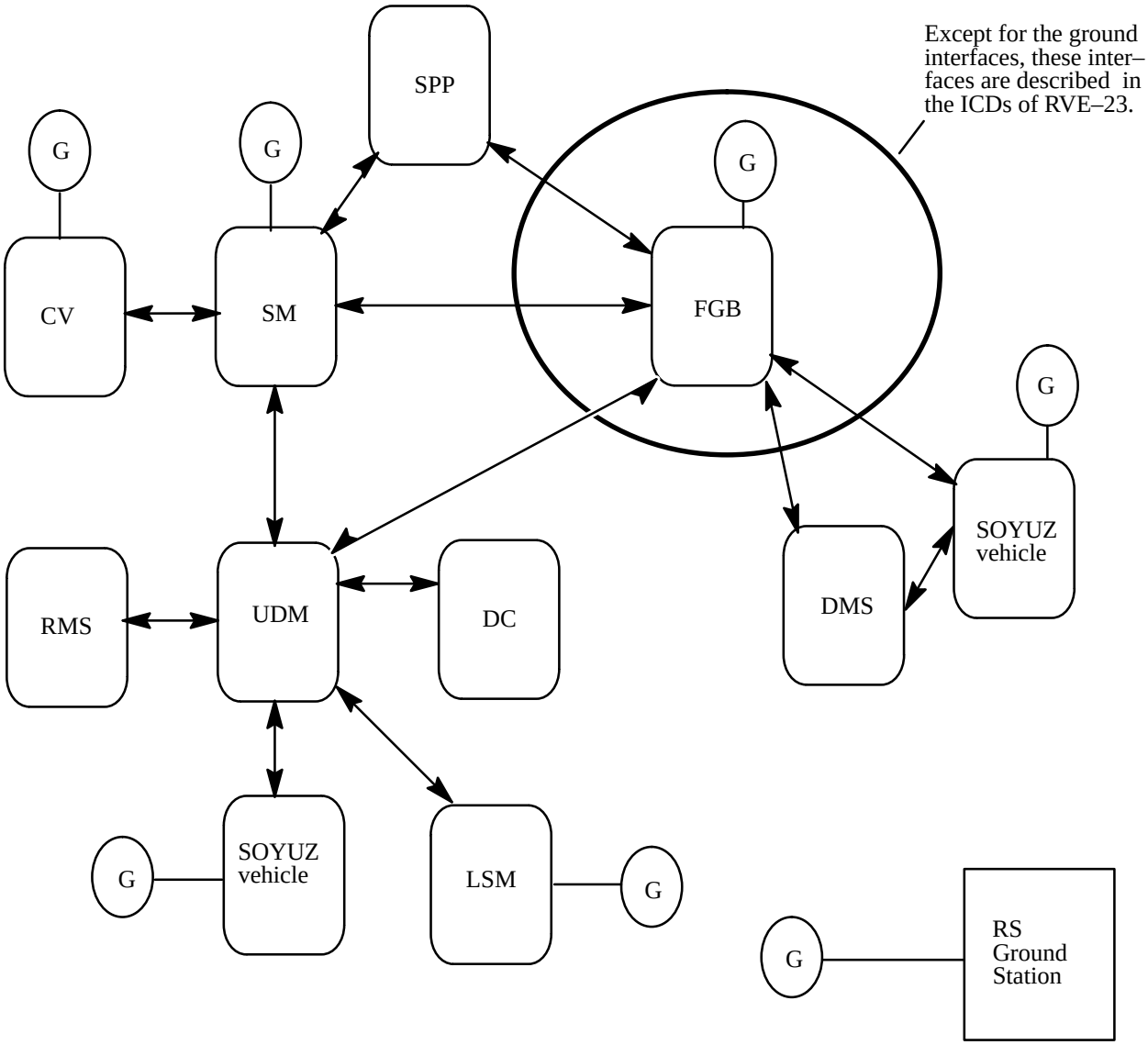

FIGURE 2. RS internal interfaces

NOTE: WHEN SOYUZ IS DOCKED TO FGB, THERE IS:
(1) NO TELEMETRY INTERFACE, AND
(2) NO VIDEO TRANSFER

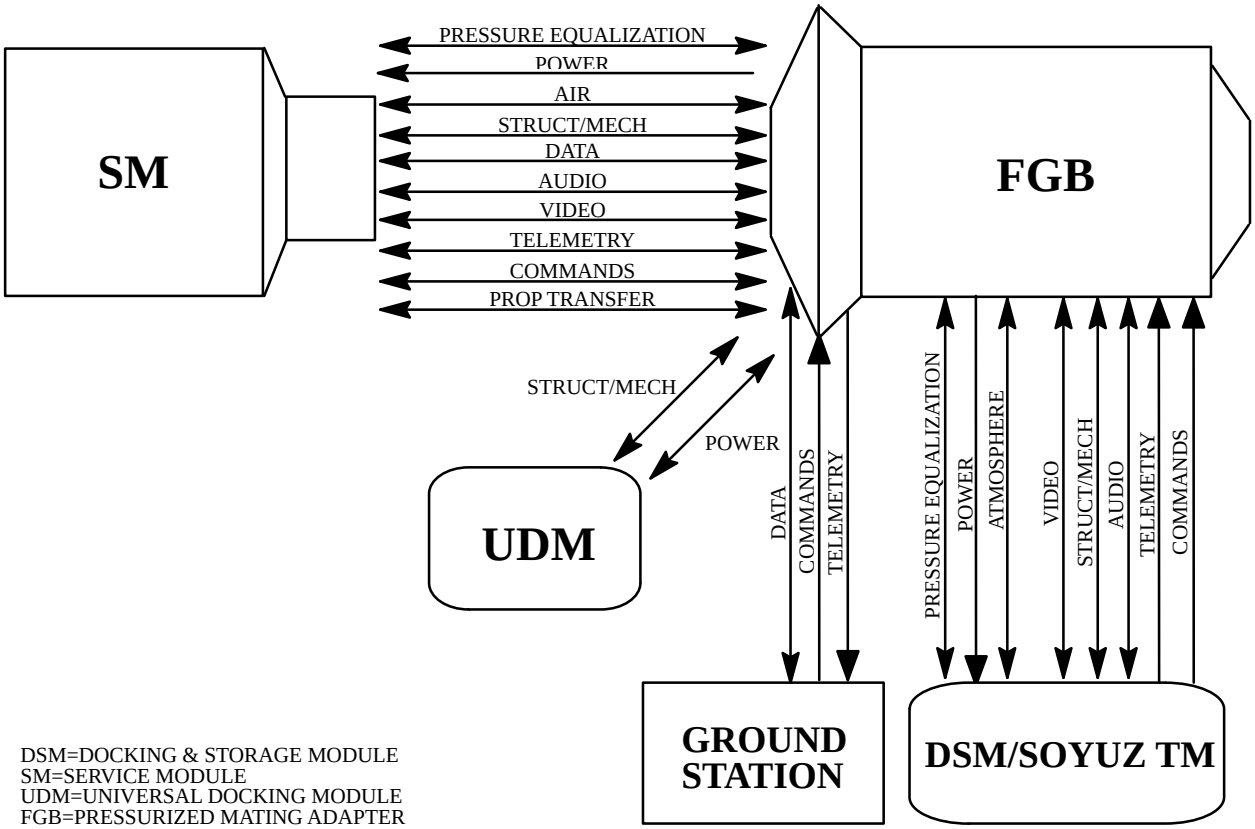

DSM=DOCKING & STORAGE MODULE
SM=SERVICE MODULE
UDM=UNIVERSAL DOCKING MODULE
FGB=PRESSURIZED MATING ADAPTER

FIGURE 3. FGB interfaces

3.1.5.2.2 SM interface.

The SM interfaces with the FGB, Universal Docking Module (UDM), the CV, the SPP, the DC and the RGS. These interfaces consist of structural, mechanical, service, and atmosphere connections. At this interface, the SM exchanges electrical power, atmosphere, structural and mechanical loads, thermal energy, and data including audio, uplinked commands, downlinked telemetry, and video.

This interface allows crew, payload and equipment translation between the FGB and the interfacing elements. The SM interface also includes a propellant transfer interface with the FGB and universal docking module. This interface is applicable in all modes defined by the manned and unmanned perform mission states.

3.1.5.2.3 LSM interface.

The LSM interfaces with the Soyuz vehicle, UDM and the RGS. This interface consists of structural, mechanical, service, and atmosphere connections. At this interface, the LSM and the UDM exchange electrical power, thermal energy, atmosphere, structural and mechanical loads, data including audio, uplinked commands, downlinked telemetry, and video. This interface allows crew, payload, and equipment translation between the LSM and the UDM. This interface is applicable in all modes defined by the manned and unmanned perform mission states.

3.1.5.2.4 DC interface.

The DC interfaces with the UDM, and the RGS. This interface consists of structural, mechanical, service, and atmosphere connections. At this interface, the DC and the UDM exchange electrical power, thermal energy, atmosphere, structural and mechanical loads, data including audio, uplinked commands, downlinked telemetry, and video. This interface is applicable in all modes defined by the manned and unmanned perform mission states.

3.1.5.2.5 UDM interface.

The UDM interfaces with the SM, Research Modules (RM), CV, Soyuz vehicle, and the RGS. These interfaces consist of structural, mechanical, service, and atmosphere connections. At this interface, the UDM exchanges electrical power, thermal energy, atmosphere, structural and mechanical loads, data including audio, uplinked commands, and downlinked telemetry.

This interface allows crew, payload and equipment translation between the UDM and the SM. The UDM interface also includes an auxiliary propellant transfer connection to resupply the FGB and SM. This interface is applicable in all modes defined by the manned and unmanned perform mission states.

3.1.5.2.6 Soyuz vehicle interface.

The Soyuz vehicle will interface with modules on the RS. These interfaces consist of electrical power, atmosphere, structural and mechanical loads, thermal energy, and data including audio and low data rate downlinked telemetry.

This interface allows crew, payload and equipment translation between the Soyuz and the RS. The Soyuz vehicles interface with the RGS for training, planning, and limited communications. This interface is applicable in all modes defined by the manned and unmanned mission states.

3.1.5.2.7 CV interface.

The Cargo Vehicle interfaces with the modules on the RS. These interfaces consist of electrical power, thermal energy, atmosphere, structural and mechanical loads and data. This interface

allows payload, including fluids, and equipment translation as well as propellant transfer between the Cargo Vehicle and the interfacing elements. The Cargo Vehicle interfaces with the RGS for communications and control.

3.1.5.2.8 SPP interface.

The SPP interfaces with the SM and the RGS. These interfaces consist of structural, mechanical, and service connections for the SM and atmosphere exchange with the SM. At this interface, the SPP exchanges electrical power, structural and mechanical loads, thermal energy, and data including audio, uplinked commands, downlinked telemetry, and video. This interface allows crew, payload and equipment translation between the SPP and the interfacing elements. This interface is applicable in all modes defined by the manned and unmanned perform mission states.

3.1.5.2.9 Reserved.

3.1.5.2.10 Research Module interface.

Each of the three Research modules interface with the UDM and the RGS. This interface consists of structural, mechanical, and service connections. At this interface, the RM exchanges electrical power, thermal energy, atmosphere, structural and mechanical loads, and data including audio, uplinked commands, downlinked telemetry, and video. This interface allows crew, payload and equipment translation between the RM and the UDM. This interface is applicable in all modes defined by the manned and unmanned perform mission states.

3.1.5.2.11 Russian Ground Segment.

The RGS interfaces with the Russian Elements described within this section (Section 3.1.5.2). These interfaces consist of Russian facilities, communications systems data, hardware, software, training devices, models, simulations, and tools used internally to perform Russian ground system operations and ground mission operations.

3.1.5.2.12 DMS interface.

The DSM interfaces with the FGB, the Soyuz vehicle, and the RGS. At the FGB interface, the DSM accepts electrical power from the FGB, provides telemetry and commands to the FGB, exchanges atmosphere, structural and mechanical loads and data including audio and video, and has pressure equalization capability. This interface allows crew, payload, and equipment translation between the DSM and the FGB. This interface is applicable in all modes defined by the manned and unmanned perform mission states.

At the Soyuz vehicle interface, the DSM provides electrical power to the Soyuz vehicle from the FGB, accepts telemetry and commands from the Soyuz vehicle, exchanges atmosphere, structural and mechanical loads, and data including audio and video, and has pressure equalization capability. This interface allows crew, payload, and equipment translation between the DSM and the Soyuz vehicle.

3.1.5.2.13 PDGF Stand Interface.

The PDGF stand provides a structural interface between the PDGF assembly and the FGB hull.

3.2 Characteristics.

3.2.1 Performance characteristics.

3.2.1.1 State: Perform mission.

A stable condition of the Space Station defined by the presence of human crew performing the assigned mission. In this state, the presence of the crew determines the set of rules of control on the system and its operational modes.

AGREED.

3.2.1.1.1 Mode: Standard.

This mode represents the core operations of the Station when it is tended or preparing to support a human presence. This mode provides a ”shirt sleeve” environment for the crew. Both internal and external payload operations are being supported, monitored and controlled. The crew can perform Intravehicular Activity (IVA) maintenance actions. The functional capabilities for this mode are in the following paragraphs.

3.2.1.1.1.1 Control atmospheric pressure.

3.2.1.1.1.1.1 Capability: Control total pressure.

The RS shall manually monitor the atmosphere total pressure over the range of 0 to 18.5 psia (0 to 960 mm Hg) with an accuracy of +/–0.04 psia (2 mm Hg). The RS shall automatically monitor the atmosphere total pressure over the range of 0.02 to 19.4 psia (1 to 1000 mm Hg) with an accuracy of +/–0.58 psia (30 mm Hg). The RS shall maintain the atmosphere total pressure of the on–orbit Space Station nominally between 14.2 and 14.9 psia (734 to 770 mm Hg) with a minimum pressure of 13.5 psia (700 mm Hg). The RS shall maintain the atmosphere nitrogen partial pressure of the on–orbit Space Station below 11.6 psia (600 mm Hg).

AGREED.

3.2.1.1.1.1.2 Capability: Control oxygen partial pressure.

The RS shall monitor the ISS atmosphere oxygen partial pressure over a range of 0 to 5.8 psia (0 to 300 mm Hg) with an accuracy of +/–0.23 psia (12 mm Hg) for the range of 0 to 3.9 psia (0 to 200 mm Hg) and an accuracy of +/–0.33 psia (17 mm Hg) for the range of 3.9 to 5.8 psia (200 to 300 mm Hg). The RS shall control the atmosphere oxygen partial pressure in the on–orbit Space Station between 2.83 and 3.35 psia (146 to 178 mm Hg) with a maximum concentration of 24.8% by volume. The RS shall introduce oxygen into the atmosphere to support human metabolic needs of 1.89 lbm per person per day (0.86 kg per person per day) for 6 crewmembers.

AGREED.

3.2.1.1.1.1.3 Capability: Relieve overpressure.

The RS shall provide atmospheric pressure below the maximum allowable design pressure of the Russian Segment.

AGREED.

3.2.1.1.1.1.4 Capability: Equalize pressure.

The RS shall equalize the pressure differential between adjacent, isolated volumes up to 1766 cubic feet (50 cubic meters) at 15.0 psia (775 mm Hg) and 14.3 psia (740 mm Hg) to less than 0.01 psid (0.5 mm Hg) within 3 minutes.

AGREED.

3.2.1.1.1.2 Condition atmosphere.

3.2.1.1.1.2.1 Capability: Control atmosphere temperature.

The RS shall maintain the atmosphere temperature in the RS cabin aisleway within the range of 64 to 82 degrees F (18 to 28 degrees C).

AGREED.

3.2.1.1.1.2.2 Capability: Control atmosphere moisture.

a. The RS shall maintain the atmosphere relative humidity in the RS cabin aisleway within the range of 30 to 70%.

b. The RS shall maintain the atmosphere dewpoint in the RS cabin aisleway within the range of 40 to 60 degrees F (4.4 to15.6 degrees C).

c. The RS shall monitor the water vapor pressure in the RS cabin aisleways over a range of 0 to 30 mm Hg (0 to 0.58 psia) with an accuracy of +/–1.6 mm Hg (0.031 psia) for the range of 0 to 16 mm Hg (0 to 0.31 psia) and an accuracy of +/–3.0 mm Hg (0.06 psia) for the range of 16 to 30 mm Hg (0.31 to 0.58 psia).

AGREED.

3.2.1.1.1.2.3 Capability: Circulate atmosphere.

a. The RS shall maintain an effective atmosphere velocity in the RS cabin aisleway within the range of 10 to 40 feet per minute (0.05 to 0.20 meter per second).

b. The RS shall be able to supply atmosphere to the U.S. Segment at the Russian and U.S. interface in accordance with the joint interface requirements in SSP 42121 ICD, paragraph 3.2.2.3.1.

c. The RS shall be able to receive the returned atmosphere from the U.S. Segment at the Russian and U.S. interface in accordance with the joint interface requirements in SSP 42121 ICD, paragraph 3.2.2.3.2.

AGREED.

3.2.1.1.1.3 Light station.

3.2.1.1.1.3.1 Capability: Control internal lighting.

The RS shall provide lighting control for each compartment and translation path.

AGREED.

3.2.1.1.1.3.2 Capability: Illuminate internal areas.

The RS shall illuminate crew living areas, passageways, and interior crew workstations in support of general task, conduct of experiments, emergency egress, and maintenance. The RS illumination levels shall be as shown in Table I.

TABLE I. RS minimum interior lighting intensity levels

Area	Lux	fc
General, sleeping	20 to 30	1.86 to 2.79
General, working	300	27.9
Worksite(task)	300 to 450	27.9 to 41.9
Filming	800 to 850	74.4 to 79.0
Portable worklights	300 to 500	27.9 to 46.5

AGREED.

3.2.1.1.1.3.3 Accommodate on RS a source of light (navigation light) for Shuttle Star Tracker.

The RS accommodates a US supplied continuous white light source.

a. The RS shall provide structural, thermal, electrical, command (on/off) interfaces and support to the US supplied light in accordance with RSC–E/NASA Protocol No. 9–035/97.

b. The tracking light shall be boresighted at 30 degrees below the ISS/SM X–AXIS. The mounting accuracy of the navigation light shall be +/– 1 degree in any axis.

c. With or without the Soyuz or Progress docked, the Field Of View shall be 60 degrees. When a vehicle of larger diameter than the Soyuz or Progress is docked, the field of view may be less than 60 degrees.

3.2.1.1.1.4 Respond to loss of function.

3.2.1.1.1.4.1 Capability: Isolate to recovery level.

The RS shall automatically isolate detected failures to the functional recovery level for the functions defined in Table II. The RS shall automatically notify operators with results of automatic isolation.

TABLE II. Capabilities requiring automatic FDIR

ISS System Capabilities	Russian Capabilities (1), (2), (3)	Automatic	
		Failure Detection	Isolation/ Recovery
Control atmospheric pressure	Control total pressure	X	
	Control oxygen partial pressure	X	
	Relieve overpressure		
	Equalize pressure		
Condition atmosphere and temperature control (4)	Ventilation (5)	X	
	Hydraulic loops (5)	X	X
	Moisture collection (5)	X	
Support crew interface	Provide data to crew	X	
	Accept crew input and commands	X	

TABLE II. Capabilities requiring automatic FDIR – Continued

ISS System Capabilities	Russian Capabilities (1), (2), (3)	Automatic	
		Failure Detection	Isolation/ Recovery
Monitor system status	Acquire function status data (6)	X	X
	Assess function status data (6)	X	X
Respond to loss of function	Isolate to recovery level (6), (7)	X	X
	Recover lost functions (6), (7)	X	X
	Isolate for safing (6), (7)	X	X
	Safe (6), (7)	X	X
Control station modes	Maintain station mode	X	X
	Transition station modes	X	X
Respond to emergency conditions	Respond to fire (Detection only)	X	
	Respond to rapid decompression	X	
	Respond to hazardous atmosphere		
Provide electrical power	Generate power	X	
	Distribute power (8)	X	X
	Store energy	X	X
Maintain time reference	Distribute time	X	X
Support flight crew	Support radiation exposure monitoring		
Control internal carbon dioxide	Control CO_2	X	
	Control gaseous contaminants	X	
Provide water	Provide water for crew use	X	
Determine navigation parameters (when the ATV is attached to the SM, the Russian Segment does not perform FDIR on the ATV functions).	Determine state vector and attitude	X	X
Control attitude (when the ATV is attached to the SM, the Russian Segment does not perform FDIR on the ATV functions).	Maintain attitude – nonpropulsive	X	X
Support on–orbit to ground communications	Support uplinked data	X	(9)
	Provide data for downlink	X	(9)
Execute translation maneuvers (when the ATV is attached to the SM, the Russian Segment does not perform FDIR on the ATV functions).	Execute maneuver guidance	X	X
	Execute translation thrust	X	X

TABLE II. Capabilities requiring automatic FDIR – Continued

ISS System Capabilities	Russian Capabilities (1), (2), (3)	Automatic	
		Failure Detection	Isolation/ Recovery
Control attitude – propulsive (when the ATV is attached to the SM, the Russian Segment does not perform FDIR on the ATV functions).	Rotational control	X	X
	Provide desaturation torque	X	X

Notes:
(1) RS functions are distributed between several modules. Automated FDIR functions only apply to those modules that provide that function.
(2) All automated FDIR RS functions apply to the SM.
(3) This table does not apply to the FGB.
(4) The ISS system capabilities are condition atmosphere and maintain thermal conditioning.
(5) The RSA system capabilities are documented in paragraphs 3.2.1.1.1.2.1, 3.2.1.1.1.2.2, 3.2.1.1.1.2.3, 3.2.1.1.1.10.1, 3.2.1.1.1.10.2, and 3.2.1.1.1.10.3.
(6) Automatic FDIR for these capabilities will match the automatic FDIR of the function being supported.
(7) Detection and recovery of these functions reflects the computational systems ability to perform these functions.
(8) Computer control of distribution switches only.
(9) Hot backup allows recovery by ground command (running standby computer takes over).

AGREED.

3.2.1.1.1.4.2 Capability: Recover lost function.

a. The RS shall automatically implement pre–defined recovery procedures for failures of the functions defined in Table II.
b. During manned operations, some RS functions will be manually recovered.
c. The RS shall automatically notify operators with results of automatic recovery processes.

AGREED.

3.2.1.1.1.4.3 Capability: Isolate for safing.

The RS shall automatically isolate out of tolerance conditions or functional performance that may manifest a catastrophic or critical hazard. The RS shall automatically notify operators with results of automatic safing isolation processes.

AGREED.

3.2.1.1.1.4.4 Capability: Safe

The RS shall automatically safe out of tolerance conditions or functional performance that may manifest a catastrophic or critical hazard. The RS shall automatically notify operators with results of automatic safing processes.

AGREED.

3.2.1.1.1.5 Control station modes.

3.2.1.1.1.5.1 Capability: Maintain station mode.

a. The RS shall control functions, associated functions and subfunctions consistent with the current mode. Specifically,

(1.) The RS shall reject operator requests for RS mode constrained software controlled functions.

(2.) The RS shall notify the command source upon rejecting a command due to RS mode constraints.

(3.) The RS shall provide an operator ability to force execution of a RS mode constrained software controlled function.

(4.) The RS shall notify the requesting command source when a RS mode constrained software controlled function is being forced to execute.

(5.) The RS shall manage its resources such that 24 hour on–orbit vehicle autonomy is supported and the RS power and thermal resource capabilities are not violated.

(6.) The RS shall manage its resources such that USOS power resource capabilities are not violated.

b. From the activation of the FGB until the activation of the SM:

The FGB shall activate (mode to active attitude control) its attitude control system following receipt of the Orbiter departure indication from the USOS in accordance with SSP 50097.

c. From the activation of the FGB through first Orbiter departure after activation of the USL:

The RS shall activate (mode to active attitude control) its attitude control system within 5.0 seconds (after activation of SM) or 2.5 seconds (prior to activation of SM) of receipt of the Orbiter departure indication from the USOS in accordance with SSP 50097.

d. For all stages:

(1). The RS shall deactivate (mode to free drift) its attitude control system within 5.0 seconds of receipt of the Orbiter capture indication from the USOS in accordance with SSP 50097.

(2). The RS shall provide an indication of the mode of attitude control (either active or free drift) to the USOS in accordance with SSP 50097 within 2.1 seconds of changing the attitude control mode.

(a) From activation of the FGB to activation of the SM: The RS (FGB) shall provide an indication of the mode of attitude control (either active or free drift) to the USOS in accordance with SSP 50097 within 6 seconds of changing the attitude control mode.

(b) From activation of the SM: The RS shall provide an indication of the mode of attitude control (either active or free drift) to the USOS in accordance with SSP 50097 within 2.1 seconds of changing the attitude control mode.

e. From activation of the FGB until activation of the SM:

If a low voltage condition is detected and the RS is unable to provide power to the USOS as specified in Table IV, the RS shall issue power reduction requests to the USOS in accordance with SSP 50097 paragraph 3.4.1.2.2.2.

f. From activation of the SM until activation of U.S. element P6:

If a low voltage condition is detected and the RS is unable to provide power to the USOS as specified in Table IV, the RS shall issue power reduction requests to the USOS in accordance with SSP 50097 paragraph 3.4.3.1.2.2.

g. After activation of the USL:

The RS shall accept commands from the USOS to reduce consumption of USOS–provided power in accordance with SSP 50097, paragraph 3.4.1.1.1.3.

AGREED.

3.2.1.1.1.5.2 Capability: Transition station modes.

The RS shall receive commands issued from the USOS across 1553 data buses in accordance with SSP 42121 ICD, paragraph 3.2.2.5.3, and execute these commands in accordance with SSP 50097 ICD, to establish a new functional configuration based on mode applicability of functions in Table III such that:

a. Software controlled RS functions which are not allowed in the new mode are constrained.

b. Software controlled RS functions which are allowed in the new mode are enabled.

c. Software controlled RS functions which are active, but are not allowed in the new mode are deactivated.

d. Software controlled RS functions which are not active, but are continuous in the new mode are activated.

e. During the mode transition process, the RS shall continue software controlled RS functions which are both active and allowed in both modes.

AGREED.

TABLE III. On–Orbit RS mode/capability applicability

Legend
C = Continuous
A = Allowed
N = Not Allowed

Russian Segment Function (2)	Mode (1)														
	Standard – Habitable (3)	Reboost – Habitable (3)	Maneuver – Habitable (3)	Microgravity – Habitable (3)	Survival – Habitable (3)	Proximity – Habitable (3)	Crew Delivery and Return (3)	External operations – Habitable (3)	Standard – Untended	Reboost – Untended	Maneuver – Untended	Microgravity – Untended	Survival – Untended	Proximity – Untended	External operations – Untended
Equalize pressure	A	A	A	A	A	A	A	A	A	A	A	A	A	A	A
Control atmosphere moisture	C	C	C	C	C	C	C	C	A	A	A	A	A	A	A
Control internal lighting	A	A	A	A	A	A	A	A	A	A	A	A	A	A	A
Illuminate internal areas	A	A	A	A	A	A	A	A	A	A	A	A	A	A	A
Recover lost function	A	A	A	A	A	A	A	A	A	A	A	A	A	A	A
Safe	A	A	A	A	A	A	A	A	A	A	A	A	A	A	A
Provide data to crew	C	C	C	C	C	C	C	C	N	N	N	N	N	N	N
Accept crew inputs/commands	C	C	C	C	C	C	C	C	N	N	N	N	N	N	N
Respond to fire (4)	C	C	C	C	C	C	C	C	C	C	C	C	C	C	C
Respond to hazardous atmosphere	C	C	C	C	C	C	C	C	A	A	A	A	A	A	A
Accommodate crew hygiene/wastes	A	A	A	A	A	A	A	A	N	N	N	N	N	N	N
Accommodate crew privacy	A	A	A	A	A	A	A	A	N	N	N	N	N	N	N
Support crew personal items	A	A	A	A	A	A	A	A	N	N	N	N	N	N	N
Support housekeeping	A	A	A	A	A	A	A	A	N	N	N	N	N	N	N
Support crew health	A	A	A	A	A	A	A	A	N	N	N	N	N	N	N
Support food & water consumption/cleanup	A	A	A	A	A	A	A	A	N	N	N	N	N	N	N
Support food processing	A	A	A	A	A	A	A	A	A	A	A	A	A	A	A
Support internal crew restraint and mobility	A	A	A	A	A	A	A	A	N	N	N	N	N	N	N
Control carbon dioxide	C	C	C	C	C	C	C	C	A	A	A	A	A	A	A
Control gaseous contaminants	C	C	C	C	C	C	C	C	A	A	A	A	A	A	A
Control airborne particulate contaminants	C	C	C	C	C	C	C	C	A	A	A	A	A	A	A
Control airborne microbial growth	C	C	C	C	C	C	C	C	A	A	A	A	A	A	A
Provide water for crew use	C	C	C	C	C	C	C	C	N	N	N	N	N	N	N
Provide direct visual access	A	A	A	A	A	A	A	A	N	N	N	N	N	N	N
Provide remote internal visual access	A	A	A	A	A	A	A	A	A	A	A	A	A	A	A
Transmit voice communication	A	A	A	A	A	A	A	A	N	N	N	N	N	N	N
Receive voice communication	A	A	A	A	A	A	A	A	N	N	N	N	N	N	N
Maintain attitude nonpropulsive	A	A	A	A	A	A	A	A	A	A	A	A	A	A	A

TABLE III. On–Orbit RS mode/capability applicability – Continued

Legend
C = Continuous
A = Allowed
N = Not Allowed

Russian Segment Function (2)	Mode (1)														
	Standard – Habitable (3)	Reboost – Habitable (3)	Maneuver – Habitable (3)	Microgravity – Habitable (3)	Survival – Habitable (3)	Proximity – Habitable (3)	Crew Delivery and Return (3)	External operations – Habitable (3)	Standard – Untended	Reboost – Untended	Maneuver – Untended	Microgravity – Untended	Survival – Untended	Proximity – Untended	External operations – Untended
Support internal equipment translation	A	A	A	A	A	A	A	A	N	N	N	N	N	N	N
Support internal equip removal and replacement	A	A	A	A	A	A	A	A	N	N	N	N	N	N	N
Support internal equipment identification	A	A	A	A	A	A	A	A	N	N	N	N	N	N	N
Support internal equipment restraint	A	A	A	A	A	A	A	A	A	A	A	A	A	A	A
Support orbit replaceable unit repair	A	A	A	A	A	A	A	A	N	N	N	N	N	N	N
Store internal equipment	A	A	A	A	A	A	A	A	A	A	A	A	A	A	A
Support external input data	A	N	N	N	A	A	A	N	A	N	N	N	A	A	N
Provide data for external vehicles	A	N	N	N	A	A	A	N	A	N	N	N	A	A	N
Support external vehicle wave–off	N	N	N	N	A	A	A	N	N	N	N	N	A	A	N
Execute maneuver guidance	N	C	N	N	N	N	N	N	N	C	N	N	N	N	N
Execute translational thrust	N	C	N	N	N	N	N	N	N	C	N	N	N	N	N
Provide desaturation torque	A	A	A	N	A	A	A	A	A	A	A	N	A	A	A
Rotational control	N	C	C	N	A	A	A	A	N	C	C	N	A	A	A
Limit accelerations	N	N	N	C	N	N	N	N	N	N	N	C	N	N	N
Illuminate external work sites and translation	N	N	N	N	N	N	N	A							
Support unplanned return of crew	N	N	N	N	N	N	A	N	N	N	N	N	N	N	N
Support voice and data communications	N	N	N	N	N	N	N	A	N	N	N	N	N	N	N
Transfer external crew and hardware	N	N	N	N	N	N	N	A	N	N	N	N	N	N	N
Support station ingress	N	N	N	N	N	N	N	A	N	N	N	N	N	N	N
Track external crew	N	N	N	N	N	N	N	A	N	N	N	N	N	N	N
Scheduled crew delivery and return	N	N	N	N	N	A	N	N	N	N	N	N	N	N	N
Provide data to crew	C	C	C	C	C	C	C	C	N	N	N	N	N	N	N
Accept crew inputs/commands	C	C	C	C	C	C	C	C	N	N	N	N	N	N	N

(1) Ground processing, space transport, personnel preparation, and operations planning modes are not included on this chart as no Russian Segment function identified is applicable.
(2) All other Russian Segment functions that are not listed on this table but are allocated to the listed modes are considered ”CONTINUOUS”.
(3) Habitable Modes are not applicable to FGB prior to docking with SM.
(4) Suppression is only available during manned mode. The capability for detection and isolation is available during all modes.

AGREED.

3.2.1.1.1.5.3 Capability: Support execute attitude control handover operations.

a. From activation of the USOS Stage 5A GN&C and C&C flight software:

(1) The RS shall have the capability to accept manual transfer of control authority from the USOS.

(2) The RS shall have the capability to support manual transfer of attitude control authority to the USOS.

AGREED.

3.2.1.1.1.6 Support crew control interface.

3.2.1.1.1.6.1 Capability: Provide data to crew.

a. The RS shall acquire and present configuration status and annunciation message data to the crew in the USOS in accordance with SSP 50097 ICD and to the crew in the RS. The status and message data shall be transmitted across 1553 data buses in accordance with SSP 42121 ICD, paragraph 3.2.2.5.3.

b. The RS shall provide facilities for the visual and aural annunciation of Class 1 (Emergency), Class 2 (Warning), and Class 3 (Caution) alarms generated by the USOS and RS. The visual and aural annunciation data shall be presented to the crew in accordance with SSP 50094, section 6.6.

c. The RS shall report Class 1, 2, and 3 C&W events detected within the RS to the USOS in accordance with SSP 50097 within 2.85 seconds from confirmation of the detected event.

d. The RS Central Computer shall provide visual and aural annunciation of C&W events within 1.85 seconds from receipt of C&W event visual and aural annunciation notification from the USOS in accordance with SSP 50097.

AGREED.

3.2.1.1.1.6.2 Capability: Accept crew inputs and commands.

a. The RS shall accept, validate, and acknowledge inputs and commands from the crew located in the USOS in accordance with SSP 50097 ”SSMB to RS Software ICD”, and from the crew located in the RS.

b. The RS shall provide the capability for the crew to acknowledge and control alarm annunciations generated by the USOS in accordance with SSP 42121, paragraph 3.2.2.5.1, and generated by the RS. The crew input interfaces shall be in accordance with SSP 50094, section 6.6.

AGREED.

3.2.1.1.1.6.3 Capability: Provide Crew Control Interface.

The RS shall provide the capability for crew interactive control of on–orbit ISS critical systems, caution and warning messages, and integrated plan functions using a portable U.S. laptop computer. Two computer receptacles shall be located in the SM and the FGB that can be used by the portable U.S. laptop computer for crew interactive control.

AGREED.

3.2.1.1.1.7 Monitor system status.

3.2.1.1.1.7.1 Capability: Acquire function status data.

a. The RS shall acquire RS performance, configuration and status data, and out–of–tolerance conditions for RS allocated functions including catastrophic and critical hazards.

b. The RS shall make this data available for Space Station system function status assessment to the USOS in accordance with SSP 50097 ICD, and to the RS Ground Segment.

AGREED.

3.2.1.1.1.7.2 Capability: Assess function status data.

a. The RS shall assess the acquired data to determine RS function status and to detect the occurrence of out–of–tolerance conditions, pre–defined failures, and catastrophic or critical hazard events within the RS requiring crew or on–orbit automated response.

b. The RS shall classify each abnormal event as a Class 1 (Emergency), Class 2 (Warning) or Class 3 (Caution) alarm event.

c. On the occurrence of an alarm event, the RS shall notify the crew interface function so that the appropriate alarm annunciations can occur.

d. The RS shall automatically detect out–of–tolerance conditions related to catastrophic or critical hazards.

e. The RS shall make the assessed status, alarm event, and hazard condition data available for the USOS in accordance with SSP 50097 ICD.

AGREED.

3.2.1.1.1.8 Respond to emergency conditions.

3.2.1.1.1.8.1 Capability: Respond to fire.

The RS shall detect a fire event in locations in accordance with the selection criteria in Figure 4. The RS shall isolate a fire event within 30 seconds of detection, including removal of power and forced airflow at the affected location, in accordance with the selection criteria in Figure 4. The RS shall provide Portable Breathing Apparatuses (PBAs) and Portable Fire Extinguisher (PFEs).

The RS shall provide fixed and/or portable fire suppression. The RS shall activate a Class I alarm for a detected fire event. The RS shall visually indicate a fire event. The RS shall prevent forced air circulation between modules within 30 seconds of annunciation of a Class I fire alarm. Fixed fire suppression, if installed, shall complete application of fire suppressant within one minute of initiation. The RS fire suppression shall eliminate the fire event within one minute of suppressant discharge. The RS shall have fixed fire suppression, if installed, in locations in accordance with the selection criteria in Figure 4. Fixed fire suppression, if installed, shall have remote activation capability. The RS shall restore the habitable environment after a fire event.

AGREED.

3.2.1.1.1.8.2 Capability: Respond to rapid decompression.

a. The RS shall detect a decompression of greater than 1.0 psi per hour (52 mm Hg per hour). The RS shall activate a Class I alarm for a RS detected decompression or based on notification of a decompression event from the USOS in accordance with SSP 50097, paragraph 3.4.1.1.1.

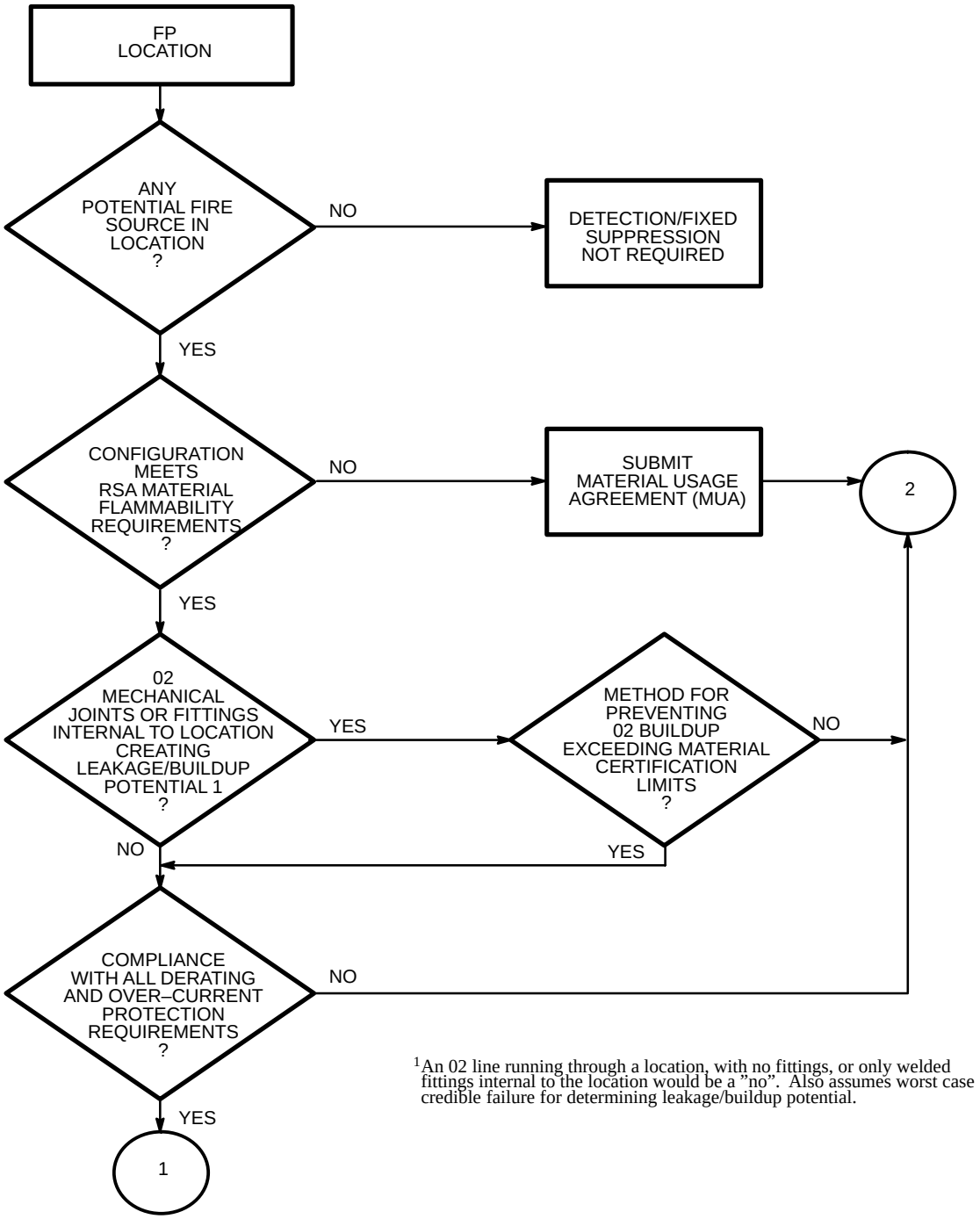

[1]An 02 line running through a location, with no fittings, or only welded fittings internal to the location would be a ”no”. Also assumes worst case credible failure for determining leakage/buildup potential.

FIGURE 4. Fire protection selection criteria

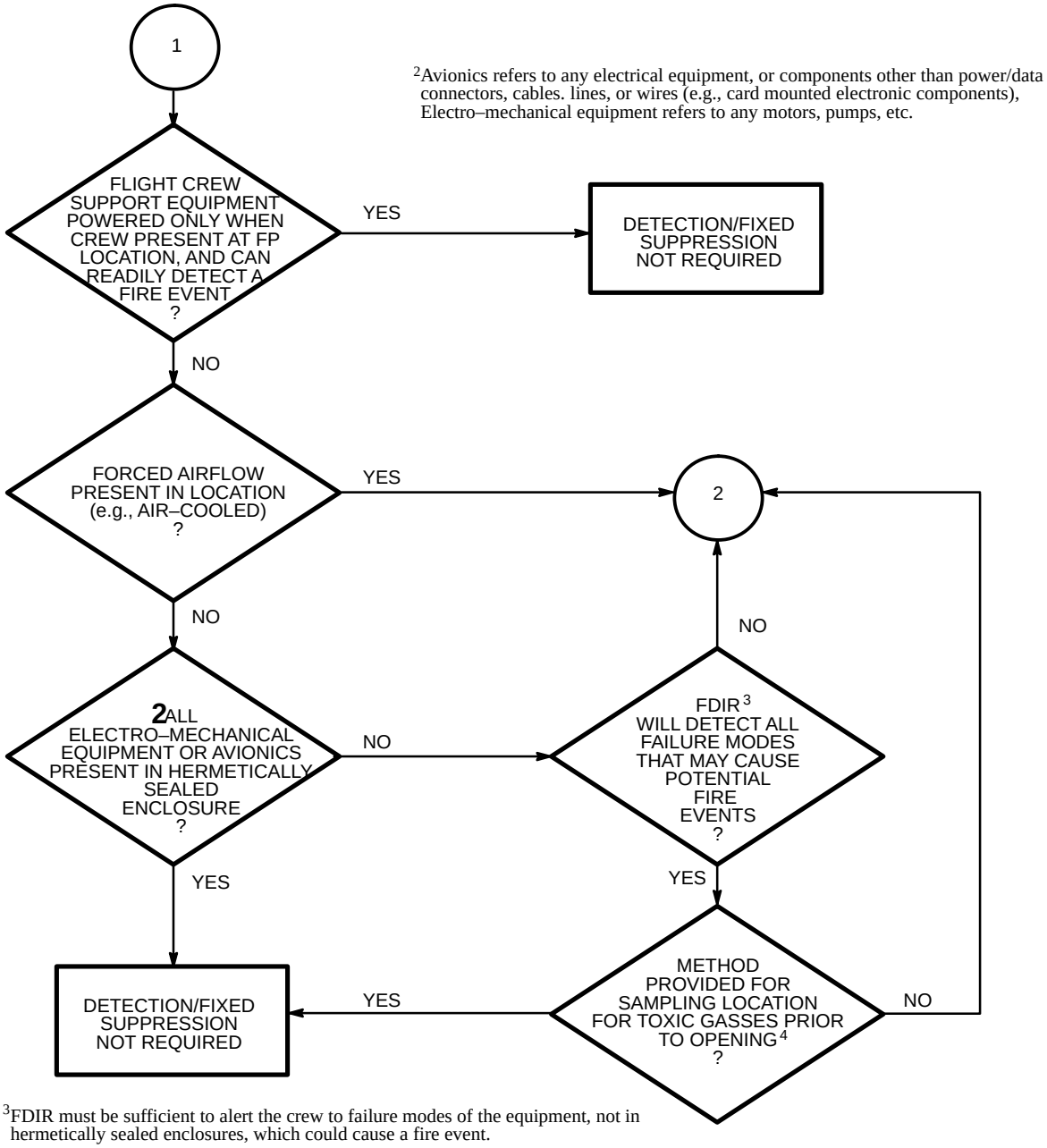

[2]Avionics refers to any electrical equipment, or components other than power/data connectors, cables. lines, or wires (e.g., card mounted electronic components), Electro–mechanical equipment refers to any motors, pumps, etc.

[3]FDIR must be sufficient to alert the crew to failure modes of the equipment, not in hermetically sealed enclosures, which could cause a fire event.

[4] Sampling is intended to allow the crew to avoid opening a location which may contain a buildup of hazardous offgassing.

FIGURE 4. Fire protection selection criteria (cont.)

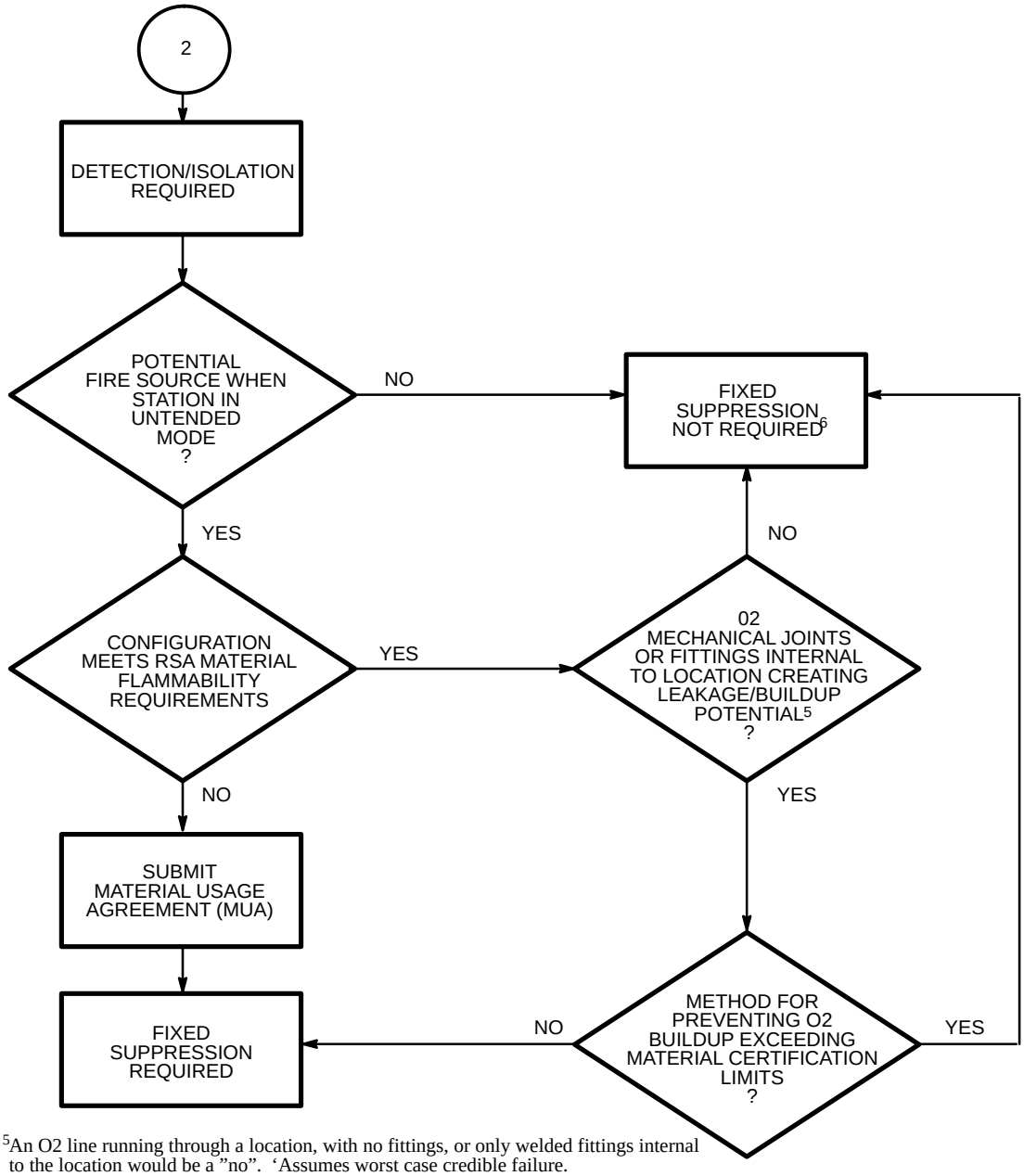

[5]An O2 line running through a location, with no fittings, or only welded fittings internal to the location would be a ”no”. ‘Assumes worst case credible failure.

[6]Based on capability of crew to perform suppression via Portable Fire Extinguishers (PFE’s) for locations which will be powered only when station is tended. When the station is untended the material control and no O2 leakage/buildup potential will prevent a fire from propagating.

FIGURE 4. Fire protection selection criteria (cont.)

b. The RS shall isolate all RS modules by prevention of forced air circulation in and between modules, stop oxygen introduction from the water electrolysis unit, close all external vents and activate the RS depressurization airflow sensor assemblies within 60 seconds of annunciation of a Class 1 depressurization alarm.

AGREED.

3.2.1.1.1.8.3 Capability: Respond to hazardous atmosphere.

The RS shall provide a 15 minute supply of portable emergency breathing capability per crewmember.

AGREED.

3.2.1.1.1.9 Provide electrical power.

3.2.1.1.1.9.1 Capability: Generate power.

The RS shall have the capability to generate electric power for housekeeping and sustaining operations for the RS, and for its external interfaces during insolation and eclipse periods.

AGREED.

3.2.1.1.1.9.2 Capability: Distribute power.

a. The RS shall distribute power for RS housekeeping and sustaining operations.

b. The power interface designs shall support the power transfer levels described in Table IV.

c. All power at the USOS interface shall be in accordance with SSP 42121, paragraph 3.2.2.4, Electrical Interfaces.

d. All power at the Russian element interfaces shall be in accordance with Russian requirements.

e. The Russian segment and FGB shall support the U.S. segment power demands, until flight 5A, in accordance with Table IV.

AGREED.

TABLE IV. Power interface capabilities

Interface	Power Transferred
1. Power transferred to SM from U.S. (across the FGB)	1. (a.) 4.5 kW daily average with a maximum 5.7 kW peak for 3 hours per day from stage 4A through flight 13A. (b.) 5.0 kW maximum available after flight 15A. Power transfer only when a failure has occurred on the Russian segment and the U.S. segment has sufficient power available.
2. Power transferred to DSM from UDM. (across the FGB)	2. 3.0 kW maximum available.
3. Power transferred to DSM/Soyuz TM from SM.	3. 1.0 kW maximum available.
4. Power provided to PMA–1 from FGB.	4. (a.) 0.8 kW daily average and a maximum 2.0 kW peak for 4.5 hours per day from flight 2A to 1R. (b.) 1.2 kW daily average and a maximum 2.0 kW peak for 4.5 hours per day from flight 1R to 5A.
5. Power provided to FGB from PMA–1.	5. 1.5 kW daily average and a maximum 3.0 kW peak for 4.5 hours per day applicable from stage 4A to end–of–life and as the energy balance dictates.
6. Power received by FGB from SM.	6. 1.5 kW daily average and a maximum 3.0 kW peak for 4.5 hours per day applicable from stage 1R to end–of–life and as the energy balance dictates.(Note: This capability would only be used in a contingency situation.)

TABLE IV. Power interface capabilities – Continued

Interface	Power Transferred
7. Power transferred to FGB from SPP (Across SM).	7. 1.5 kW daily average and a maximum 3.0 kW peak for 4.5 hours per day applicable from stage 9A to end–of–life and as the energy balance dictates.
Note: This table represents power transfer capability requirements only. The actual power provided or transferred during operation of the vehicle will be dictated by the real–time integrated vehicle energy balance for each stage, mode of operation, flight attitude, and beta angle.	

AGREED.

3.2.1.1.1.9.3 Capability: Store energy.

The RS shall have the capability to store energy during the insolation period to provide power during the eclipse period.

AGREED.

3.2.1.1.1.10 Maintain thermal conditioning.

3.2.1.1.1.10.1 Capability: Collect thermal energy.

The RS shall collect thermal energy from RS internal sources to maintain thermal conditioning.

AGREED.

3.2.1.1.1.10.2 Capability: Transmit thermal energy.

The RS shall transmit thermal energy to maintain thermal conditioning of the RS internal sources.

AGREED.

3.2.1.1.1.10.3 Capability: Dispose of thermal energy.

The RS shall dispose thermal energy to maintain thermal conditioning of the RS internal sources.

AGREED.

3.2.1.1.1.11 Maintain time reference.

3.2.1.1.1.11.1 Capability: Distribute time.

a. After activation of the USOS Station Management Control processor, the RS shall receive a time message from the USOS at a rate of 1 Hz.

b. The RS shall compare the current time from the USOS with the current RS time and make available the difference (the error offset) for collection by the USOS at a rate of 1 Hz.

c. The RS shall manage the RS internal distribution of time.

d. Reserved.

e. Prior to activation of the USOS Station Management and Control Processor, the RS shall maintain RS local time independent of and USOS time reference source. The RS local time shall be available for USOS access.

AGREED.

3.2.1.1.1.12 Support flight crew.

The RS shall support the Flight Crew capability requirements for three ISS crewmembers.

AGREED.

3.2.1.1.1.12.1 Capability: Accommodate crew hygiene and wastes.

The RS shall provide facilities for personal hygiene and collection, processing, and disposal of crew metabolic waste. The RS shall accommodate collection, treatment, and disposal of menstrual discharge and associated absorbent material. The RS shall accommodate the collection, containment, and disposal of emesis. The RS shall accommodate internal disposal of external collected crew wastes. Crew hygiene accommodations shall support the crew member during post external cleanup. The RS shall accommodate the collection of crew fecal solids, liquids, gases, particulates, and the disposal of associated consumables materials.

The RS shall accommodate the collection and disposal of urine and associated consumable material. The RS shall accommodate personal grooming for crew skin care, shaving, hair grooming, and nail trimming. The RS shall accommodate collection, processing, and disposal of crew hygiene wastes, including soap, expectorants, hair, nail trimmings, and hygiene water. The RS shall accommodate simultaneous whole body skin and hair cleansing.

AGREED.

3.2.1.1.1.12.2 Capability: Support radiation exposure monitoring.

The RS shall support monitoring of crew exposure to radiation in accordance with SSP 50065, CHeCS to RS ICD.

AGREED.

3.2.1.1.1.12.3 Requirements for the RS Crew Quarters.

a. The RS shall provide one Crew Quarters to each of the three members of the ISS crew during the assembly phase of the ISS.

b. Privacy – Each of the RS Crew Quarters shall provide the crew with a personal and private (visual, acoustic, and lighting isolation) space. The RS Crew Quarters shall provide for the donning and doffing of clothing, rest, sleep, and personal activities. The portable crew quarters shall be convertible at crew member option to a sleeping space either open to the module environment or closed.

c. Acoustics – The maximum noise level inside all of the fully–assembled RS Crew Quarters shall be in compliance with the level specified in SSP 50094 Table 6.5.2.4.1–1.

d. Stowage of Personal Effects – Each of the RS Crew Quarters shall provide the crew members with TBD volume of internal stowage for stowing personal belongings. Additional stowage shall be provided either internal to or nearby the Crew Quarters, at crew member discretion.

e. Attachment – The portable crew quarters shall have a structural interface that allows the crew quarters to be installed in various locations in the RS, at crew discretion.

f. For launch, re–location or long–term storage, the portable crew quarters shall be reconfigurable to occupy as small a volume as possible. It shall be capable of being transported through all ISS hatches.

g. Lighting and Ventilation – The portable crew quarters shall connect to the module's power system, in order to provide for autonomous lighting and ventilation systems.

h. Each of the RS Crew Quarters shall provide lighting within the crew quarters for crew reading and ambient light. The lighting shall be controllable from inside the Crew Quarters.

i. Lighting levels provided shall be in accordance with SSP 41163, paragraph 3.2.1.1.1.33.

j. Each of the RS Crew Quarters shall provide TBD cubic meters of airflow per minute. Diffusers shall be provided to directed the airflow at the option of the crewmember.

k. Restraints – Each of the RS Crew Quarters shall provide internal restraints for securing items used inside the crew quarters, including the sleeping bag, portable lights, clothing, personal items, detachable working surface. The RS Crew Quarters shall provide attachment mechanisms in various locations for positioning these restraints.

l. Padding – Each of the RS Crew Quarters shall provide internal padding to prevent crew injury.

AGREED.

3.2.1.1.1.12.4 Capability: Support crew personal items.

The RS shall provide storage volume for crew equipment and consumables.

AGREED.

3.2.1.1.1.12.5 Capability: Support housekeeping.

The RS design shall support routine cleaning, microbial sampling, and trash collection in pressurized compartments. The capture volumes for airborne particles, shall be accessible for replacement or cleaning without dispersion of the trapped materials. The RS shall provide facilities for collection and isolation of trash distributed throughout the pressurized volumes. Collected trash shall be isolated, contained, and stored for ultimate disposal.

The RS shall support microbial monitoring of internal surfaces in its modules to detect the presence of bacteria from 0 to 10 Colony Forming Unit (CFU) per cm2 and fungi from 0 to 1 CFU per cm2, using both U.S. and Russian equipment in accordance with SSP 50065 ICD.

AGREED.

3.2.1.1.1.12.6 Capability: Support crew health.

The RS shall accommodate a 610 mm (24 inch) diameter path for translation of an ill or injured crew member. The RS shall support facilities for health care equipment and microgravity countermeasures according to SSP 50065, CHeCS to RS ICD.

AGREED.

3.2.1.1.1.12.7 Capability: Support food and water consumption and cleanup.

The RS shall provide the capability to support food consumption and cleanup as specified in SSP 50094, paragraph 6.3.3. The RS shall provide ambient potable water and heated potable water.

AGREED.

3.2.1.1.1.12.8 Capability: Support food processing.

The RS shall provide refrigerated and ambient storage volume . Food storage for a minimum of one week shall be located in the area where food is processed and consumed. The RS shall provide the capability to rehydrate food. The RS shall provide the capability to heat food and liquids. The RS shall provide the capability to chill food and liquid.

AGREED.

3.2.1.1.1.12.9 Capability: Provide food.

The RS shall provide food per the nutritional requirements identified in SSP 50094, section 6.3.3.1.6.

AGREED.

3.2.1.1.1.12.10 Capability: Support internal crew restraint and mobility

The RS shall support internal crew translation through pressurized volumes in accordance with SSP 50094, paragraphs 6.3.1, 6.3.2, 6.4.3, and 6.4.4. Handholds and handrails shall be incorporated into the interior of the pressurized volumes to facilitate the crew's mobility and stability.

a. Fixed or portable inside vehicular activity mobility aids shall be provided at the following locations:

(1) Mobility aids shall be placed around workstations, access hatches, doors, windows, and pressure hatches.

(2) Mobility aids shall be located at designated terminal points and direction change points on established crew translation paths.

(3) Crew mobility aid provisions shall be made for inside EVA suited operations.

(4) Translation and mobility handholds shall be located where the crewmember is protected from identified hazards.

(5) The orientation and locations of translation and mobility handholds shall be consistent with the crew tasks they are supporting.

b. Inside vehicular activity crew restraints shall be provided at the following locations:

(1) Restraints shall be provided at identified locations where crewmembers are expected to exert forces which cause the body to move in reaction.

(2) Provide personnel restraints at crew stations.

c. Inside vehicular activity personnel restraints shall comply with the following requirements:

(1) Restraint design shall eliminate muscular tension.

(2) The personnel restraint system shall be capable of on–orbit cleaning and repair.

(3) All fixed and portable internal vehicle handholds and handrails shall be designed to an ultimate load of 445 N(100 lbf) applied in any direction without failure or damage.

(4) When hook and loop fasteners are used as a restraint, the item to be restrained shall be equipped with the hook type fastener and the restraining surface shall be equipped with the loop type fastener.

d. The following requirements apply to all inside vehicular activity fixed and portable foot restraints:

(1) All foot restraints shall maintain foot position to allow the crewmember a complete range of motion (roll, pitch, and yaw).

(2) Inside vehicular activity foot restraints and covers shall allow ventilation to the feet.

(3) The foot restraint shall be capable of being removed for replacement/repair.

(4) Foot restraints shall be designed to withstand a tension load of 445 N (100lbf) as a minimum. Foot restraints shall withstand a torsion load of 100 Nm (75 lbf) as a minimum with the torsion vector parallel to the floor.

e. All inside vehicle mobility paths shall comply with the following requirements:

(1) The minimum cross sectional dimensions of microgravity translation paths for one crewmember in light clothing shall be 65 cm.

(2) A minimum interior cross section dimension of 80 cm shall be maintained to support equipment translation.

(3) Equipment exposed to the translation path shall be designed to withstand a design load of 556 N (125 lbf) and a minimum ultimate load of 778 N (175 lbf).

(4) Non–structural closures shall be capable of sustaining crew–imposed minimum design load of 556 N (125 lbf) and a minimum ultimate load of 778 N (175 lbf).

AGREED.

3.2.1.1.1.13 Control internal carbon dioxide and contaminants.

3.2.1.1.1.13.1 Capability: Control carbon dioxide.

The RS shall control the carbon dioxide partial pressure in the atmosphere of the pressurized volumes. The RS shall control the carbon dioxide partial pressure to a maximum crew member

daily average of 0.10 psia (5.3 mm Hg). Carbon dioxide partial pressure peak levels shall be no greater than 0.147 psia (7.6 mm Hg). The RS shall remove 2.2 lbm per person per day (1 kg per person per day) carbon dioxide from the atmosphere to support human metabolic needs for six crew members for normal operations. The RS shall dispose of waste carbon dioxide removed from the atmosphere. The RS shall monitor atmospheric carbon dioxide levels over a range of 0 to 0.48 psia (0 to 25 mm Hg) with an accuracy of +/–0.038 psi (2 mm Hg).

AGREED.

3.2.1.1.1.13.2 Capability: Control gaseous contaminants.

a. The RS habitable atmosphere shall be maintained below Table V SMAC levels for crew health purposes.

b. The RS shall have control capability to meet Table VI removal rates. The RS shall dispose of trace gases removed from the atmosphere.

c. The RS shall accommodate U.S. provided air monitoring equipment in accordance with SSP 50065, CHeCS to RS ICD.

AGREED.

TABLE V. Spacecraft maximum allowable concentrations

		Potential Exposure Period				
Chemical		1 h	24 h	7 d	30 d	180 d
Acetaldehyde	mg/m^3	20	10	4	4	4
Acrolein	mg/m^3	0.2	0.08	0.03	0.03	0.03
Ammonia	mg/m^3	20	14	7	7	7
Carbon dioxide	mm Hg	10	10	5.3	5.3	5.3
Carbon monoxide	mg/m^3	60	20	10	10	10
1,2–Dichloroethane	mg/m^3	2	2	2	2	1
2–Ethoxyelthanol	mg/m^3	40	40	3	2	0.3
Formaldehyde	mg/m^3	0.5	0.12	0.05	0.05	0.05
Freon 113	mg/m^3	400	400	400	400	400
Hydrazine	mg/m^3	5	0.4	0.05	0.03	0.005
Hydrogen	mg/m^3	340	340	340	340	340
Indole	mg/m^3	5	1.5	0.25	0.25	0.25
Mercury	mg/m^3	0.1	0.02	0.01	0.01	0.01
Methane	mg/m^3	3800	3800	3800	3800	3800
Methanol	mg/m^3	40	13	9	9	9
Methyl ethyl ketone	mg/m^3	150	150	30	30	30
Methyl hydrazine	mg/m^3	0.004	0.004	0.004	0.004	0.004
Dichloromethane	mg/m^3	350	120	50	20	10

TABLE V. Spacecraft maximum allowable concentrations – Continued

		Potential Exposure Period				
Chemical		1 h	24 h	7 d	30 d	180 d
Octamethyltrisiloxane	mg/m^3	4000	2000	1000	200	40
2–Propanol	mg/m^3	1000	240	150	150	150
Toluene	mg/m^3	60	60	60	60	60
Trichloroethylene	mg/m^3	270	60	50	20	10
Trimethylsilanol	mg/m^3	600	70	40	40	4
Xylene	mg/m^3	430	430	220	220	220

TABLE VI. Current Russian capabilities

		Potential Exposure Period					
Chemical		15 d	30 d	60 d	90 d	180 d	360 d
Acetaldehyde	mg/m^3	–	–	–	–	–	1.0
Acetic acid (Fatty cid)	mg/m^3	10.0	3.0	1.0	1.0	0.5	0.5
Acetone	mg/m^3	5.0	3.0	1.0	1.0	1.0	1.0
Ammonia	mg/m^3	5.0	2.0	2.0	1.0	1.0	1.0
Benzene	mg/m^3	–	–	–	–	0.2	.20
1–Butanol	mg/m^3	–	–	–	–	–	0.8
n–Butye acetate	mg/m^3	–	–	–	–	–	2.0
Carbon monoxide	mg/m^3	10.0	10.0	10.0	10.0	5.0	5.0
Cyclohexane	mg/m^3	–	–	–	–	–	3.0
1,2–Dichloroethane	mg/m^3	–	–	–	–	–	0.5
Ethanol	mg/m^3	–	–	–	–	–	10.0
Ethylucetate	mg/m^3	–	–	–	4.0	4.0	4.0
Ethyleneglycol	mg/m^3	100.0	–	–	–	–	–
Formaldehyde	mg/m^3	–	–	–	–	–	0.05
Heptane	mg/m^3	–	–	–	–	–	10.0
Hydrocarbon (total c)	mg/m^3	100.0	50.0	50.0	50.0	20.0	20.0
Hydrogen	mg/m^3	–	–	–	–	–	2.0%/vol
Hydrogen fluoride	mg/m^3	–	–	–	–	–	0.01
Hydrogen sulfide	mg/m^3	–	–	–	–	–	0.5
Isopropylbenzene	mg/m^3	–	–	–	–	–	0.25
Methane	mg/m^3	0.5%/vol	0.5%/vol	0.5%/vol	0.5%/vol	0.5%/vol	0.5%/vol
Methanol	mg/m^3	–	–	–	–	–	0.2
Methylethylketone	mg/m^3	–	–	–	–	–	0.25
Nitric oxide	mg/m^3	–	–	–	–	–	0.1
Octane	mg/m^3	–	–	–	–	–	10.0
Phenol	mg/m^3	–	–	–	–	–	0.1
Styrene	mg/m^3	–	–	–	–	–	0.25
Toluene	mg/m^3	–	–	–	–	–	8.0
Xylene (m–, o– or p–)	mg/m^3	–	–	–	–	–	5.0

3.2.1.1.1.13.3 Capability: Control airborne particulate contaminants.

The RS shall limit the atmosphere particulate level of the RS atmosphere to 0.15 milligrams per cubic meter for particles 0.5 to 300 microns in size.

AGREED.

3.2.1.1.1.13.4 Capability: Control airborne microbial growth.

The RS shall limit daily average of the airborne microbes in the RS atmosphere to less than 1000 CFU per cubic meter (Current Russian capabilities can limit airborne microbes to 500 CFU per cubic meter for bacteria and to less than 100 CFU per cubic meter for fungi). The RS shall support microbial monitoring in its modules using both U.S. and Russian equipment in accordance with SSP 50065 ICD.

AGREED.

3.2.1.1.1.14 Provide water.

3.2.1.1.1.14.1 Capability: Provide water for crew use.

The RS shall provide water for 6 crewmembers. The RS shall provide an average of 5.5 lbm/person/day (2.5 kg per person per day) potable water, including an average of 1.1 lbm/person/day (0.5 kg/person/day) of water in the food, for food rehydration, consumption, and oral hygiene. The RS shall provide an average of 1.1 lbm/person/day (.5 kg per person per day) of water for hygiene use.

Water provided for food rehydration, consumption, and oral hygiene shall be of potable quality as defined in Table VI–1A. Water provided for hygiene use shall be of hygiene quality as defined in Table VI–1A.

TABLE VI–1A. Joint ISS water quality standards

Note: Where there are TBRs, the U.S. value is given in ( ).				
WATER PARAMETER	UNITS		ISS HYGIENE LIMIT	ISS POTABLE LIMIT
Total Dissolved Solids	mg/l		1000	100, 1000[1]
Color	degree(Pt/Co)		20 (15)	20 (15)
Taste	grade (TTN)		N/A	2 (3)
Odor	grade (TON)		2 (3)	2 (3)
pH	pH units		5.0 – 9.0	5.5 – 9.0
Turbidity	mg/l (NTU)		1.5 (1)	1.5 (1)
Total Gas	1Atm, 20°C		N/A	5%
Ammonia (NH3–N)	mg/l		10	2
Arsenic	mg/l		N/A	0.01
Barium	mg/l		N/A	1
Cadmium	mg/l		N/A	0.005
Calcium	mg/l		N/A	100

TABLE VI–1A. Joint ISS water quality standards – Continued

Note: Where there are TBRs, the U.S. value is given in ( ).				
WATER PARAMETER	UNITS		ISS HYGIENE LIMIT	ISS POTABLE LIMIT
Chlorine–total	mg/l		350	200
Chromium	mg/l		N/A	0.1
Copper	mg/l		N/A	1
Fluorine	mg/l		N/A	1.5
Iodine–total	mg/l		N/A	15
Iodine–residual	mg/l		1.0–4.0	1.0–4.0
Iron	mg/l		N/A	0.3
Lead	mg/l		N/A	0.05
Magnesium	mg/l		N/A	50
Manganese	mg/l		N/A	0.05
Mercury	mg/l		N/A	0.002
Nickel	mg/l		N/A	0.1
Nitrate (NO3–N)	mg/l		N/A	10
Selenium	mg/l		N/A	0.01
Silver	mg/l		0.5–2.0	0.5
Sulfate	mg/l		N/A	250
Zinc	mg/l		N/A	5
Total Hardness (Ca & Mg)	mg/l		N/A	7
Total Bacteria	CFU/100 ml		100000 (1000)	10000 (100)
Coliform Bacteria	CFU/100 ml		<1	<1
Virus	PFU/100 ml		<1	<1
Cyanide	ug/l		N/A	200
Total Phenols	ug/l		N/A	1
Total Organic Carbon	ug/l		TBD (10000)	25000 (500)
Uncharacterized TOC	ug/l		N/A	no limit (100)
COD–Oxygen Consumption	mg/l		250 (no limit)	no limit (100)
Note: (1) The 100 mg/l limit applies to the water before mineralization. Following mineralization this parameter will not exceed 1000 mg/l.				

AGREED.

3.2.1.1.1.15 Provide visual access.

3.2.1.1.1.15.1 Capability: Provide direct visual access.

The RS shall provide external direct visual access from station interior to station exterior to the crew for recreational and scientific purposes.

AGREED.

3.2.1.1.1.15.2 Capability: Provide remote internal visual access.

The RS shall provide remote video access of station pressurized volumes to the RS crew and to the RS ground.

AGREED.

3.2.1.1.1.15.3 Reserved.

3.2.1.1.1.15.4 Capability: Accommodation of PDGF video cable.

The RS shall provide for the accommodation of the US provided FGB PDGF video cable.

AGREED.

3.2.1.1.1.16 Facilitate internal voice communication.

3.2.1.1.1.16.1 Capability: Transmit voice communications.

The RS shall support the transmission of internal voice communications to the USOS and the transmission of internal voice communications between the crew members on the RS on–orbit element.

The RS shall transmit the voice communications to the USOS and to the RS on–orbit element.

The RS shall transmit to the RS on–orbit element loud annunciation (paging) and caution and warning and to the USOS loud annunciation (paging) only.

The characteristics of the transmission of voice communication and loud annunciation (paging) for the USOS shall be in accordance with SSP 42121 ICD, paragraphs 3.2.1.5.1 and 3.2.2.5.1.

AGREED.

3.2.1.1.1.16.2 Capability: Receive voice communication.

The RS shall support the reception of internal voice communications from the USOS and the reception of internal voice communications between the crew members on the RS on–orbit element.

The RS shall receive the voice communications from the USOS and from the RS on–orbit element.

The RS shall receive from the RS on–orbit elements loud annunciation (paging) and caution and warning and shall receive from the USOS a loud annunciation (paging), signal only.

The characteristics of the reception of voice communication and loud annunciation (paging) from the USOS shall be in accordance with SSP 42121 ICD, paragraphs 3.2.1.5.1 and 3.2.2.5.1.

AGREED.

3.2.1.1.1.17 Reserved.

3.2.1.1.1.18 Determine navigation parameters.

3.2.1.1.1.18.1 Capability: Determine state vector and attitude.

a. From activation of the (SM):

The RS shall determine the on–orbit Space Station position, velocity, attitude, and attitude rate knowledge to support attitude control, translation control, and pointing of RS systems.

b. From activation of the USOS Multiplexer/Demultiplexer (MDM) in the Lab Module:

(1) All commands and data transferred between the RS and USOS shall be in accordance with SSP 50097 ICD.

(2) The RS shall provide the USOS with position, velocity, attitude, and attitude rate data at a rate of 1 Hz.

(3) The RS shall provide the USOS with position and velocity translational data with a position accuracy of at least 2953 feet (900 meters) (3 sigma root sum square error), and with a semi–major axis accuracy of 984 feet (300 meters) (3 sigma).

(4) Reserved.

(5) The RS shall provide the USOS with attitude of the Space Station Analysis Coordinate System with respect to the J2000 and LVLH reference frames, with an accuracy of 0.5 degree (3 Sigma for each of three axes).

(6) The RS shall provide the USOS with the inertial attitude rate of the ISS, in the Space Station Analysis Coordinate System reference frame, with an accuracy of 0.01 degrees per second (3 sigma for each of three axes).

(7) The RS shall correct for the angular misalignment between the SM reference frame and the U.S. Space Station Analysis Coordinate System, which are in accordance with SSP 50094, section 12.

c. When the CV is performing translational maneuvers, the CV shall provide attitude rate data to the RGS when the CV is in view of the RGS.

AGREED.

3.2.1.1.1.18.2 Capability: Generate pointing and support data.

The RS shall provide the USOS (in accordance with SSP 50097) the identifier of up to 3 active payloads (or robotics subsystem components), and with positions of their centers of mass in Space Station reference coordinates at a cycle rate of 0.1 Hz.

AGREED.

3.2.1.1.1.19 Maintain attitude – nonpropulsive.

3.2.1.1.1.19.1 Capability: Maintain attitude – nonpropulsive.

a. From activation of the RS nonpropulsive effectors.

(1) The RS shall be able to maintain a Torque Equilibrium Attitude (TEA) using only nonpropulsive effectors.

(2) The RS shall be able to maintain Local Vertical/Local horizontal (LVLH) and inertial attitudes using only nonpropulsive effectors. (This requirement does not size the nonpropulsive effectors and depends on available momentum storage).

(3) The RS shall monitor the nonpropulsive effector momentum state relative to saturation levels and provide notification to the RGS and crew of excessive momentum levels during nonpropulsive attitude control.

(4) The RS shall maintain attitude stability to 5.0 degrees per axis per orbit (total attitude variation in any single orbit interval of time), when controlling to TEA.

(5) The RS shall maintain attitude within +/–3 degrees per axis in the SM reference frame of the commanded attitude when controlling to an LVLH or inertial attitude with nonpropulsive effectors (Propulsive effectors will be used for desaturation).

(6) The RS shall maintain the attitude rates to within +/–0.015 degrees per second per axis with respect to the commanded reference frame when controlling with nonpropulsive effectors.

(7) The RS shall execute attitude control commands originating from the RGS or crew when using nonpropulsive effectors.

(8) The RS shall notify the RGS and crew of failure to converge to the commanded attitude.

(9) The RS shall have the capability to accept constant inertial, LVLH and Analysis Coordinate Frame angular momentum commands from the RGS or crew. The achieved angular momentum variation shall be less than 250 ft–lb–sec/axis peak to peak in any 10 orbit period relative to the command.

(10) The RS shall maintain Space Station attitude within +/– 15 degrees in yaw and roll, +15 to –20 degrees in pitch with respect to (0, 0, 0) yaw, pitch, and roll orientation in the LVLH reference frame to meet thermal constraints and power generation requirements.

(11) When mated with the Orbiter, the RS shall maintain Space Station attitude within +/– 15 degrees in roll and yaw, + 25 to 0 degrees in pitch with respect to (0,0,0) yaw, pitch, and roll orientation in the LVLH reference frame.

b. From activation of the USOS MDMs in the Lab Module:

(1) All commands and data transferred between the RS and USOS shall be in accordance with SSP 50097 ICD.

(2) The RS shall monitor the RS nonpropulsive effector momentum state relative to saturation levels and provide notification to the USOS of excessive momentum levels during nonpropulsive attitude control.

(3) The RS shall execute attitude maneuver abort commands as specified in SSP 50097 ICD originating from the USOS when using nonpropulsive effectors.

(4) The RS shall notify the USOS of failure to converge to the commanded attitude.

AGREED.

3.2.1.1.1.20 Support on–orbit to ground communication.

3.2.1.1.1.20.1 Capability: Support uplinked data.

a. The RS shall receive the data stream (commands, voice, video, and navigation) uplinked from the RS ground.

b. The RS shall distribute uplinked audio, video, and digital data to the interfaces with other on–orbit Space Station segments in accordance with SSP 50097 ICD, and SSP 42121 ICD (paragraphs 3.2.1.5.1, 3.2.2.5.1, 3.2.1.5.3, 3.2.2.5.3) and distribute uplinked data within the RS.

AGREED.

3.2.1.1.1.20.2 Capability: Provide data for downlink.

The RS shall acquire audio, video and digital data (to include telemetry and navigation data) for the downlink from interfaces with other on–orbit Space Station segments in accordance with SSP 50097 ICD, and SSP 42121, ICD (paragraphs 3.2.1.5.1, 3.2.2.5.1, 3.2.1.5.3, 3.2.2.5.3) and from sources within the RS. The RS shall transmit the data streams to the RS ground.

AGREED.

3.2.1.1.1.21 Support internal equipment manipulation and maintenance.

3.2.1.1.1.21.1 Capability: Support internal equipment translation.

The RS shall provide handles or structural or mechanical parts suitable for gripping and tethering equipment that requires moving in accordance with SSP 50094, paragraph 6.4.2.

AGREED.

3.2.1.1.1.21.2 Capability: Support internal equipment removal and replacement.

The RS shall provide crew and equipment restraints capable of being located throughout the RS pressurized habitable volume to support removal and replacement of ORUs and in situ maintenance.

AGREED.

3.2.1.1.1.21.3 Capability: Support internal equipment identification.

The RS shall provide inventory labels on portable equipment and ORUs to maintain an on–orbit inventory to support logistics/resupply operations.

AGREED.

3.2.1.1.1.21.4 Capability: Support internal equipment restraint.

The RS shall provide equipment restraints for every item that is not permanently attached to the RS structure.

AGREED.

3.2.1.1.1.21.5 Capability: Support orbital replaceable unit repair.

The RS shall support limited repair of selected ORUs by providing a work area and tools sufficient to mechanically disassemble, effect repair, re–assemble and checkout. Isolation of failed ORUs shall be provided by ground personnel and/or crew procedure.

AGREED.

3.2.1.1.1.21.6 Capability: Store internal equipment.

The RS shall provide storage volume to store spare internal ORUs, tools, diagnostic equipment, and maintenance supplies.

AGREED.

3.2.1.1.1.22 Support Station to external vehicle proximity operations communication.

3.2.1.1.1.22.1 Capability: Support external input data.

The RS shall receive audio from manned external vehicles, and video and KURS radar data from all Russian external vehicles. The RS shall process and distribute the separated audio, and video.

AGREED.

3.2.1.1.1.22.2 Capability: Provide data for external vehicles.

The RS shall transmit audio to the Soyuz vehicle.

AGREED.

3.2.1.1.1.22.3 Capability: Support external vehicle wave–off.

The RS on–orbit and RS ground shall determine and communicate vehicle wave–off (decision to abort) to the approaching external vehicles.

AGREED.

3.2.1.1.1.23 Reserved.

3.2.1.1.1.24 Capabilities During Pressure Change.

The RS shall be designed to provide the following during the time of depressurization, while depressed, and during repressurization of a RS element:

a. The RS shall retain the structural interface integrity between all the RS on–orbit elements.

b. The RS shall retain the structural interface integrity between the RS and USOS in accordance with SSP 42121, PMA/FGB ICD.

c. The RS shall maintain the transfer of 1553 data between the USOS and RS as specified in SSP 50097, US/RS S/W ICD.

d. To provide the capability to allow crewmembers in the remaining pressurized elements to communicate with each other, the RS shall retain the audio communication between the USOS and RS and between the RS internal elements as specified in 3.2.1.1.1.16.

e. With the assistance of the USOS, the RS shall provide the capabilities as identified in Table VI–2A when the associated RS element that provides the critical function is depressed:

AGREED.

TABLE VI–2A. Distribution of Critical Functions

CF	Critical Function	Russian Segment	United States Orbital Segment (Specific requirements are located in RPO–0218)	Effective ISS Flight
1	Attitude stabilization by damping of angular velocities (non–oriented flight)	The RS shall perform this function, utilizing RS attitude control thrusters, based on USOS sensor data being provided to RS computers. When the ATV is docked to the SM, the RS shall send the commands necessary to support this requirement but, its successful execution is the responsibility of the ATV.	Provides attitude & attitude rates (angular velocities) data, originating from USOS GN&C sensors, to RS computers (Section 3.3.7, RPO–0218)	POST 8A
2	Attitude control	The RS shall perform this function, utilizing RS attitude control thrusters, based on USOS sensor data being provided to RS computers. The RS shall provide the capability to de–saturate USOS CMGs, using RS thrusters. When the ATV is docked to the SM, the RS shall send the commands necessary to support this requirement but, its successful execution is the responsibility of the ATV.	Provides attitude, attitude rates (angular velocities), and state vector (center of mass) data, originating from USOS GN&C sensors, to RS computers and attitude control using CMGs. (Section 3.3.7, RPO–0218)	POST 8A

TABLE VI–2A. Distribution of Critical Functions – Continued

CF	Critical Function	Russian Segment	United States Orbital Segment (Specific requirements are located in RPO–0218)	Effective ISS Flight
3	Reboost	The RS shall perform this function of generating reboost impulses utilizing Progress–M propulsion thrusters. Backup option is to utilize SM propulsion system thrusters if Progress is not docked. When the ATV is docked to the SM, the RS shall send the commands necessary to support this requirement but, its successful execution is the responsibility of the ATV.	Provides attitude, attitude rates (angular velocities), and state vector (center of mass) data, originating from USOS GN&C sensors, to RS computers. (Section 3.3.7, RPO–0218)	POST 8A
4	Communication of Command & Telemetry data with Ground	The RS shall conduct an information exchange between ISS & Ground, via USOS C&T equipment and US Ground support means	Provides for communication between ISS (RS) & Ground, via USOS C&T equipment. Provides data to RS computers and receives data from RS computers utilizing 1553 bus interfaces. (Section 3.3.6, RPO–0218)	POST 8A
5	Electric Power supply	The RS shall maintain the capability to transfer power through the depressurized element between the USOS and RS as specified in RS paragraph 3.2.1.1.1.9.2 and between internal RS elements, in accordance with RS requirements.	Provide capability to supply power up to 5kW to RS. (Section 3.3.1, RPO–0218)	POST 8A
6	Life Support (LS) for three (3) person crew	No LS provided.	Provides LS for 3 person crew throughout repair, up to 180 days (Section 3.3.3., RPO–0218)	POST 16A
7	Thermal control	The RS shall accommodate independently for it's own systems (for station survival mode only)	Accommodates independently for it's own systems (for station survival mode only)	

TABLE VI–2A. Distribution of Critical Functions – Continued

CF	Critical Function	Russian Segment	United States Orbital Segment (Specific requirements are located in RPO–0218)	Effective ISS Flight
8	Soyuz & Progress docking (AR&D) with ISS, and Undocking of Soyuz with ISS (except for the time when the ATV is docked to the SM)	The RS shall provide this capability, assuming CF #1 is assured. When the ATV is docked to the SM, the RS shall send the commands necessary to support this requirement but, its successful execution is the responsibility of the ATV.	Provides attitude, attitude rates (angular velocities), and state vector (center of mass) data, originating from USOS GN&C sensors, to RS computers and attitude control using CMGs. (Paragraph 3.3.7.3.1, RPO–0218)	
9	EVA support	If SM is depressed, this function is no longer provided.	Provides EVA support for the duration of repair utilizing USOS airlock (Section 3.5, RPO–0218)	POST 8A
10	Shuttle docking & undocking with ISS (except for the time when the ATV is docked to the SM)	The RS shall maintain the capability to desaturate USOS CMGs using RS thrusters. When the ATV is docked to the SM, the RS shall send the commands necessary to support this requirement but, its successful execution is the responsibility of the ATV.	Provides Capability assuming CF #2 is assured	

3.2.1.1.2 Mode: reboost.

This mode is used to obtain additional altitude while maintaining a habitable environment and supporting internal and external payload operations. This mode utilizes functionality necessary to support increasing orbit altitude of the space station while executing and controlling attitude propulsively. This mode is primarily used to maintain orbital altitude and would typically follow logistics flights by the orbiter. This mode consists of the capabilities as shown in Table III described more completely below. When the ATV is docked to the SM, the RS shall send the commands necessary to support this requirement but, its successful execution is the responsibility of the ATV.

AGREED.

3.2.1.1.2.1 Execute translation maneuvers.

3.2.1.1.2.1.1 Capability: Execute maneuver guidance.

(When the ATV is docked to the SM, the RS shall send the commands necessary to support this requirement but, its successful execution is the responsibility of the ATV.)

a. From activation of the FGB until SM activation:

(1) The RS shall control the on–orbit Space Station invariant semi–major axis to within 2000 feet (610 meters) (3 sigma) of the targeted value at the end of the reboost maneuver.

(2) The RS shall be capable of controlling the on–orbit Space Station orbit by executing open loop maneuver sequences provided by RGS.

(3) The FGB shall automatically dock with the SM.

b. From activation of the SM:

(1) The RS shall control the on–orbit Space Station invariant semi–major axis to within 1000 feet (305 meters) (3 sigma) of the targeted value at the end of the reboost maneuver.

(2) The RS shall be capable of executing single burn maneuvers commanded by the crew.

(3) The RS shall be capable of controlling the on–orbit Space Station orbit by executing open loop maneuver sequences provided by the crew or RGS.

c. From activation of the USOS MDMs in the USOS Lab Module:

(1) All commands and data transferred between the RS and USOS shall be in accordance with SSP 50097 ICD.

(2) The RS shall be capable of controlling the on–orbit Space Station orbit by executing open loop maneuver sequences orginating from the RGS provided to the RS via the USOS and USGS.

AGREED.

3.2.1.1.2.1.2 Capability: Execute translational thrust.

(When the ATV is docked to the SM, the RS shall send the commands necessary to support this requirement but, its successful execution is the responsibility of the ATV.)

a. All Stages.

(1) The RS shall terminate a maneuver execution on command originating from RGS within 1.0 second of receipt of the command, excluding the time for thrust tail off.

(2) The RS shall control translation maneuver initiation and termination times to within 1.0 second of the targeted values, excluding the time for thrust build up or thrust tail off.

(3) The RS shall determine total propellant levels and report them to the RGS.

(4) The RS shall have the capability to execute translation maneuver commands originating from the RGS.

(5) The RS shall be able to inhibit thrusters from firing when in contact with the Orbiter.

(6) The RS shall be designed to send propulsive effector data to the RGS.

(7) The RS propulsion systems shall have performance as shown in Table VI–A and VI–B.

TABLE VI–A. Propulsion system performance – SM – SPP Progress M

Engine Design Specification	Units	SM			SPP	Progress M	
Thrust	kgf	300 +/–30	13.3	13.3	10+/–1	300 +/–30	13.3 +/–3
Quantity		2	8	24	12	1	28
Steady State Specific Impulse	sec	300 +5/–7	>/=251	283 +2/–3	>/=294	300 +5/–7	250 +/–5
Mixture Ratio		1.85	1.85	1.85	1.85	1.85	1.85
Maximum Number of Firings (Life)		250	450,000	450,000	450,000	30	40,000
Total On–Time Limit (Life)	sec	25,000	45,000	45,000	50,000	880	5000
Total Propellant Throughtput (Life)	kg	25,000	2500	2500	1500	880	350
Engine On–Times	sec	10 – 400	0.03 – 600	.03 – 600	0.03 – 2500	0.5 – 300	0.03 – 600
Minimum Engine Off–Times	sec	10	0.03	.03	0.03	10	0.03
Gimble Angle Range	Deg	+/–5 in 2 axes				+/–5 in 2 axes	

TABLE VI–B. Propulsion system performance – Progress M1–FGB

Engine Design Specification	Units	Progress M1		FGB		
Thrust	kgf	300 +/–30	13.3 +/–3	417 +/–16	40 +/–2	1.3 +/–.06
Quantity		1	28	2	24	16
Steady State Specific Impulse	sec	300 +5/–7	285 +5/–20	298 +/–3	252 +/–12	274 +/–10
Mixture Ratio		1.85	1.85	1.85	1.85	1.85
Maximum Number of Firings (Life)		30	40,000	100	33,000	450,000
Total On–Time Limit (Life)	sec	880	20,000	2600	10,000	180,000
Total Propellant Throughtput (Life)	kg	880	up to 800	3640	1600	300
Engine On–Times	sec	0.5 – 300	0.03 – 2000	1.5 – 400	0.1 – 3000	0.03 – 10,000
Minimum Engine Off–Times	sec	10	0.03	60	0.05	0.03
Gimble Angle Range	Deg	+/–5 in 2 axes				

b. From activation of the FGB until activation of SM:

(1) The RS shall be capable of executing a maneuver of up to 5 feet per second within 90 minutes after receiving the RGS command data stream (flight assignment).

(2) The RS propulsive effectors shall have a service life sufficient to complete the reboosts and attitude control maneuvers until SM activation.

(3) After docking with the SM, the FGB engines shall not be used.

c. When the SM is performing translational maneuvers:

(1) The RS shall be capable of executing a translational maneuver of up to 5 feet per second within ninety minutes of being commanded to execute the maneuver, within the functional responsibilities for the SM as shown in Figures 4–A, 4–B, 4–C, and 4–D.

RS TRANSLATIONAL MANEUVER CAPABILITIES

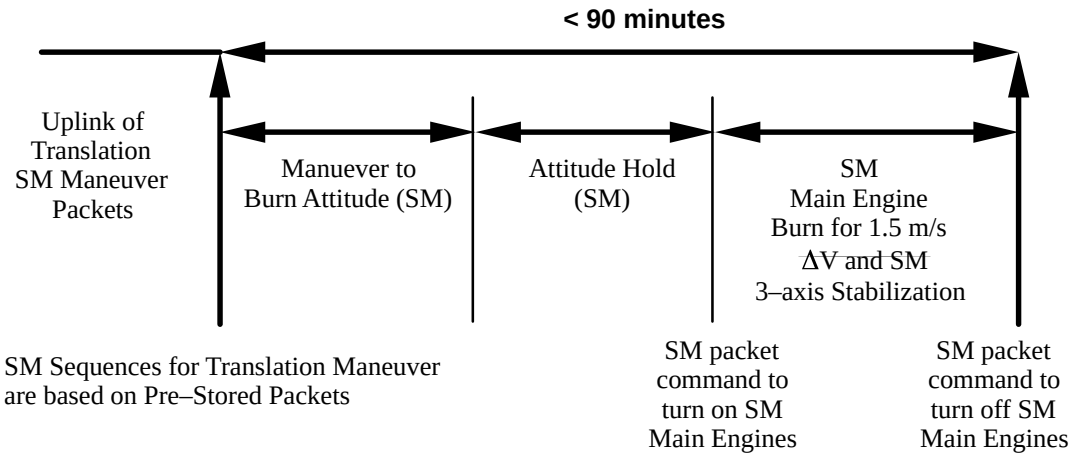

FIGURE 4–A. SM Attitude Turn, Attitude Hold, Translation, and Stabilization when no vehicles are on the SM Aft End

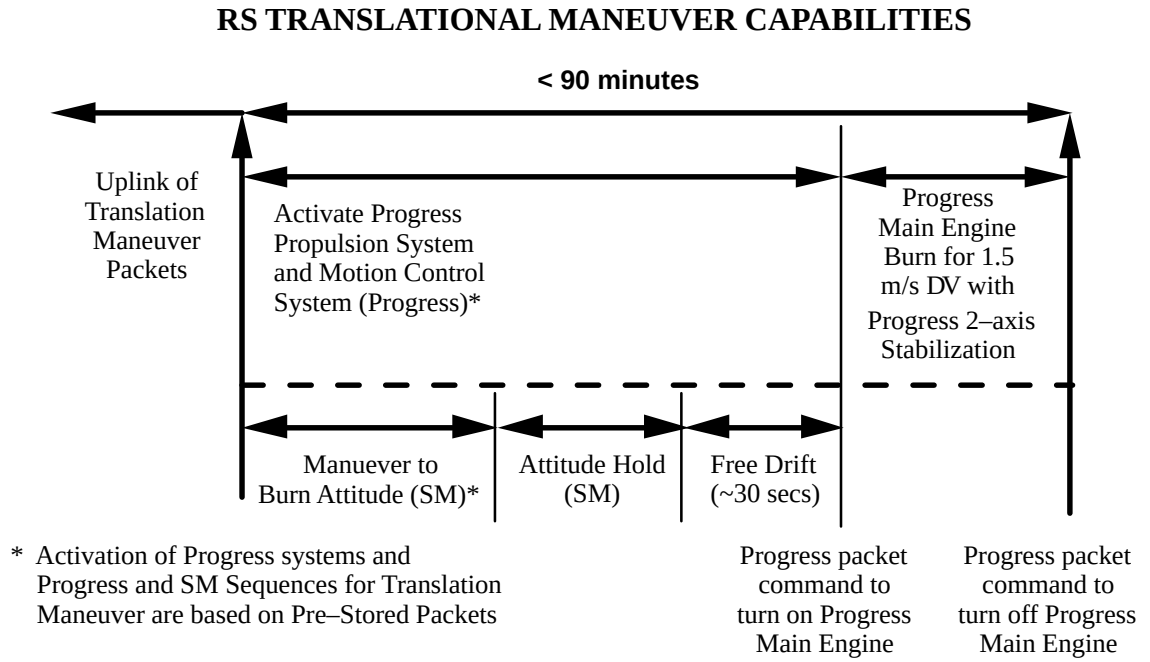

FIGURE 4–B. Progress Translation and Stabilization, SM Attitude Turn and Attitude Hold with Progress at Aft End of SM – No Matching Unit between SM and Progress

Operaational Constraint on this Capability is that the Progress main propellant tank must retain sufficient quantities of propellant to perform the maneuver over and above the quantity required for the Progress deorbit burn.

RS TRANSLATIONAL MANEUVER CAPABILITIES

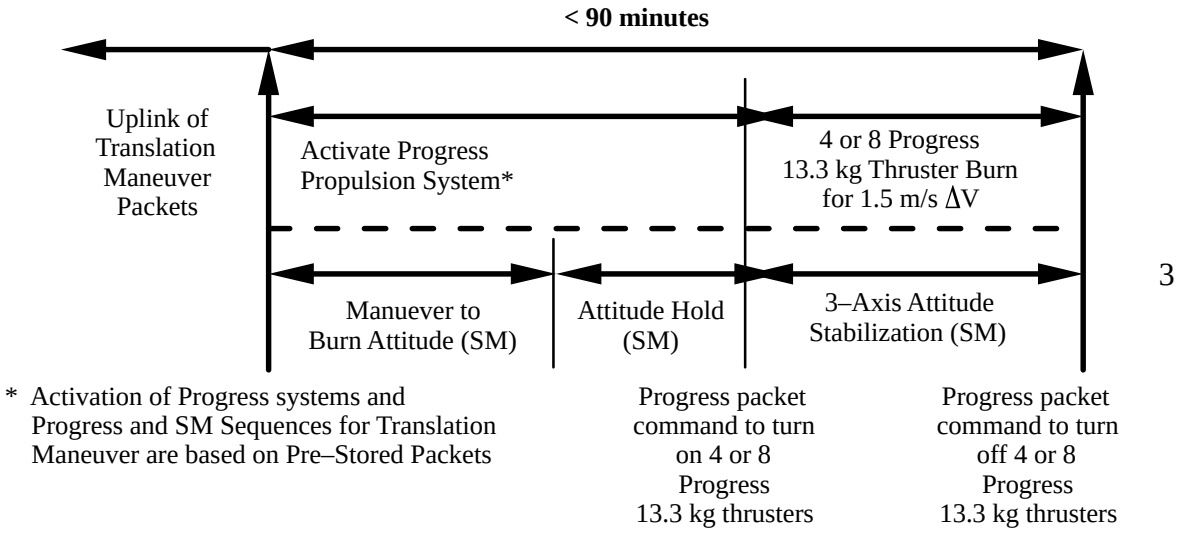

FIGURE 4–C. Progress Translation and SM Attitude Turn, Attitude Hold, and Stabilization with Progress at SM Aft End or FGB Nadir (only for certain configurations) – No Matching Unit between SM and Progress

RS TRANSLATIONAL MANEUVER CAPABILITIES

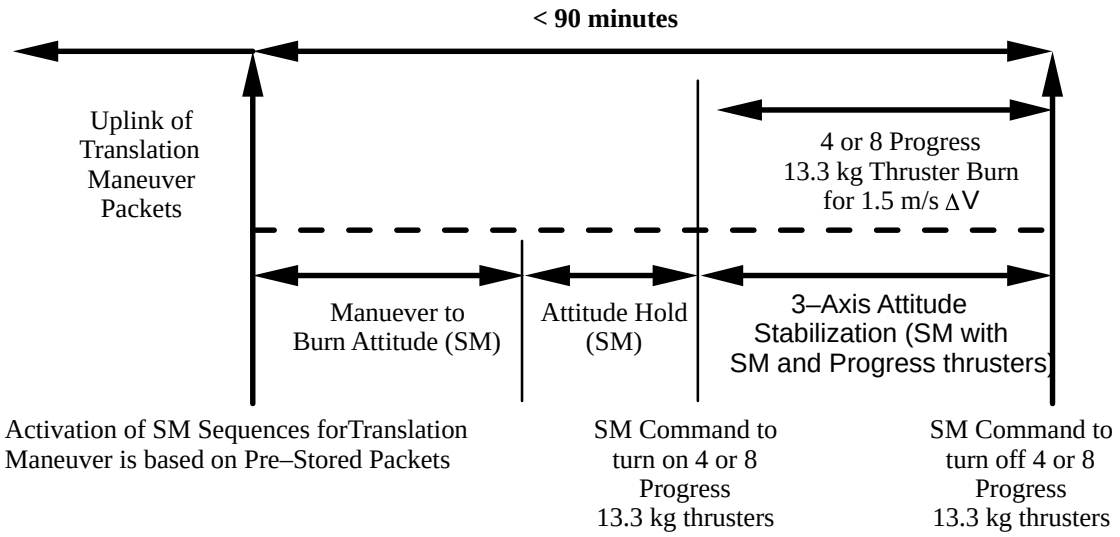

FIGURE 4–D. SM Attitude Turn, Attitude Hold, and Stabilization and Commanding of Progress Thrusters, with Progress on SM Aft End and Matching Unit between SM and Progress

(2) The RS shall terminate a maneuver execution on command originating from RGS or crew within 1.0 second of receipt of the command.

(3) The RS shall provide propellant for orbital thrust increments to compensate for orbital decay due to atmospheric drag and a reserve to perform a reboost to an altitude that will allow 360 days orbital decay to an altitude of 150 nautical miles (278 km) under nominal conditions. The reserve propellant is stored in the FGB and partially, in the SM.

(4) Reserved.

(5) The RS shall have the capability to determine propellant levels in the RS tanks and report them to the crew.

(6) The RS shall have the capability to control the ISS attitude during translational maneuvers.

(7) The RS shall have the capability to execute translational maneuver commands originating from the crew.

(8) The RS propulsive effectors shall have a design life sufficient to complete the reboost and attitude control maneuvers required over the life of the RS.

(9) The RS shall send propulsive effector data to the crew.

(10) The RS shall be able to inhibit and enable individual thrusters by direct command originating from the RGS or crew.

(11) The RS shall have the capability of performing translational maneuvers using CV thrusters fed directly with propellants from the SM or FGB propellant tanks.

d. From activation of the USOS MDMs in the USOS Lab Module:

(1) All commands and data transferred between the RS and USOS shall be in accordance with SSP 50097 ICD.

(2) The RS shall terminate a translational maneuver execution in response to an abort command originating from the USOS within 1.0 second of receipt of the command.

(3) The RS shall determine total propellant levels and report them to the USOS.

(4) The RS shall have the capability to execute translational maneuver abort commands originating from the USOS.

(5) The RS shall send propulsive effector status data to the USOS.

(6) The RS shall be able to inhibit and enable individual thrusters by direct command originating from the USOS.

e. When the CV is performing translational maneuvers.

(1) Reserved.

(2) Reserved.

(3) Reserved.

(4) Reserved.

(5) Reserved.

(6) The RS shall be capable of executing a translational maneuver of up to 5 feet per second within ninety minutes of being commanded to execute the maneuver, within the functional responsibilities for the Cargo Vehicle as shown in Figures 4–B, 4–C, and 4–D.

(7) The RS shall have the capability of performing translational maneuvers using CV thrusters fed directly with propellants from the SM, FGB or propellant tanks.

(8) When a crew installed matching unit provides connection between the CV small thrusters and the SM terminal computer:

(a) The CV shall respond to thruster on/off commands from the RS.

(b) The CV shall send propulsive effector data (status of thruster operations – on/off) to the RS.

AGREED.

3.2.1.1.2.2 Capability: Control attitude – propulsive.

(When the ATV is docked to the SM, the RS shall send the commands necessary to support this requirement but, its successful execution is the responsibility of the ATV.)

AGREED.

3.2.1.1.2.2.1 Rotational control.

(When the ATV is docked to the SM, the RS shall send the commands necessary to support this requirement but, its successful execution is the responsibility of the ATV.)

a. For all stages:

(1) The RS shall have the capability to control to LVLH, and inertial attitudes using propulsive effectors.

(2) Reserved.

(3) The RS shall execute attitude control commands originating from the RGS when using propulsive effectors.

(4) The RS shall provide attitude control capability during all phases of Orbiter and other external vehicles approach and departure operations, and the capability to return to the desired attitude upon completion of Orbiter and other external vehicles mating or demating operations.

(5) The RS shall be designed to send propulsion system data to the RGS.

(6) The RS Motion Control System's contribution to the peak to peak angular motion (dynamic error range) shall be within 4.0 degrees peak to peak per axis after a failed Orbiter docking and back away.

(7) The RS MCS shall maintain angular rate of the RS body axes relative to the true LVLH coordinates to within 0.1 degrees per second per axis after a failed Orbiter docking and back away.

b. From activation of the FGB until activation of the SM:
(1) The RS shall provide dynamic stability to perform berthing with the Orbiter and other external vehicles at an altitude of 278 km (150 n.mi.) or above.

(2) The RS shall control attitude rates to within +/– 1.50 degrees per second per axis when performing translation maneuvers.

(3) The RS shall send attitude control data and attitude determination data to the RGS.

(4) The RS shall be able to discontinue attitude control after grappling with the Orbiter, independent of the USGS and RGS.

(5) The RS shall maintain its attitude and attitude rate in the LVLH frame with an accuracy of +/– 1.5 degrees and +/– 0.1 degree per second per LVLH axis.

(6) The RS shall be able to maintain attitude and attitude rates of the Space Station to an accuracy of +/– 10 degrees per axis and +/– 0.10 degrees per second per axis to support grappling with the Orbiter SRMS.

(7) After docking with the SM, the FGB engines shall not be used.

c. From activation of the SM:

(1) The RS shall provide dynamic stability to perform docking and undocking with the Orbiter and other external vehicles at an altitude of 278 km (150 n.mi.) or above.

(2) The RS shall control attitude rates to within +/– 0.20 degrees per second per axis when performing translation maneuvers.

(3) The RS shall control transient attitude rates in three axes during translational maneuvers.

(4) The RS shall limit the time period of transient rates during translational maneuvers.

(5) The RS shall have the capability to control to TEA attitudes using propulsive effectors.

(6) Reserved.

(7) The RS shall monitor convergence of the actual attitude relative to the commanded attitude and provide notification to the crew of failure to converge.

(8) The RS shall execute attitude control commands originating from the crew when using propulsive effectors.

(9) The RS shall monitor propellant usage relative to the predicted propellant usage and provide notification to the RGS and crew of excessive propellant usage during propulsive attitude control.

(10) The RS shall support docking operations with the Orbiter for the time period of two orbital revolutions.

(11) The RS Motion Control System’s (MCS’s) contribution to the peak to peak angular motion (dynamic error range) shall be within +/– 0.8 degrees per axis in the SM reference frame during Orbiter approach and station–keeping.

(12) The RS MCS shall maintain the attitude knowledge of the SM reference frame relative to the true LVLH coordinates to within 0.5 degrees per axis during Orbiter operations.

(13) The RS MCS shall maintain angular rate of the SM body axes relative to the true LVLH coordinates to within 0.04 degrees per second per axis during Orbiter docking operations approach and station–keeping.

(14) The RS MCS shall maintain attitude within +/– 3.0 degrees per axis in the SM reference frame when controlling to a LVLH or inertial attitude with propulsive effectors, or with nonpropulsive effectors assisted by propulsive effectors.

(15) The RS shall maintain attitude within +/– 10.0 degrees of the TEA attitude in the SM reference frame.

(16) The RS shall control attitude rates to within +/– 0.03 degrees per second for the X–axis and +/– 0.015 deg/sec for the Y– and Z– axes with respect to the commanded attitude when not performing translational or rotational maneuvers.

(17) The RS shall provide attitude control of the fully mated Space Station/Orbiter/other external vehicles configurations.

(18) The RS shall be able to inhibit and enable individual thrusters by direct command originating from RGS or crew.

(19) The RS shall control the attitude and attitude rates while executing maneuvers to alter the on–orbit Space Station attitude.

(20) The RS shall be capable of an angular maneuver rate of at least 0.10 degrees per second per axis.

(21) The RS shall maintain Space Station attitude within +/– 15 degrees in yaw and roll, +15 to –20 degrees in pitch with respect to (0, 0, 0) yaw, pitch, and roll orientation in the LVLH reference frame to meet thermal constraints and power generation requirements and to minimize the use of propellant.

(22) The RS shall provide the capability to hold the current attitude of the SM reference frame with respect to LVLH at the instant that this command is received.

(23) The RS shall provide a mate/demate indicator to the USOS when an external vehicle mates/demates with the RS.

(24) The RS Motion Control System’s contribution to the peak to peak angular motion (dynamic error range) shall be within 4.0 degrees peak to peak per axis in the SM reference frame after Orbiter departure (after activation of the MCS attitude control).

(25) The RS MCS shall maintain angular rate of the SM body axes relative to the true LVLH coordinates to within 0.1 degrees per second per axis after Orbiter departure (after activation of the MCS attitude control).

(26) The RS shall monitor convergence of the actual attitude relative to the commanded attitude and provide notification to the RGS of failure to converge.

(27) The RS shall provide three–axis attitude control when the CV is performing translational maneuvers with the CV small thrusters.

(28) When mated with the Orbiter, the RS shall maintain Space Station attitude within +/– 15 degrees in roll and yaw, + 25 to 0 degrees in pitch with respect to (0,0,0) yaw, pitch, and roll orientation in the LVLH reference frame.

d. From activation of the RS nonpropulsive effectors:

The RS shall control attitude rates to within +/– 0.015 degrees per second per axis with respect to the commanded attitude when not performing translational or rotational maneuvers.

e. From activation of the USOS MDMs in the USOS Lab Module:

(1) All commands and data transferred between the RS and USOS shall be in accordance with SSP 50097 ICD.

(2) The RS shall monitor convergence of the actual attitude relative to the commanded attitude and provide notification to the USOS of failure to converge.

(3) The RS shall execute attitude maneuver abort control commands originating from the USOS when using propulsive effectors.

(4) The RS shall monitor propellant usage relative to the predicted propellant usage and provide notification to USOS of excessive propellant usage during propulsive attitude control.

(5) The RS shall be able to inhibit and enable individual thrusters by direct command originating from the USOS.

(6) The RS shall send propulsive effector data to the USOS.

f. From activation of the Structural Dynamics Measurement System (SDMS) on S0:

The RS shall execute time sequences of thruster firings to support structural testing.

g. When the CV is performing translation maneuvers:

(1) The RS shall control steady–state rates in two axes.

(2) The RS shall control transient attitude rates in two axes.

(3) The RS shall limit the time period of transient rates in two axes.

(4) The RS shall have the capability to control inertial attitude about two axes.

(5). With a crew installed matching unit providing connection between the SM terminal computer and the CV small thrusters:

(a) The CV shall respond to thruster on/off commands from the RS.

(b) The CV shall send propulsive effector data (status of thruster operations – on/off) to the RS.

AGREED.

3.2.1.1.2.2.2 Provide desaturation torque.

(When the ATV is docked to the SM, the RS shall send the commands necessary to support this requirement but, its successful execution is the responsibility of the ATV.)

a. From activation of the USOS MDMs in the USOS Lab Module and activation of the U.S. non propulsive effectors:

(1) All commands and data transferred between the RS and USOS shall be in accordance with SSP 50097 ICD.

(2) The RS shall provide a torque using propulsive effectors when commanded by the USOS and crew for U.S. nonpropulsive effector desaturation.

(3) The RS shall provide an indication of initiation of propulsive effector firings and status of propulsive effectors during desaturation activities to the USOS and crew.

(4) The RS shall have the capability to provide a change in angular momentum within 20% magnitude and within +/– 15 degrees angle when commanded by the USOS.

(5) The RS shall have the capability to provide a torque with a specified thruster pulse pattern when desaturation is commanded for the U.S. nonpropulsive effectors by the USOS and crew.

b. From activation of the RS nonpropulsive effectors:

(1) The RS shall provide a torque using propulsive effectors when commanded by the RGS or crew for RS nonpropulsive effector desaturation.

(2) The RS shall have the capability to provide propulsive effector status during desaturation activities to the RGS and crew.

(3) The RS shall have the capability to provide a torque with a specified thruster pulse pattern for use by its propulsive effectors when both a desaturation command for the RS nonpropulsive effectors is issued and the SSRMS is active.

c. From activation of the SM.

The RS shall have the capability to store a thruster pulse pattern provided by the USOS, RGS and crew for use by the RS to provide desaturation.

AGREED.

3.2.1.1.3 Reserved.

3.2.1.1.4 Mode: microgravity.

a. This mode consists of functions required for microgravity research by user payloads in a habitable environment.

b. This mode does not include the effects of crew activity, but does include the effects of crew equipment, such as the operation of exercise devices and latched or hinged enclosures. Crew effects will be mitigated to the extent possible.

c. This mode consists of the capabilities as shown in Table III, and the following unique capability.

AGREED.

3.2.1.1.4.1 Support microgravity experiments.

3.2.1.1.4.1.1 Capability: Limit accelerations.

Beginning with assembly complete, the RS shall provide the following microgravity acceleration/performance at the locations specified below for a minimum of 180 days in continuous time intervals of at least 30 days.

a. The RS shall support the system level quasi–steady requirements of microgravity acceleration magnitude less than or equal to 1 micro–g and component perpendicular to the orbital average acceleration vector less than or equal to 0.2 micro–g for at least 50% of the internal payload locations in the U.S., ESA, and NASDA modules as defined in the RS Microgravity Control Plan (RPO 0754), excluding the disturbances given in the following paragraphs b, c, d, and e.

b. The RS shall limit the quasi–steady (<0.01 Hz) acceleration magnitude from individual RS disturbance sources to less than or equal to 0.02 micro–g at the centers of at least 50% of the internal payload locations as defined in the RS Microgravity Control Plan (RPO 0754), excluding aerodynamic and gravitational forces.

c. The RS shall limit attenuated vibratory accelerations (0.01 </=f</=10.0 Hz) from RS disturbance sources to the levels specified in Figure 5–A at the structural mounting interfaces of at least 50% of the internal payload locations as defined in the RS Microgravity Control Plan (RPO 0754). The attenuation levels specified in Figure 5–B shall be applied to the unattenuated accelerations to determine the attenuated vibratory accelerations.

d. The RS shall limit the translational and rotational vibratory accelerations (10.0 <f</=300.0 Hz) from RS disturbance sources to a combination of 100% using 25%, 50%, and 75% translational and rotational levels specified in Figures 5–C and 5–D respectively at the RS to USOS structural interface.

e. The RS shall limit attenuated transient accelerations from individual RS transient disturbance sources to less than or equal to 1000 micro–g per axis, and when integrated over any 10 second interval to less than or equal to 10 micro–g seconds per axis, at the structural mounting interfaces of at least 50% of the internal payload locations as defined in the RS Microgravity Control Plan (RPO 0754). The attenuation levels specified in Figure 5–B shall be applied to the unattenuated accelerations to determine the attenuated transient accelerations.

AGREED.

3.2.1.1.4.1.2 Limit angular momentum disturbance.

In micro gravity mode, the RS contribution to the ISS angular momentum during any continuous 10 minute period shall be less than 907 ft–lbf–sec (1230 N–m–sec) angular momentum with respect to the origin as specified in SSP 50094, Section 12, Space Station Analysis Coordinate System, due to RS onboard disturbances including vent impingement on ISS structure when calculated with control loops open.

AGREED.

Deleted.

FIGURE 5. Allowable accelerations @ the TBD interface

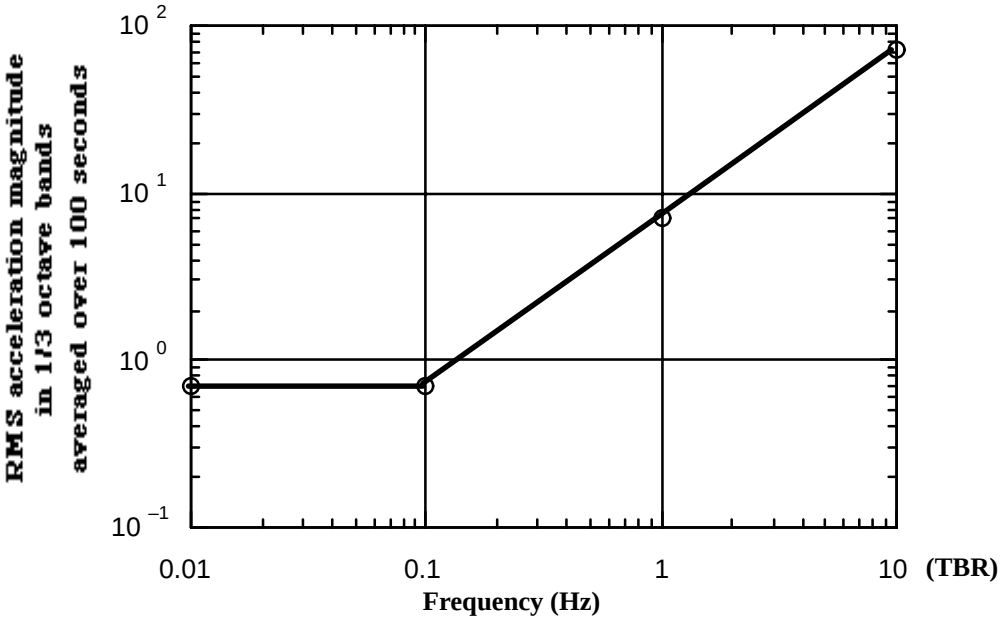

for 0.01 </= f </= 0.10 Hz a </= 0.707 micro–g
for 0.1 <f</=10.0 Hz a </= 7.07 micro–g
(where ”f” = frequency and ”a” = acceleration)

FIGURE 5–A. Allowable accelerations @ the structural mounting interface to the internal payload locations (Beginning with assembly complete)

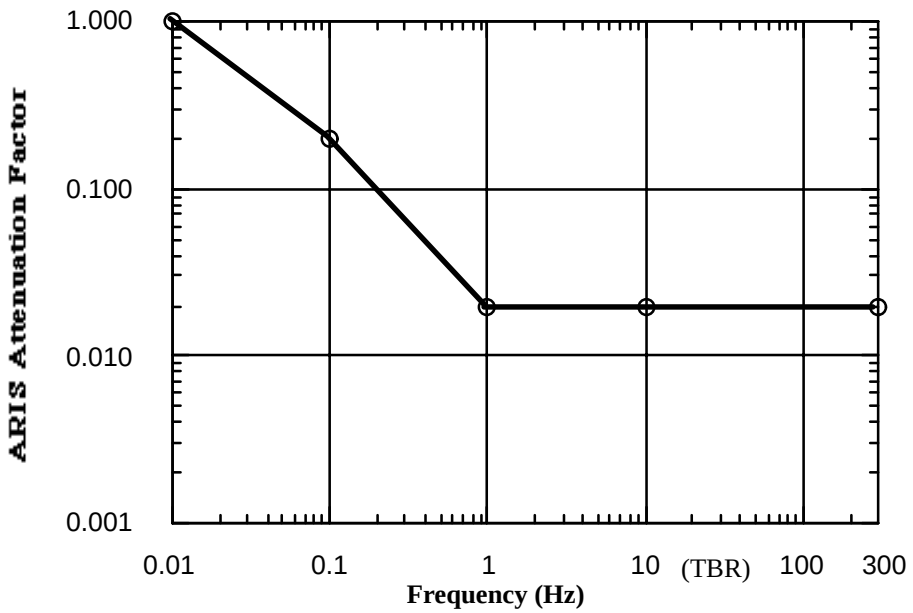

for 0.01 </= f </= 0.10 Hz log (af) = –0.69897 log(f) – 1.39794
for 0.10 f </= 1.00 Hz log (af) = –log(f) – 1.69897
for 0.10 < f < 10.0 Hz af – 0.020
(where ”f” = frequency and ”af” = attenuation factor)

FIGURE 5–B. Multiplicative attenuation factors for induced accelerations at the structural mounting interfaces to the internal payload locations

3.2.1.1.5 Mode: Survival.

This mode is initiated upon command or when a warning of imminent threat (attitude rate/acceleration too high, available power too low, battery charge condition inadequate) is not acknowledged by the on–orbit crew, orbiter crew, or ground. During this mode, the station autonomously attempts to correct the threatening condition and provides keep alive utilities to the Station’s crew/core–systems but precludes support or commanding of external or internal payloads. This mode shall consist of the capabilities as shown in Table III.

AGREED.

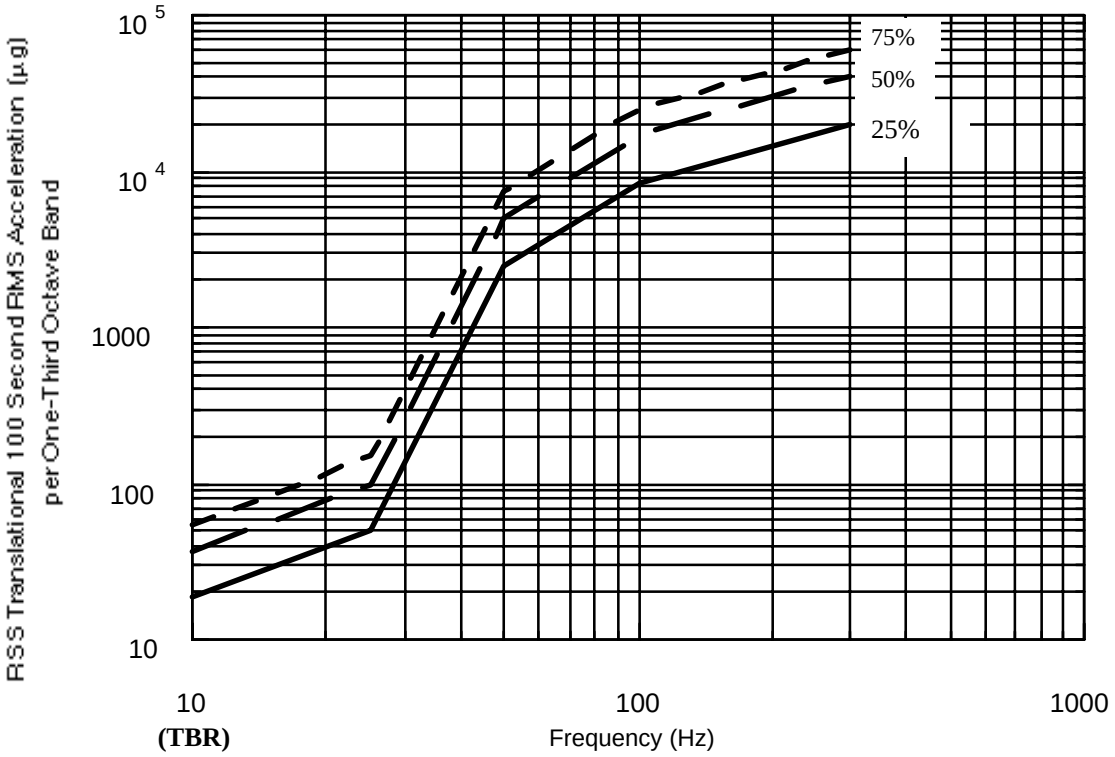

FIGURE 5–C. Allowable translation acceleration magnitude at the RS to USOS structural interface for translational contributions of 25, 50 and 75% of the total allowable (Beginning with assembly complete)

3.2.1.1.6 Mode: Proximity Operations.

(When the ATV is docked to the SM, the RS shall send the commands necessary to support this requirement but, its successful execution is the responsibility of the ATV.)

This mode provides the capabilities related to supporting safe operations with other vehicles (e.g. orbiter docking or berthing) while maintaining a habitable environment and supporting internal and external payload operations. The vehicle is actively determining and controlling its attitude non–propulsively. This mode consists of the capabilities as shown in Table III.

AGREED.

3.2.1.1.6.1 Capability: Provide automated collision avoidance maneuvers.

The Russian external vehicles shall have automated collision avoidance maneuvers to provide short and long term safe trajectories if an abort is initiated by onboard software, vehicle crew, ISS crew, or RGS.

AGREED.

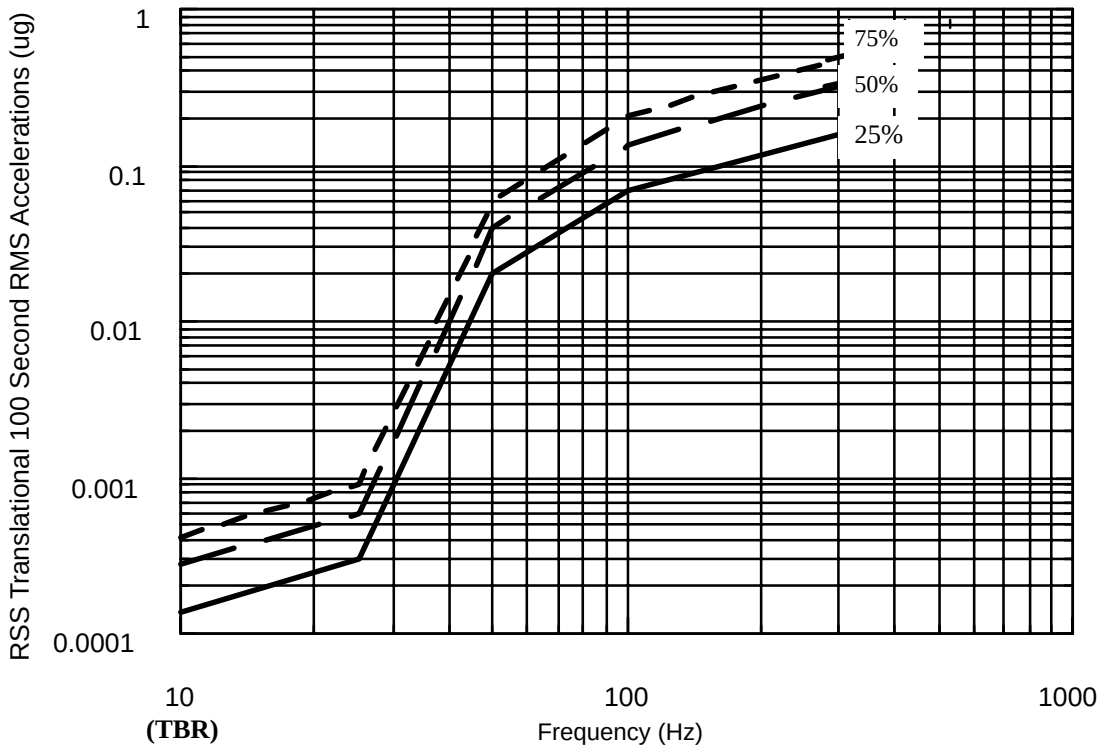

FIGURE 5–D. Allowable rotational acceleration magnitude at the RS to USOS structural interface for rotational contributions of 25, 50, and 75% of the total allowable (Beginning with assembly complete)

3.2.1.1.6.2 Reserved.

3.2.1.1.6.3 Capability: Provide docking status.

The RS docking mechanisms shall provide an indication of the docking status to the ISS crew and the Russian ground segment during Russian vehicle docking operations.

AGREED.

3.2.1.1.6.4 Capability: Support external vehicle to ISS relative navigation.

The RS shall accommodate cooperative navigation systems for external vehicles to perform rendezvous with the ISS.

AGREED.

3.2.1.1.6.5 Capability: External vehicle monitoring during rendezvous approach.

The RS shall determine from station data, external vehicle status data, and visual information when it is no longer safe for a Russian incoming vehicle to dock with the ISS.

AGREED.

3.2.1.1.6.6 Capability: Mission planning – rendezvous and docking.

(When the ATV is docked to the SM, the RS shall send the commands necessary to support this requirement but, its successful execution is the responsibility of the ATV.)

The on–orbit software and RGS mission planning shall produce RS external vehicle rendezvous and docking reference profiles that as a minimum provide the following safety features:

a. Unmanned vehicle final rendezvous trajectories to ISS altitude shall target a point out –of–plane such that if no further maneuvers were conducted, the approaching vehicle would pass safely by the ISS based on 3 sigma trajectory dispersions.

b. Rendezvous and proximity operations trajectory shall remain outside of a 400 m ”keep out zone” until start of the fly–around phase. (Excludes fly–around for relocation of vehicles).

AGREED.

3.2.1.1.6.7 Capability: External vehicle video transmission.

All Russian external vehicles shall provide for transmission of video to the RS (when within communications range) and the Russian Ground Segment (when within view) during the vehicle approach and docking.

AGREED.

3.2.1.1.7 Mode: External Operations.

This mode utilizes functionality related to supporting station based external operations while maintaining a habitable environment and supporting internal and external payload operations. These activities are typically driven by the following operational needs: assembly, maintenance or inspection. The vehicle is actively determining and controlling its attitude non–propulsively. This mode consists of the capabilities as shown in Table III and the following unique capabilities:

AGREED.

3.2.1.1.7.1 Support EVA Operations.

3.2.1.1.7.1.1 Capability: Support voice and data communications.

The RS shall support EVA voice and data communication through hardline and radio frequency before, during, and after manned external operations for up to two external Russian EVA crewmembers simultaneously. The RS on–orbit elements shall support the relay of the Russian EVA voice to the USOS in a duplex mode for up to two Russian EVA crewmembers. The RS on–orbit elements shall support the relay of the US EVA voice from the USOS to the Russian EVA crewmembers in a duplex mode.

AGREED.

3.2.1.1.7.1.2 Communication with U.S. Airlock Orlan suits.

The RS shall support simultaneous transmission and reception of both voice and communications from the SM to no less than 2 Orlan–M suited crewmembers prior to their egress from the USOS Airlock when the U.S. Airlock hatches are either open or closed in accordance with SSP 42121, appendix 1.

AGREED.

3.2.1.1.7.1.3 Reserved.

3.2.1.1.7.1.4 Capability: Support station ingress.

The RS (Docking Compartment and Service Module) shall support the controlled, tethered entry by crewmembers in Russian EVA pressurized suits into the SM or DC after egress from the SM or DC.

The RS (Docking Compartment and Service Module) shall support the repressurization of the crew from vacuum to Space Station atmosphere at a nominal repressurization rate of 5 mm Hg per second. The maximum emergency repressurization rate shall not exceed 10 mm Hg per second.

AGREED.

3.2.1.1.7.1.5 Capability: Illuminate external worksites and translation paths.

The RS shall supply portable external illumination to both translation paths and worksites.

AGREED.

3.2.1.1.7.1.6 Capability: Track external crew.

The RS shall track the location of the external crew members.

AGREED.

3.2.1.1.7.1.7 Capability: Self rescue of EVA Crew.

The RS shall provide the capability for self rescue of an EVA crewmember who has become inadvertently separated from the ISS.

AGREED.

3.2.1.1.7.2 Accommodate Mobile Servicing System.

a. The RS shall accommodate a Power Data Grapple Fixture worksite and robotic berthing point to provide the attachment point for the Space Station Remote Manipulator System (SSRMS) to assist in the assembly of the SPP on–orbit. The RS shall provide the following interfaces to the PDGF as specified in SSP 50227, section C:

1. EVA and SSRMS access envelopes in accordance with SSP 50227, section C3.2.1.1.1.

2. PDGF stand location in accordance with SSP 50227, section C3.2.1.2.

3. Structural/Mechanical interfaces in accordance with SSP 50227, section C3.2.1.3.

4. Electrical interfaces in accordance with SSP 50227, section C3.2.1.4.

5. Data interfaces in accordance with SSP 50227, section C3.2.1.5.

6. Thermal interfaces in accordance with SSP 50227, section C3.2.1.6.

7. Environmental interfaces in accordance with SSP 50227, section C3.2.1.7.

8. EVA interfaces in accordance with SSP 50227, section C3.2.1.8.

b. The RS shall accommodate a Video Signal Converter in accordance with SSP 50227 to provide for the following:

1. Assembly envelopes in accordance with SSP 50227, section D3.2.1.1.

2. Structural/Mechanical interfaces in accordance with SSP 50227, section D3.2.1.2.

3. Thermal interfaces in accordance with SSP 50227, section D3.2.1.5.

4. Environmental interfaces in accordance with SSP 50227, section D3.2.1.6.

5. EVA interfaces in accordance with SSP 50227, section D3.2.1.7.

AGREED.

3.2.1.1.8 Mode: Crew delivery and return.

This mode provides crew delivery and return from the ISS including unplanned crew return. This mode will not require modifications to the Soyuz vehicle to accommodate the unplanned crew return. This mode consists of the capabilities shown in Table III and the following unique capabilities.

AGREED.

3.2.1.1.8.1 Support scheduled crew delivery and return.

3.2.1.1.8.1.1 Capability: Scheduled crew delivery and return.

The RS shall provide scheduled delivery and return of crew members. This capability shall support the rendezvous docking/undocking, and separation of the Soyuz vehicle from the ISS.

AGREED.

3.2.1.1.8.2 Support unplanned crew return.

3.2.1.1.8.2.1 Capability: Support unplanned crew return.

The RS shall provide the capability for unplanned return of the crew. The Soyuz operations for the unplanned crew return will utilize procedures developed for the scheduled crew return.

AGREED.

3.2.1.2 External and proximity operations.

3.2.1.2.1 Mode: Proximity Operations.

This mode provides the capabilities related to supporting safe operations with other vehicles (e.g. orbiter docking or berthing) while maintaining an environment which is safe for the equipment and untended payloads supporting internal and external payload operations. The vehicle is actively determining and controlling its attitude non–propulsively. This mode consists of the capabilities as shown in Table III.

AGREED.

3.2.1.2.2 Mode: External operations.

This mode utilizes functionality related to supporting external vehicle (e.g., shuttle) based external operations while maintaining an environment which is safe for the equipment and supporting untended internal and external payload operations. These activities are typically driven by the following operational needs: assembly, maintenance or inspection. The vehicle is actively determining and controlling its attitude non–propulsively. This mode consists of the capabilities as shown in Table III.

AGREED.

3.2.1.3 State: Support mission.

A stable condition of the Space Station which may be concurrent with and independent from the ”perform mission” states. This state is characterized by the preparation for execution of and recover from return and resupply services.

AGREED.

3.2.1.3.1 Reserved.

3.2.1.3.2 Mode: Space transport.

This mode consists of those functions provided by the Space Station to support transport of cargo to and from the on–orbit vehicle in the cargo bay of the transporting system. This mode begins with the activation of the logistics carrier functions and completes upon either integration of the cargo or carrier into the on–orbit systems, or upon landing.

3.2.1.3.2.1 Support resupply and return.

3.2.1.3.2.1.1 Capability: Transport cargo.

The RS shall transport to the on–orbit Space Station atmospheric gases within the range defined in Table VII. The RS shall transport crew supplies and logistics to support 3 permanent crew persons within the limits defined in Table VII.

AGREED.

TABLE VII. RS annual cargo requirements

	Annual Average	Annual Maximum (Up To)
Water (H_2O)	1680 kg	2300 kg
Gas (1)	250 kg	250 kg
Crew Supplies	6800 kg	6800 kg
Science	435 kg	3500 kg
Logistics	435 kg	2000 kg
Propellant (UDMH & NTO) does not consider propellant from ATV	9200 kg	11500 kg
Autonomous Thruster Facilities (ATF)	2 every 3 years	
Note: (1) Atmospheric gases include either O_2, N_2, or a combination.		

3.2.2 Physical characteristics.

3.2.2.1 Approach and departure corridor.

The Russian Segment shall have a minimum unobstructed envelope for Orbiter and Russian vehicle approach and departure as specified in Figures 6 and 7.

AGREED.

3.2.2.2 Establish translation paths.

The RS shall supply translation paths with handrails to support controlled, tethered, and 2–handed translation of equipment and crew. Handrails gaps shall not exceed 600 mm. The RS shall provide a designated EVA operations access corridor on the primary translation path along the length of the on–orbit space station.

Handrail grasp clearances shall be at least 75 mm below each rail and its attachment points. At least 100 mm radius clearance shall be maintained around the rail sides and top for gloved hand grasp. Minimum handrail grip length shall be 152 mm.

AGREED.

3.2.2.3 Establish worksites.

The RS shall establish external worksites to support control, tethering, and restraint of the crew and hardware. A dedicated worksite or the capability to install a portable foot restraint shall be supplied at EVA worksite locations where any of the following conditions apply:

a. Two handed operations are required throughout the entire task.

b. Forces are required which exceed the following:

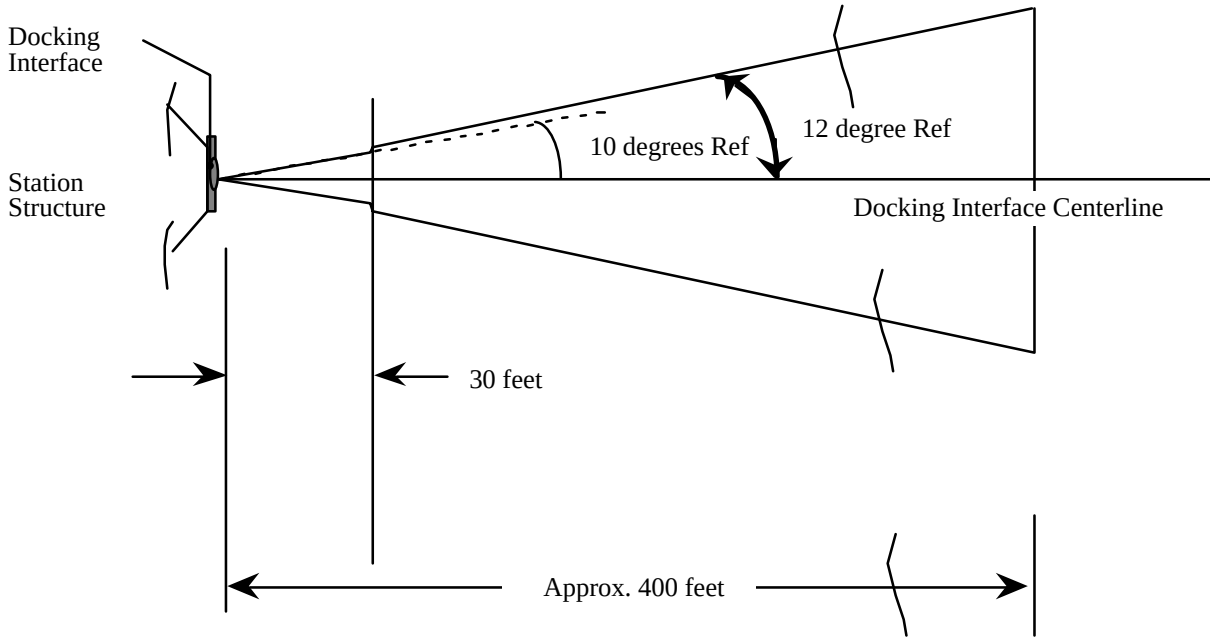

FIGURE 6. Minimum Orbiter approach and departure corridor

Linear Force	Force Duration	Task Duration
3 kg	5 sec., cyclical	10 min
6 kg	30 sec., short	10 min
12 kg	0.5 sec., pulse	> 2 pulses

c. Objects requiring manipulation by a crewmember exceed 50 kg, exceed 1 m along the greatest dimension, or exceed 0.6 m by 0.6 m by 0.6 m total volume.

d. Objects for manipulation do not have a soft dock/soft capture mechanism to aid in installation.

AGREED.

3.2.2.3.1 Common restraint hardware.

All foot restraints shall be compatible with both U.S. and Russian pressurized EVA suits for ingress, work and egress. The RS space suit shall support the attachment and use of common tethers (tethers which are also compatible with U.S. pressurized EVA suits) for body restraint, equipment transport and safety restraint.

AGREED.

3.2.2.4 Provide external and internal stowage of tools and hardware.

The RS shall provide internal stowage for the Orlan space suit support equipment, tools, and consumables.

AGREED.

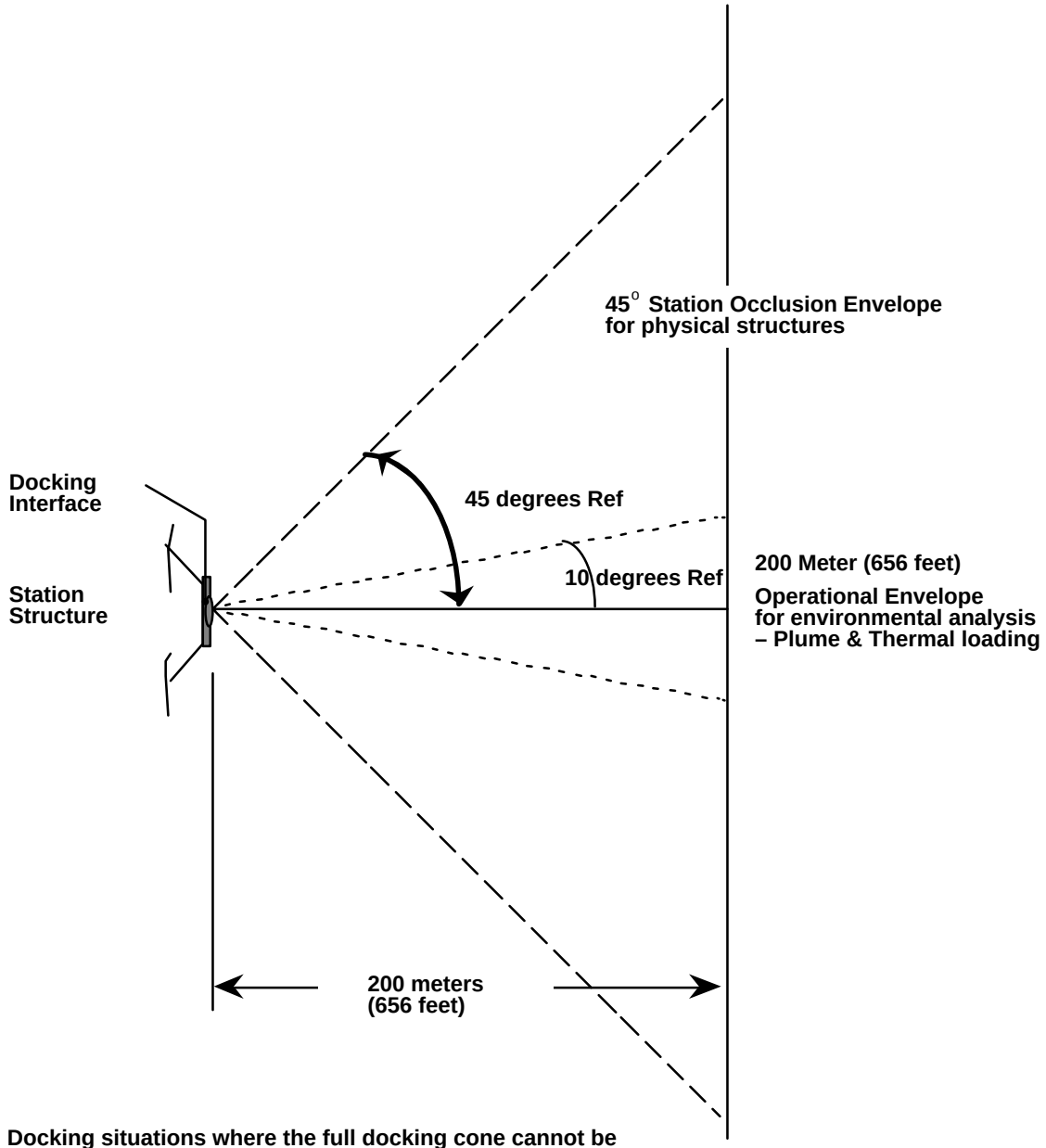

Note: Docking situations where the full docking cone cannot be provided will be evaluated on a case–by–case basis for rejection or acceptability.

FIGURE 7. Minimum Russian approach and departure corridor

3.2.2.5 ISS storage requirements.

The RS shall provide the storage volume necessary for the life support of 1.5 crewmembers.

NOTE: Cargo items delivered on the ATV are stored on the US Segment.

AGREED.

3.2.2.6 Transfer crew and external hardware.

The RS shall support controlled transfer and restraint of crew and equipment to external worksites. Hardware common to both U.S. and Russian EVA suits shall be provided.

AGREED.

3.2.2.7 Distribute commands and data.

a. The RS shall provide MIL–STD–1553 data bus distribution between the Service Module and the FGB for the following buses: CB–GNC–1, CB–GNC–2, LB–CHECS–SM, RS–BUS–1, RS–BUS–2, RS–BUS–3, and RS–BUS–4.

b. The RS shall provide a MIL–STD–1553 bus distribution between the FGB mounted PDGF in accordance with SSP 50227, section C3.2.1.5, and the U.S. LAB in accordance with SSP 42121, paragraph section G3.2.1.5.

AGREED.

3.2.2.7.1 Provide output amplitude.

The RS shall provide a signal amplitude of a minimum of 3.6 volts, peak–to–peak, line–to–line, at the Service Module to FGB interface for Service Module initiated messages transmitted on MIL–STD–1553 buses.

AGREED.

3.2.2.8 SPP.

The SSP shall meet the Orbiter requirements as specified in NASA/RSC–E/3411–SSP.

AGREED.

3.2.2.9 ATV.

The RS shall support the ATV in accordance with SSP 50129 (requirements applicable to RS).

AGREED.

3.2.3 Reliability.

3.2.3.1 Failure Tolerance.

The Russian Segment shall meet the system failure tolerance requirements as specified in Table VIII.

TABLE VIII. RS capability failure tolerances

	Russian segment function	Capability paragraph number Section 3.2.1.1.1	Failure Tolerance Allocation (1) (2) (3) (5)
1	Control total pressure	.1.1	1
2	Control oxygen partial pressure	.1.2	1
3	Relieve overpressure	.1.3	1
4	Equalize pressure	.1.4	1
5	Control atmosphere temperature	.2.1	1
6	Control atmospheric moisture	.2.2	1
7	Circulate atmosphere	.2.3	1
8	Control internal lighting	.3.1	1
9	Illuminate internal areas	.3.2	1
10	Isolate to recovery level	.4.1	*
11	Recover lost function	.4.2	*
12	Isolate for safing	.4.3	*
13	Safe	.4.4	*
14	Maintain station mode	.5.1	1
15	Transition station modes	.5.2	1
16	Provide data to crew	.6.1	1
17	Accept crew inputs and commands	.6.2	1
17A	Provide crew control interface	.6.3	1
18	Acquire function status data	.7.1	*
19	Assess function status data	.7.2	*
20	Respond to fire	.8.1	*
21	Respond to rapid decompression	.8.2	*
22	Respond to hazardous atmosphere	.8.3	*
23	Generate power	.9.1	1(4)
24	Distribute power	.9.2	1(4)
25	Store energy	.9.3	1(4)
26	Collect thermal energy	.10.1	1(4)
27	Distribute thermal energy	.10.2	1(4)

TABLE VIII. RS capability failure tolerances – Continued

	Russian segment function	Capability paragraph number Section 3.2.1.1.1	Failure Tolerance Allocation (1) (2) (3) (5)
28	Dispose of thermal energy	.10.3	1(4)
29	Distribute time	.11.1	1(4)
30	Accommodate crew hygiene/wastes	.12.1	1
31	Support radiation exposure monitoring	.12.2	1
32	Accommodate crew privacy	.12.3	0
33	Support crew personnel items	.12.4	0
34	Support housekeeping	.12.5	1
35	Support crew health	.12.6	1
36	Support recreation and community functions	——	0
37	Support food and water consumption/cleanup	.12.7	1
38	Support food processing	.12.8	1
39	Provide food	.12.9	1
40	Support internal crew restraint and mobility	.12.10	1
41	Control carbon dioxide	.13.1	1
42	Control gaseous contaminants	.13.2	1
43	Control airborne particulate contaminants	.13.3	1
44	Control airborne microbial growth	.13.4	1
45	Provide water for crew use	.14.1	1
46	Supply water for payloads	——	0
47	Provide direct visual access	.15.1	0
48	Provide remote internal visual access	.15.2	1
49	Display USOS provided video signal	.15.3	1
50	Transmit voice communication	.16.1	1
51	Reserved		
52	Reserved		
53	Reserved		
54	Support service and checkout	.17.3	1
55	Determine state vector and attitude	.18.1	1

TABLE VIII. RS capability failure tolerances – Continued

	Russian segment function	Capability paragraph number Section 3.2.1.1.1	Failure Tolerance Allocation (1) (2) (3) (5)
56	Maintain attitude – nonpropulsive (Failure tolerance for this function does not consider ATV.)	.19.1	1
57	Support uplinked data	.20.1	1
58	Provide data for downlink	.20.2	1
59	Provide data for uplink	.20.3	1
60	Support downlinked data	.20.4	1
61	Support internal equipment translation	.21.1	0
62	Support internal equipment removal and replacement	.21.2	0
63	Support internal equipment identification	.21.3	0
64	Support internal equipment restraint	.21.4	0
65	Support orbit replaceable unit repair	.21.5	0
66	Store internal equipment	.21.6	0
67	Support external input data	.22.1	1
68	Provide data for external vehicles	.22.2	1
69	Support external vehicle wave–off	.22.3	1
70	Space Station system performance analysis	——	1
71	Support on–orbit operations (Failure tolerance for this function does not consider ATV.)	.23.1	1
72	Execute maneuver guidance (Failure tolerance for this function does not consider ATV.)	Section 3.2.1.1.2.1.1	1
73	Execute translational thrust (Failure tolerance for this function does not consider ATV.)	.2.1.2	1
74	Rotational control (Failure tolerance for this function does not consider ATV.)	.2.2.1	1
75	Provide desaturation torque (Failure tolerance for this function does not consider ATV.)	.2.2.2	1
76	Limit accelerations (Failure tolerance for this function does not consider ATV.)	.4.1.1	1
77	Support voice and data communication	.7.1.1	1
78	Support station egress	.7.1.2	1
79	Transfer external crew and hardware	.7.1.3	1

TABLE VIII. RS capability failure tolerances – Continued

	Russian segment function	Capability paragraph number Section 3.2.1.1.1	Failure Tolerance Allocation (1) (2) (3) (5)
80	Support station ingress	.7.1.4	1
81	Reserved		
82	Track external crew	.7.1.6	1
83	Support assured crew return	.8.1.1	0
84	Perform prelaunch processing		N/A
85	Perform Space Station integration		N/A
86	Perform launch package integration		N/A
87	Transfer launch package to pad		N/A
88	Perform launch pad operations		N/A
89	Transport cargo (Failure tolerance for this function does not consider ATV.)		N/A
90	Deintegrate hazardous cargo element/end item		N/A
91	Process hardware for disposition		N/A

(1) Crew transportation and rescue vehicles may not be considered a redundant path to meet these requirements
(2) Maintenance may not be considered as a redundant path to meet these requirements.
(3) Redundancy required to provide failure tolerance for a capability/function may be similar or dissimilar.
(4) Degraded performance allowed after 1 failure.
(5) Safety failure tolerance defined by requirements 3.3.6.1.4.2 and 3.3.6.1.5.2 take precedence over the Reliability failure tolerance requirements where the loss of function may result in a hazard.
* Failure Tolerance will match the failure tolerance of the function being supported.

AGREED.

3.2.3.2 Service Life.

The Russian Segment shall provide full capability for a period of at least 15 years after the first RS element is launched. Support identified to maintain full capability shall be provided by RSA.

See 3.7.6.5.12 for Soyuz specific requirements.

See 3.7.7.3.24 for Cargo Vehicle specific requirements.

AGREED.

3.2.3.3 Failure propagation.

A single RS equipment failure shall not induce failures across the RS/USOS interfaces which are defined in SSP 42121 ICD, section 3.2.2.

AGREED.

3.2.3.4 Redundancy status.

For functionality which is required to operate continuously, periodic checkout of redundant functional paths shall permit the determination of their operational status without removal of ORUs or the interruption of the segment's primary functional path operation.

AGREED.

3.2.4 Maintainability.

3.2.4.1 Qualitative maintainability requirements.

Hardware and software shall be maintainable to allow functions to be reinstated or restored throughout the intended operational life of the on–orbit space station.

AGREED.

3.2.4.1.1 Reserved.

3.2.4.1.2 Procedures and Tools.

The RS shall provide all on–orbit procedures and tools necessary to performing maintenance on RS equipment.

The RS shall provide a common system for foot restraint, safety tethering, and equipment tethering which interfaces with both U.S. and Russian EVA suits.

AGREED.

3.2.4.2 Quantitative maintainability requirements.

3.2.4.2.1 Equipment maintenance time in nonpressurized areas.

RS equipment which is located in nonpressurized areas, shall be designed such that either the total maintenance time does not exceed 5 hours, or the activity can be partitioned into segments which do not exceed 5 hours. At the conclusion of an EVA maintenance task, all affected systems shall be left in a safe and functional condition.

AGREED.

3.2.4.2.2 Capability: Total Mean Maintenance Crew Hours/Year (TMMCH/Y).

3.2.4.2.2.1 EVA Total Mean Maintenance Crew Hours/Year.

The on–orbit RS crew time resource for EVA maintenance shall be no greater than an average of 115 EVA TMMCH/Y, from airlock egress to airlock ingress.

AGREED.

3.2.4.2.2.2 IVA Total Mean Maintenance Crew Hours/Year.

The on–orbit RS crew time resource for IVA maintenance shall be no greater than an average of 1870 IVA Total Mean Maintenance Crew Hours per Year.

AGREED.

3.2.4.2.2.2.1 IVA in support of EVA.

Of the total crew time resource for IVA maintenance, no more than 180 hours shall be IVA in support of EVA.

AGREED.

3.2.4.2.3 Airlock cycles to support EVA.

RS EVA maintenance demand shall not require more than 10 airlock depress/repress cycles per year.

AGREED.

3.2.4.3 Failure Detection, Isolation and Recovery.

3.2.4.3.1 Manual control of FDIR.

To assist during periods of maintenance and non–nominal activity, the RS shall provide for manual control of automatic failure detection, isolation, and recovery control processes. This does not preclude the planned use of automatic FDIR capabilities.

AGREED.

3.2.4.3.2 Testing at operating location.

The RS shall detect and isolate out–of–tolerance conditions, functional anomalies, and functional operations that may manifest a catastrophic or critical hazard without removal of equipment from its operating location or use of ancillary test equipment.

AGREED.

3.2.4.3.3 Manual FDIR.

The following categories of equipment shall utilize crew interaction or crew observation for failure detection, isolation, annunciation, and recovery.

a. Human/equipment interface such as visual display devices, cursor control devices, manual input devices.

b. General and specialized lighting.

c. Visual and aural caution and warning devices such as warning panel lamps/lights, speakers and volume controls.

d. Structural, mechanical, electromechanical, and electrical equipment that have no interconnection for data collection and transmission to the core computational data network.

The intent is not to require special instrumentation for fluid, power and data lines, structure and manually operated equipment.

e. One time use equipment that has manual redundancy (crew intervention upon failure of automatic function) and is not intended to be maintained on–orbit during the life of the program such as bolt motor controllers for assembly operations.

AGREED.

3.2.4.3.4 Automatic functional recovery confirmation.

The RS shall indicate that a failed function has been restored following successful automatic functional recovery. The RS shall issue a caution or warning message after an unsuccessful automatic function recovery.

AGREED.

3.2.4.3.5 Automatic safing confirmation.

The RS shall indicate that an unsafe condition has been made safe following a successful automatic safing action. The RS shall issue a caution or warning message following an unsuccessful automatic safing action.

AGREED.

3.2.4.3.6 False alarm mitigation.

The RS shall utilize methods to reduce the number of false indications of automatically detected out–of–tolerance, failure, or hazard conditions prior to declaring the condition.

AGREED.

3.2.4.4 Pressure integrity.

Hatches and seals where integrity is required to maintain pressurization shall be accessible for inspection, maintenance, or repair by crewmembers.

AGREED.

3.2.5 Docking mechanism and contact conditions.

Russian Segment active docking vehicle Motion Control Systems shall control docking contact conditions within the limits specified in Tables VIII–A, VIII–B, VIII–C, and VIII–D. The Space Station shall withstand docking loads resulting from either worst case combinations or 99.87 percentile statistical combinations of docking contact parameters defined in these tables. When statistical combinations of contact parameters are used, the 99.87 percentile combinations of parameters shall be determined from verified simulations of Motion Control System performance for the specific docking event. The forcing functions used to determine docking contact force time histories from the docking contact parmeters shall be computed by the joint NASA/RSA Probe and Cone docking mechanism model.

See 3.7.6.5.9.3.6 for Soyuz specific requirements.

See 3.7.7.3.26 for Cargo Vehicle specific requirements.

TABLE VIII–A. Relative docking contact conditions for Russian active docking vehicle weights of approximately 7–8 metric tons (15,500 – 17,600 lbs.)

Closing Range Rate, Vx*	<0.1 –0.3 meters per second
Total Lateral Velocity Magnitude	</=0.1 meters per second
Roll Rate about Docking Probe Axis	</=0.7 degrees per second
Total Pitch and Yaw Rate	</=0.7 degrees per second
Lateral Misalignment (Promah)	</=0.3 meters
Resultant Pitch and Yaw Angle	</=6.0 degrees
Roll Angle Misalignment	</=4.0 degrees
Post Contact Thrust Magnitude	</=20 kilogram force
Except for vehicles dkg at DSM nadir where closing range rate shall be </= 0.2 m/s and lateral misalignment shall be </= 0.2 m. Improvements to the vehicle MCS are needed before this level of performance can be met. If vehicles with MCS upgrades are not available when the first vehicle docking at DSM is scheduled, then the DSM nadir port shall be considered un–useable until the vehicles with modified MCS are available.	

AGREED.

TABLE VIII–B. Relative docking contact conditions for Russian active docking vehicle weights of approximately 12 metric tons (26,500 lbs.) and for assembly stages prior to Flight 13A

Closing Range Rate, Vx	</=0.20 meters per second
Total Lateral Velocity Magnitude	</=0.1 meters per second
Roll Rate about Docking Probe Axis	</=0.7 degrees per second
Total Pitch and Yaw Rate	</=0.7 degrees per second
Lateral Misalignment (Promah)	</=0.3 meters
Resultant Pitch and Yaw Angle	</=6.0 degrees
Roll Angle Misalignment	</=4.0 degrees
Post Contact Thrust Magnitude	</=60 kilogram force

AGREED.

TABLE VIII–C. Relative docking contact conditions for Russian active docking vehicle weights of approximately 12 metric tons (26,500 lbs.) and for assembly stages after Flight 13A

Closing Range Rate, Vx	</=0.15 meters per second
Total Lateral Velocity Magnitude	</=0.057 meters per second
Roll Rate about Docking Probe Axis	</=0.7 degrees per second
Total Pitch and Yaw Rate	</=0.7 degrees per second
Lateral Misalignment (Promah)	</=0.15 meters
Resultant Pitch and Yaw Angle	</=6.0 degrees
Roll Angle Misalignment	</=4.0 degrees
Post Contact Thrust Magnitude	</=60 kilogram force

AGREED.

TABLE VIII–D. Relative docking contact conditions for Russian active docking vehicle weight of approximately 20 MT (44,100 lbs)

UDM (Rev D Assembly Sequence)	
Closing Range Rate, Vx	0.1 to 0.2 meters per second
Total Lateral Velocity Magnitude	</=0.07 meters per second
Roll Rate about Docking Probe Axis	</=0.6 degrees per second
Total Pitch and Yaw Rate	</=0.5 degrees per second
Lateral Misalignment (Promah)	</=0.15 meters
Resultant Pitch and Yaw Angle	</=4.0 degrees
Roll Angle Misalignment	</=7.0 degrees
Post Contact Thrust Magnitude	</=40 +/– 5 kilogram force along longitudinal axis.
DSM DOCKING AT FGB NADIR (Rev D Assembly Sequence)	
Closing Range Rate, Vx	</= 0.15 meters per second
Total Lateral Velocity Magnitude	</=0.07 meters per second
Roll Rate about Docking Probe Axis	</=0.6 degrees per second
Total Pitch and Yaw Rate	</=0.5 degrees per second
Lateral Misalignment (Promah)	</=0.15 meters
Resultant Pitch and Yaw Angle	</=4.0 degrees
Roll Angle Misalignment	</=7.0 degrees
Post Contact Thrust Magnitude	</=40 +/– 5 kilogram force along longitudinal axis.

AGREED.

3.2.6 Environmental conditions.

3.2.6.1 On–orbit environmental conditions.

3.2.6.1.1 Thermal environment.

The RS shall meet the performance requirements specified herein when exposed to the thermal solar constants, albedo, and earth Outgoing Long–wave Radiation (OLR) environments defined in Table IX, a space sink temperature of 3 degrees Kelvin, the induced thruster plume environment from ISS thrusters and thrusters on vehicle(s) docking with and docked to the Space Station; and thermal interactions with all other on–orbit segments. In addition, the RS shall meet the performance requirements specified herein following exposure to the extreme hot and cold thermal environments defined in X, a space sink temperature of 3 degrees Kelvin, the induced thruster plume environment and induced thermal environments from ISS thrusters and vehicle(s) docking and docked with the Space Station; and thermal interactions with all on–orbit segments.

AGREED.

TABLE IX. Hot and cold natural thermal environment[1]

Condition[2]	Orbit Time[4]					
	0 to 0.25 hr		0.25 to 0.4 hr		After 0.4 hr	
	Albedo	OLR (W/m^2)	Albedo	OLR (W/m^2)	Albedo	OLR (W/m^2)
Cold A	(3)	207	(3)	177	0.27	217
B	(3)	207	(3)	177	0.22	241
Mean					0.27	241
Hot A (5)	0.21	287	0.20	307	0.27	273
B	0.36	241	0.40	241	0.35	241

Solar Constants (W/m^2)

Cold 1321

Mean 1371

Hot 1423

Notes:

1. Values in this table are expected to be exceeded no more than 0.5% of the time. Albedo and OLR are adjusted to the top of the atmosphere (30 km altitude).
2. Both Set A and Set B are design requirements.
3. No Albedo value, extreme cold case occurs in eclipse.
4. Referenced to orbit location per Figures 7–A and 7–B.
5. Line A as noted on this Table was developed from the Probability Table as specified in SSP 50094, section 13.

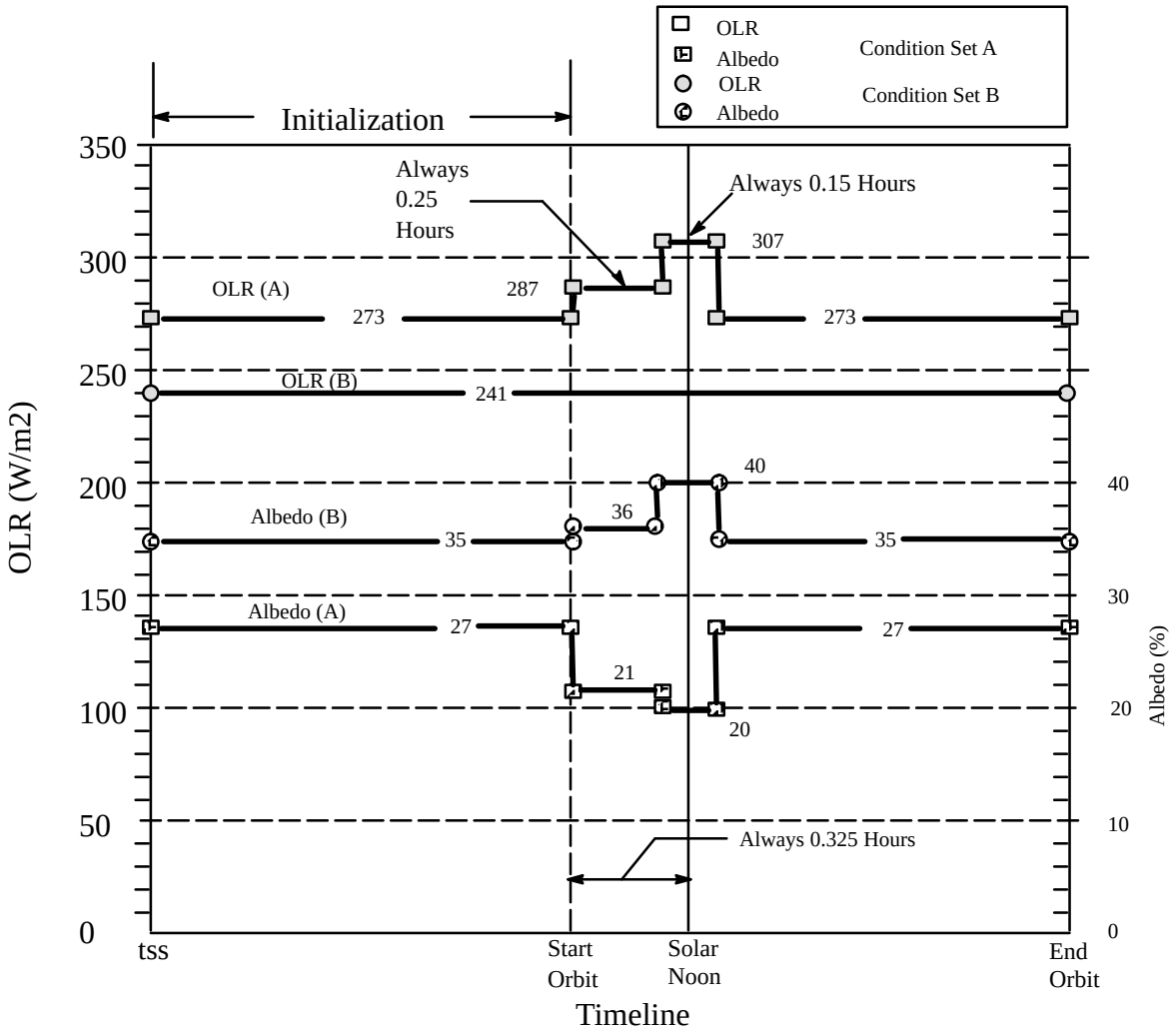

FIGURE 7–A. Design hot thermal environment profile

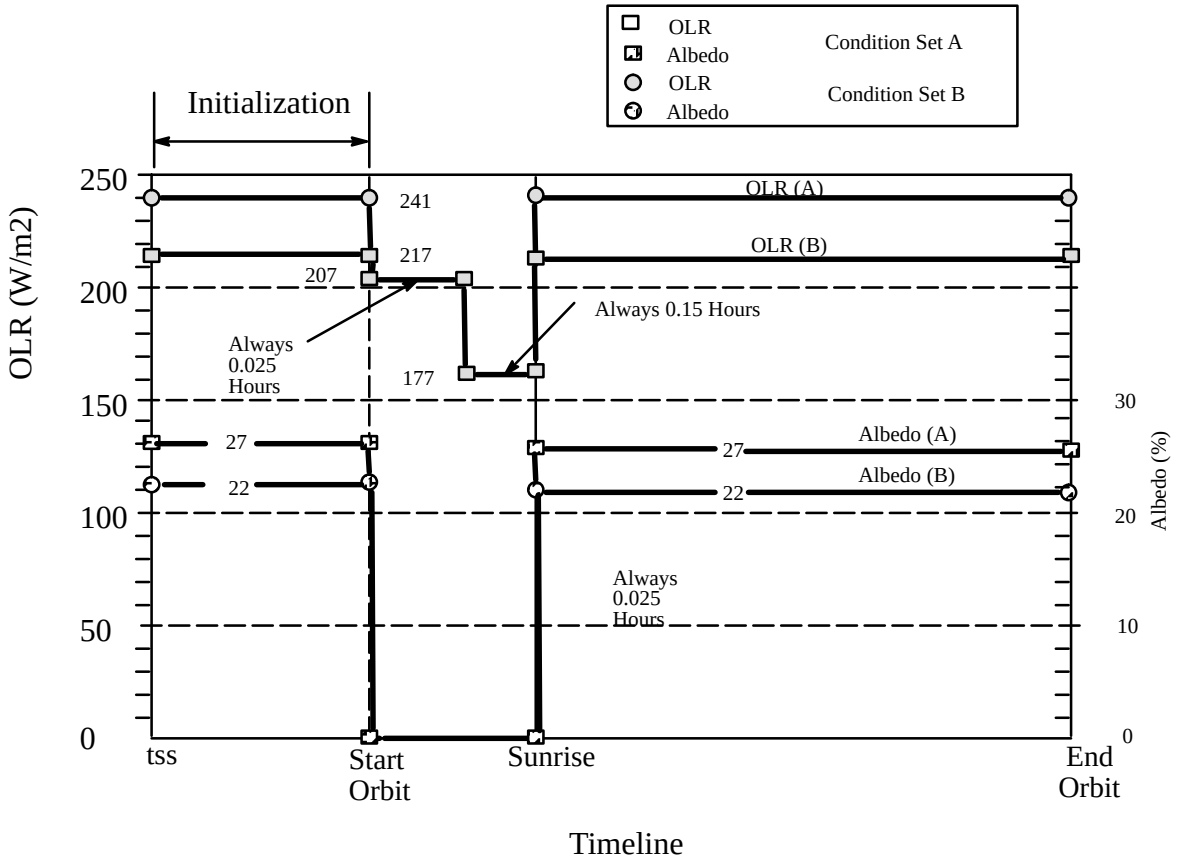

FIGURE 7–B. Design cold thermal environment profile

TABLE X. Extreme hot and cold natural thermal environment[1]

Condition[2]	Orbit Time[4]					
	0 to 0.25 hr		0.25 to 0.4 hr		After 0.4 hr	
	Albedo	OLR (W/m^2)	Albedo	OLR (W/m^2)	Albedo	OLR (W/m^2)
Cold A	(3)	191	(3)	153	0.27	206
B	(3)	191	(3)	153	0.20	241
Hot A (5)	0.25	323	0.25	349	0.30	286
B	0.45	241	0.53	241	0.40	241

Notes:
1. Values in this table are expected to occur no more than 0.05% of the time. Albedo and OLR are adjusted to the top of the atmosphere (30 km altitude).
2. Both Set A and Set B are design requirements.
3. No Albedo value, extreme cold case occurs in eclipse.
4. Referenced to orbit location per Figures 7–C and 7–D.
5. Line A as noted on this Table was developed from the Probability Table as specified in SSP 50094, section 13.

3.2.6.1.2 Neutral atmosphere.

The RS shall meet the performance requirements specified herein when exposed to the atmospheric density defined SSP 50094, paragraph 3.2. Solar activity parameters applicable to specific Space Station functions are given in Table XI.

AGREED.

TABLE XI. Solar and geomagnetic parameter applicable to Space Station design

Function	Solar and Geomagnetic Parameters
Guidance, Navigation, and Control	Max $F_{10.7}$ and Ap Profile as specified in SSP 50094, paragraph 3.2 with a cycle start date of August 1996.
Propulsion and Reboost	Max $F_{10.7}$ and Ap Profile as specified in SSP 50094, paragraph 3.2 with the following cycle start dates. July 1995 (early minimum) August 1996 (most likely minimum) September 1997 (late minimum)

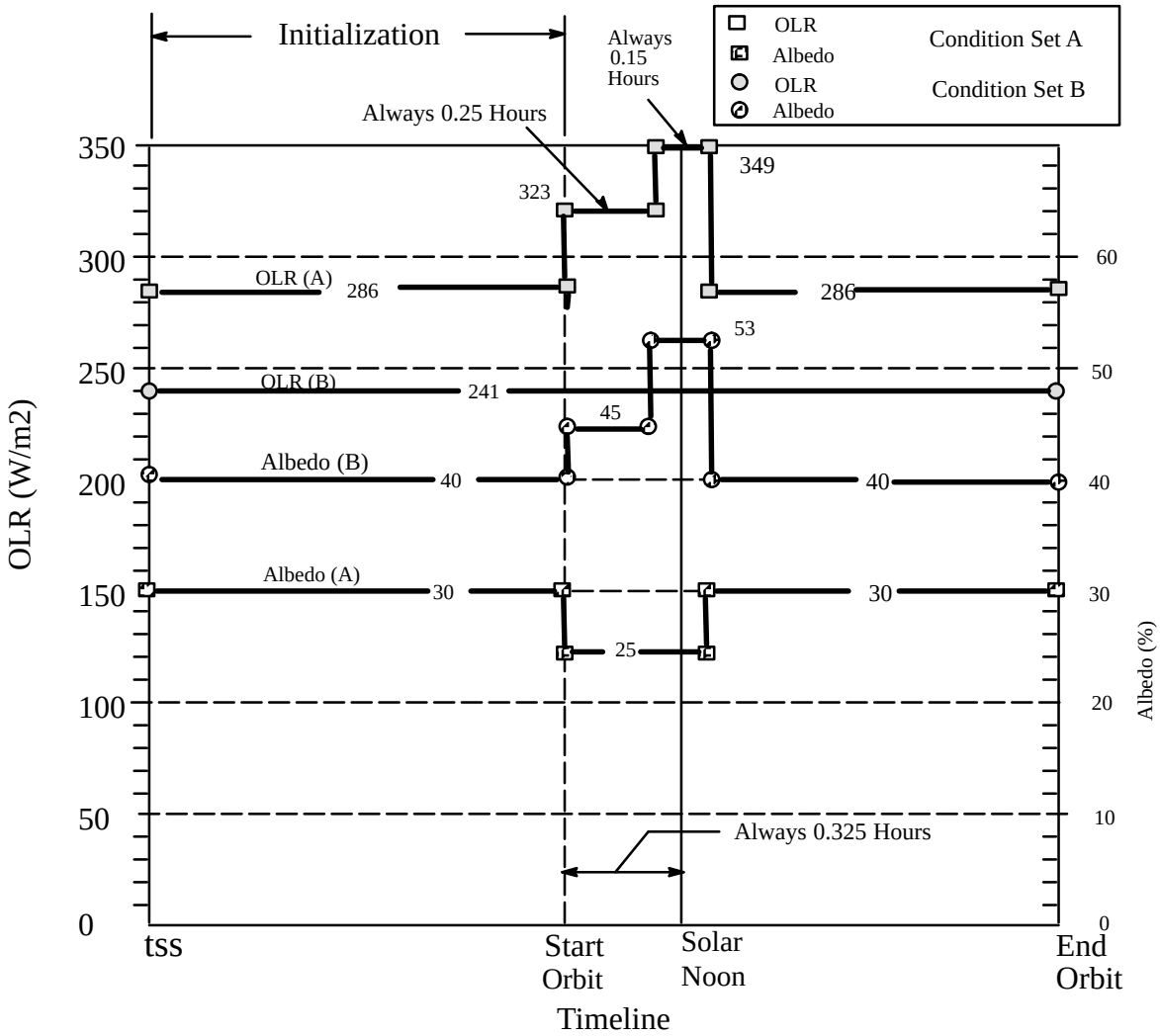

FIGURE 7–C. Extreme hot thermal environment profile

3.2.6.1.3 External contamination.

The RS shall meet the performance and design requirements specified herein when exposed to the quiescent and nonquiescent contamination environments defined in SSP 50094, paragraph 3.3.

AGREED.

3.2.6.1.4 Electromagnetic and geomagnetic fields.

The RS shall meet the performance requirements specified herein when exposed to the on–orbit electric field environment defined in Figure 8. The RS shall meet the performance requirements specified herein when exposed to the geomagnetic field environment defined in SSP 50094, paragraph 3.4.

AGREED.

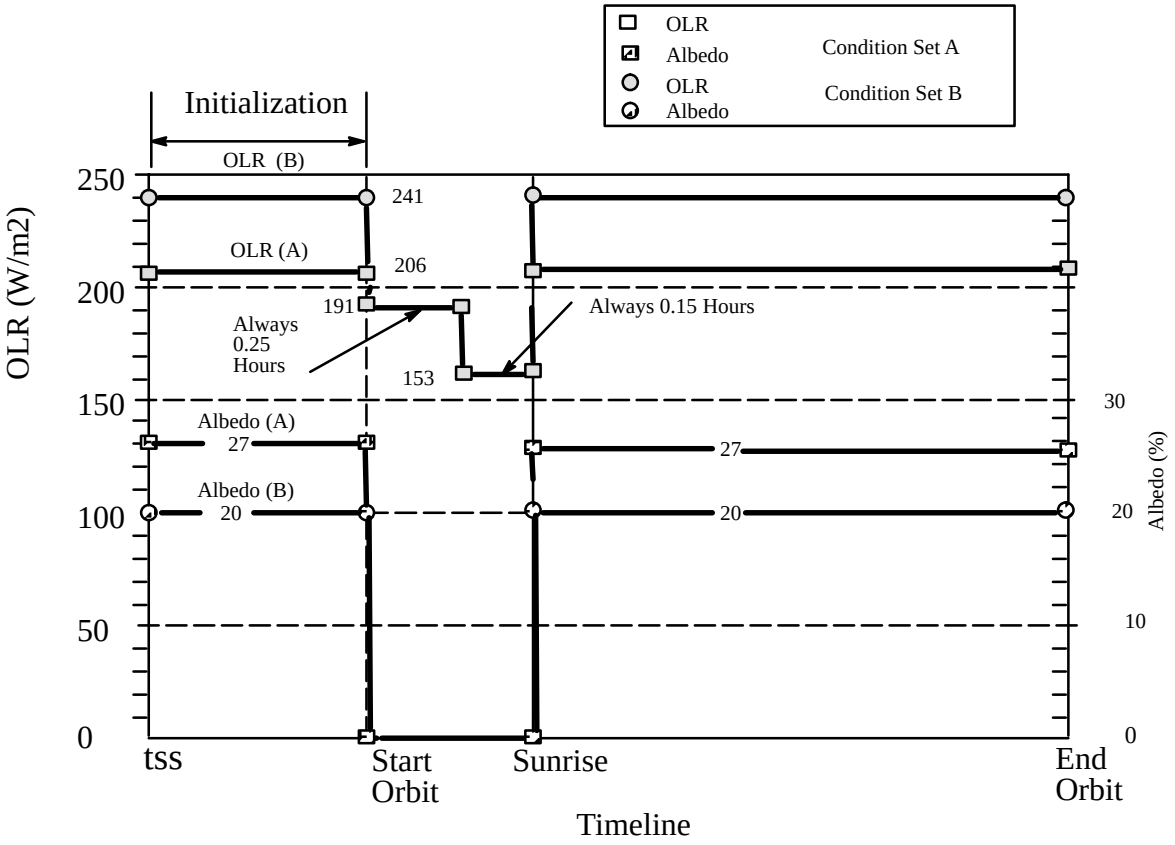

FIGURE 7–D. Extreme cold thermal environment profile

3.2.6.1.5 Plasma.

The RS shall meet the performance and design requirements specified herein when exposed to the natural plasma environment defined in SSP 50094, paragraph 3.5, and the induced environment defined in SSP 50094, paragraph 3.5. The difference between the RS structure floating potential and the local plasma potential does not exceed +/– 40 volts.

AGREED.

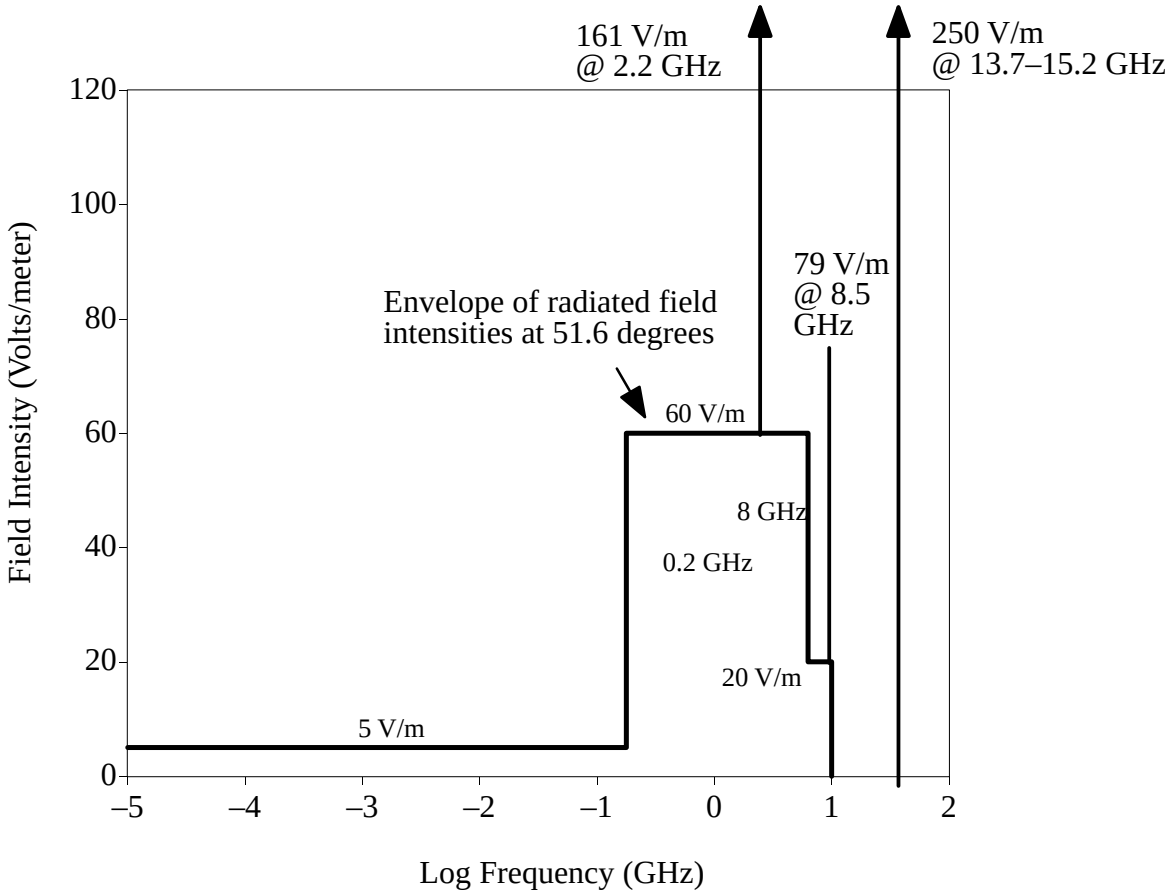

FIGURE 8. On–orbit electric field environment

3.2.6.1.6 Ionizing radiation.

The RS shall meet specified performance when exposed to the radiation dose environment defined in SSP 50094, paragraph 3.6. The RS shall meet specified performance when exposed to the nominal Single Event Effects (SEE) environment defined in SSP 50094, paragraph 3.6. The RS shall meet specified survival mode performance when exposed to the extreme SEE environment defined in SSP 50094, paragraph 3.6.

AGREED.

3.2.6.1.7 Reserved.

3.2.6.1.8 Meteoroids and Orbital Debris (M/OD).

The RS shall meet the performance requirements specified herein when exposed to the meteoroid and orbital debris environments defined in SSP 50094, paragraph 3.8. Parameters of Space Station M/OD environments definition are given in Table XII.

AGREED.

TABLE XII. Parameters for M/OD environments definition

Altitude	215 nautical miles (400 km)
Space Station attitude	LVLH 10% of the time (Orbiter attached) TEA 90% of the time (Orbiter not attached)
Orbital inclination	51.6 degrees
Solar flux	70 x 10^4 Jansky ($F_{10.7}$ = 70)
Orbital debris density	2.8 gm/cm^3 (for M/OD critical items only)
Maximum debris diameter	20 cm (for probability of no penetration assessments only)

3.2.6.1.9 Reserved.

3.2.6.1.10 Plume impingement pressures.

The RS (except for solar arrays and radiators) shall withstand the maximum effective normal and shear plume impingement pressures defined below:

a. Normal pressure 1.67 x E–3 kg/cm2 (3.42 psf)

b. Shear pressure 3.91 x E–4 kg/cm2 (0.80 psf)

AGREED.

3.2.6.1.11 Flight attitude table.

The RS shall meet the appropriate performance requirements as specified herein within the environments as specified in paragraphs 3.2.6.1.1 through 3.2.6.1.10 for the corresponding attitude envelopes of Table XII–A.

AGREED.

TABLE XII–A. Flight attitudes

Stage / Flight	Flight Manifest	Attitude						Note
		Space Station			U. S. Orbiter/Space Station Mated			
		Low Beta	Middle Beta	High Beta	Low Beta	Middle Beta	High Beta	
1A/R	FGB	Multi–Axis SPIN	Multi–Axis SPIN	Multi–Axis SPIN				
2A	Node 1, PMA1 & 2	X Nadir SPIN	X Nadir SPIN	X Nadir SPIN	A	A	B	I
1R	Service Mod-ule	A	X Nadir SPIN	X Nadir SPIN				
2R	Soyuz	B	B	B				
3R	UDM	B	B	B				
3A	Z1, PMA3	B	B	B	B	B	B	I
4R	DC	B	B	B				
4R.1	SM Array Augmentation	B	B	B				
4A	P6 Solar Array	A	A	B	B	B	B	II
5R	SPP–1	A	A	B				
5A	USL	A	A	B	A	A	Not applicable	II, III

TABLE XII–A. Flight attitudes – Continued

Stage / Flight	Flight Manifest	Attitude						Note
		Space Station			U. S. Orbiter/Space Station Mated			
		Low Beta	Middle Beta	High Beta	Low Beta	Middle Beta	High Beta	
6A	MPLM, SSRMS	A	A	B	A	B	B	
6R	SPP–2	A	A	B				
UF–1	MPLM	A	B	B	A	B	B	
7A	Airlock	A	B	B	A	B	B	
8A	S0, MT, GPS	A	B	B	A	B	B	
7R	4 SPP Arrays	A	B	B				
UF–2	MPLM, MBS	A	B	B	A	B	B	
9A	S1	A	B	B	A, B	B	B	IV
7R.1	4 SPP Arrays	A	B	B				
10A	Node 2, Cupola	A	B	B	A, B	B	B	IV
11A	P1, UHF	A	B	B	A, B	B	B	IV
8R	RM–1	A	B	B				
12A	P3/4 Solar Array	A	A	A	A, B	B	B	IV
9R to End–Of–Life		A	A	A	A	A	A	

Attitude Variation

Attitude Mode	Station Alone			Orbiter Mated			
	Yaw	Pitch	Roll	Yaw	Pitch	Roll	Attitude / Reference Frame
X VV Z Nadir	+/–15 deg	+/–15 deg	+/–15 deg	+/–15 deg	0 deg to 25 deg	+/–15 deg	LVLH 0 deg/0 deg/0 deg
XPOP Inertial	+/–10 deg	+5 deg to –20 deg	+/–10 deg	+/–10 deg	0 deg to 25 deg *	+/–10 deg	XPOP Inertial Ref
X Nadir SPIN	+/–15 deg	+/–15 deg	Rolling at 1 deg/sec	Not applicable			LVLH 0 deg/–90 deg/ Rolling
Multi–Axis SPIN	0.5 deg/sec	0.5 deg/sec	0.5 deg/sec	Not applicable			LVLH

* XPOP Inertial mated attitude envelope for flight 2A & 3A (Node1 & Z1) is – 30 deg to + 30 deg in pitch attitude.

Attitudes for Special Operations

Symbol Key		Beta Range Definitions		Special Operation	Attitude (Yaw/Pitch/Roll)	MAX Variation (Yaw/Pitch/Roll)
X VV Z Nadir TEA Attitude	A	Low Beta	0 to +/–37 deg	Docking Attitude (Note V)	0 deg/0 deg/ 0 deg	+/– 1 deg each axis
X POP Inertial Attitude **	B	Middle Beta	+/–37 deg to +/–52 deg	Separation Attitude	Mated TEA	+/– 5 deg
** The Space Station can also fly in an X VV Z Nadir attitude		High Beta	+/–52 deg to +/–75 deg	Reboost Attitude	0 deg/0 deg/ 0 deg	+/– 15 deg each axis

Notes

I	The Station is rotated 180 degrees in the roll axis from the normal Orbiter mated geometry. This rotation permits Z1 assembly on top of Node 1. Mated X VV Z Nadir becomes X VV Z Zenith. Mated XPOP Inertial becomes +Z Zenith at orbital noon.
II	The Orbiter docks to the station at the Node 1 nadir PMA to permit P6 assembly on top of Z1 and USL assembly to Node 1.
III	Launch Window Constraint: Assembly flight 5A, USL, will not be flown at solar Beta angles > 52 degrees in order to avoid assembly with the XPOP flight attitude – which would result in excessively cold USL temperatures.
IV	Assembly flight may fly XPOP Inertial to a solar Beta as low as +/– 30 degrees to improve power generation.
V	Exceptions are the Flight 2A docking attitude which is 0 deg/90 deg/ 180 deg (X Zenith –Z VV). Flight 3A docking Attitude is 0 deg/ –90 deg/ 180 deg (X Nadir Z VV).

General Notes

(1)	The planned Orbiter approach trajectories are V–bar with the exception of flights 2A, 3A, 4A, and 5A. The flight 2A trajectory is – R–bar. The flight 3A, 4A, and 5A trajectories are R–bar.

TABLE XII–A. Flight attitudes – Continued

		Attitudes for Special Operations		
Symbol Key	Beta Range Definitions	Special Operation	Attitude (Yaw/Pitch/Roll)	MAX Variation (Yaw/Pitch/Roll)
(2)	The Space Station orbital inclination is 51.6 degrees.			
(3)	The Space Station can fly at any interim attitude for a brief period while maneuvering between attitude modes at a minimum maneuver rate of 0.1 degrees/ second in each axis.			
(4)	Basic vehicle orientations are described by indicating the direction that Space Station body axes are pointing. VV is the Velocity Vector, Zenith is up, and Nadir is down.			
(5)	Space Station altitude varies between 180 and 270 nautical miles.			
(6)	When TEA (torque equilibrium attitude) is also specified, it means that the attitude will be the nearest TEA to the designated orientation.			
(7)	All attitudes are Yaw, Pitch, Roll Euler angle rotation sequence with 0,0,0 YPR aligned with the LVLH reference frame.			
(8)	Russian mated flight (Soyuz, Progress, etc.) are the same as station free–flying.			
(9)	Deleted			
(10)	Maximum duration in an Orbiter–mated attitude is 13 days + 1 extension day.			
(11)	XPOP: The Space Station X–principle inertia axis points parellel to the negative orbital angular momentum vector when the solar Beta angle is positive (Beta angle > 0) and the Space Station X–principle inertia axis points along the positive angular momentum vector when the solar Beta angle is negative (Beta angle < 0); the positive Z–principle inertia axis points down/nadir toward Earth at orbital noon.			
(12)	The applicable attitudes are from end item on–orbit attachment through assembly complete.			
(13)	The XPOP Inertial Flight Attitude does not apply to M/OD Probability of No Penetration (PNP) structural protection requirements.			
(14)	The Flight Attitude table for the FGB shall be as specified in the FGB specification SSP 50128.			

3.3 Design and construction.

3.3.1 Materials, processes and parts.

3.3.1.1 Reserved.

3.3.1.2 Reserved.

3.3.1.3 Materials and processes.

Materials and processes shall be in accordance with SSP 50094, paragraph 4.3.

AGREED.

3.3.1.4 Electrical, Electronic, and Electromechanical (EEE) parts.

All EEE parts for flight hardware shall meet the requirements as specified in SSP 50094, section 4.1.

AGREED.

3.3.1.5 Seal life.

Nonmetallic seal materials shall be selected to operate within design parameters for the 10 year on–orbit life of the Space Station or be designed for on–orbit replaceability. Performance life shall include storage time and environment before use.

See 3.7.6.5.12.1 for Soyuz specific requirements.

See 3.7.7.3.24.1 for Cargo Vehicle specific requirements.

AGREED.

3.3.1.6 Fluid and Connector standards.

a. Fluids shall be in accordance with SSP 50094, paragraph 4.2.3.

b. All connectors shall be in accordance with SSP 50094, paragraphs 6.4.5.1, 6.4.5.2 and 6.4.5.3.

AGREED.

3.3.1.7 Capability: Provide propellants and pressurant gases.

All propellants and pressurant gases loaded into Russian propulsion and propellant resupply systems shall meet the requirements defined in SSP 50094, section 10.

AGREED.

3.3.2 Electromagnetic radiation.

3.3.2.1 Electromagnetic Compatibility (EMC).

The RS shall be in accordance with SSP 50094, paragraph 3.4.

AGREED.

3.3.3 Nameplates and product marking.

Equipment labeling for the on–orbit crew interface shall be in accordance with SSP 50094, paragraph 6.4.7.

AGREED.

3.3.3.1 Labeling.

Label markings shall be standardized for format, location, and criteria in accordance with SSP 50094, paragraph 6.4.7.

AGREED.

3.3.3.1.1 Vendor labels.

ORUs shall be labeled with serial number and system code number.

AGREED.

3.3.3.2 On–orbit labels.

RS equipment shall be labeled to support equipment identification, assist in inventory management, provide operating instructions, and support hazard identification in accordance with SSP 50094, paragraph 6.4.7.

AGREED.

3.3.4 Workmanship.

Workmanship standards shall be employed throughout all phases of hardware manufacture. These standards shall be in accordance with SSP 50094, paragraph 4.3.4.6. Workmanship standards do not apply to Commercial–Off–The–Shelf (COTS) equipment.

AGREED.

3.3.4.1 Cleanliness.

The interior surfaces of habitable volumes and exterior surfaces of flight articles integrated into habitable volumes shall conform to cleanliness requirement as specified in SSP 50094, paragraph 4.2.1, unless a specific hardware item requires a more stringent cleanliness level. Exterior surfaces of the habitable volume shall conform to the cleanliness requirements as specified in SSP 50094, paragraph 4.2.1.

AGREED.

3.3.4.2 Cleanliness of surfaces in contact with fluids.

Internal surfaces of the volume subsystems, components, valves, lines, etc., which are in contact with fluids shall meet the minimum cleanliness levels as specified in SSP 50094, paragraph 4.2.2, for that fluid prior to servicing the subsystem, lines, etc., with the working fluid. Subsequent packaging shall be in accordance with SSP 50094, paragraph 4.2.2, to maintain the cleanliness level of the subsystem, lines, etc., until servicing with the working fluid.

AGREED.

3.3.5 Reserved.

3.3.6 Safety.

3.3.6.1 General.

3.3.6.1.1 Catastrophic Hazards.

The RS shall be designed such that no combination of two failures, two operator errors, or one of each can result in a disabling or fatal flight crew injury, or loss of one of the following: Orbiter, ISS, or a major ground facility. Compliance with this requirement may be accomplished at the End Item level or through a combination of hazard controls (See 6.2) at the Segment/System levels.

AGREED.

3.3.6.1.2 Critical Hazards

The RS shall be designed such that no single failure or single operator error can result in a non–disabling personnel injury, severe occupational illness; loss of a major ISS element, on–orbit life sustaining function or emergency system; or involves damage to the Orbiter or a ground facility. Compliance with this requirement may be accomplished at the End Item level or through a combination of controls at the Segment/System levels.

AGREED.

3.3.6.1.3 Design for minimum risk.

Hazards related to ”Design for minimum risk” (See 6.2) areas of design shall be controlled by the safety related properties and characteristics of the design, such as margin or factors of safety,that have been baselined by ISS program requirements. The failure tolerance criteria of paragraphs 3.3.6.1.1 and 3.3.6.1.2 are only to be applied to these designs as necessary to assure that credible failures that may affect the design do not invalidate the safety related properties of the design. Examples of ”Design to minimum risk” areas of design are mechanisms, structures, glass, pressure vessels, pressurized line and fittings, pyrotechnic devices, material compatibility, material flammability, etc.

AGREED.

3.3.6.1.4 Control of functions resulting in critical hazards.

3.3.6.1.4.1 Inadvertent operation resulting in a critical hazard.

A function whose inadvertent operation could result in a critical hazard (See 6.2) shall be controlled by two independent inhibits, whenever the hazard potential exists. Compliance with this requirement may be accomplished at the End Item level or through a combination of hazard controls at the Segment/System levels.

AGREED.

3.3.6.1.4.2 Loss of a function resulting in a critical hazard.

Where loss of a function could result in a critical hazard, no single credible failure (see 6.2) shall cause loss of that function and the function shall be monitored and controlled in accordance with ISS capabilities ”Monitor System Status” (paragraph 3.2.1.1.1.7) and ”Respond to Loss of Function” (paragraph 3.2.1.1.1.4). Compliance with this requirement may be accomplished at the End Item level or through a combination of hazard controls at the Segment/System levels.

AGREED.

3.3.6.1.5 Control of functions resulting in catastrophic hazards.

3.3.6.1.5.1 Inadvertent operation resulting in a catastrophic hazard.

Compliance with requirements a, b, and c may be accomplished at the End Item level or through a combination of hazard controls at the Segment/System levels.

a. A function whose inadvertent operation could result in a catastrophic hazard shall be controlled by a minimum of three independent inhibits (See 6.2), whenever the hazard potential exists.

b. The return path for the function circuit shall be interrupted by one of the required inhibits if the design of the function circuit without the return path inhibit in place is such that a single credible failure between the last power side inhibit and the function (e.g., a single short to power) can result in inadvertent operation of the catastrophic hazardous function.

c. At least two of the three required inhibits shall be monitored.

AGREED.

3.3.6.1.5.2 Loss of function resulting in a catastrophic hazard.

Compliance with the requirements a and b may be accomplished at the End Item level or through a combination of hazard controls at the Segment/System levels.

a. If loss of the function could cause a catastrophic hazard, no two credible failures shall cause loss of that function.

b. The function shall be monitored and controlled in accordance with ”Monitor system status’ (paragraph 3.2.1.1.1.7) and ”Respond to loss of function” (paragraph 3.2.1.1.1.4).

AGREED.

3.3.6.1.6 Subsequent induced loads.

If a component of the RS is deployed, extended, or otherwise unstowed to a condition where it cannot withstand subsequent induced loads, there shall be one or two–failure tolerant design provisions to safe the RS component appropriate to the hazard level. Safing may include deployment, jettison, or provisions to change the configuration of the RS component to eliminate the hazard.

AGREED.

3.3.6.1.7 Safety interlocks.

Equipment access doors or covers shall incorporate interlocks (See 6.2) to remove all potentials in excess of 200 volts when open.

AGREED.

3.3.6.1.8 Environmental compatibility.

RS functions shall be certified see (6.2) in the worst case natural and induced environments.

AGREED.

3.3.6.1.9 Redundant functions.

Redundant functions that are required to prevent a hazardous event shall be separated to eliminate single failure points from affecting more than one redundant function.

AGREED.

3.3.6.2 Hazard detection and safing.

3.3.6.2.1 Safing prior to return/resupply/refurbishment.

The RS shall incorporate the capability to return systems which are hazardous to a safe condition and to confirm safing prior to being returned, resupplied, or refurbished.

AGREED.

3.3.6.2.2 Monitors.

3.3.6.2.2.1 Status information.

Monitoring circuits shall be designed such that the information is related to the status of the monitored device without compromising or reducing the safety of that monitored device.

AGREED.

3.3.6.2.2.2 Hazardous function operation prevention.

Monitor circuits shall be current limited or otherwise designed such that credible failures, such as a short circuit, will not operate the hazardous function.

AGREED.

3.3.6.2.2.3 Loss of input or failure.

Loss of input or failure of the monitor shall cause a change in the state of the indicator.

AGREED.

3.3.6.2.2.4 Launch site availability.

For RS elements transported by the Orbiter, monitoring shall be available to the launch site when necessary to assure safe ground operations.

AGREED.

3.3.6.2.2.5 Flight crew availability.

Notifications of changes in the status of safety monitoring shall be available to the flight crew in either near real–time or real–time monitoring.

AGREED.

3.3.6.2.3 Near real–time monitoring.

Near real–time monitoring (See 6.2) of inhibits shall be required for systems with potential hazardous functions that are not real–time monitored. Failure reporting will be in accordance with the ISS capability, ”Respond to Loss of Function” (paragraph 3.2.1.1.1.4). The frequency of monitoring is generally the lowest available with normal telemetry, but will be determined on a case–by–case basis depending on the time to effect of the hazard.

AGREED.

3.3.6.2.4 Real–time monitoring.

3.3.6.2.4.1 Maintain status of hazard controls.

The RS shall provide real–time monitoring (See 6.2) to catastrophic hazardous functions to maintain status of hazard controls when the crew or RS is performing a task required for a hazard control. When real–time monitoring is required only for crew involved operations, local visual indicators (including switch talkbacks) are acceptable monitors.

AGREED.

3.3.6.2.4.2 Crew response time and safing procedures.

If the crew is used to provide an operational control to a hazard, adequate crew response time to avoid hazard occurrence and acceptable safing procedures shall be required.

AGREED.

3.3.6.2.4.3 Ground monitoring.

If only ground monitoring is used to meet real–time monitoring, the design shall provide for safing within time to effect of the hazard upon loss of communications with the ground.

AGREED.

3.3.6.3 Command and computer control of hazardous functions.

3.3.6.3.1 Computer control of hazardous functions.

Computer control of hazardous functions with specific hardware and software safety implementation requirements shall be in accordance with the requirements of SSP 50094, section 9.0.

AGREED.

3.3.6.3.1.1 Detection and recovery.

A computer–based control system shall be designed such that a failure or operator error shall be detected, isolated and recovered from such that catastrophic and critical hazardous events are prevented from occurring.

AGREED.

3.3.6.3.1.2 Independent safing action.

A computer–based control system shall be designed such that the detection of a failure that could cause a hazard shall result in an independent safing action (See 6.2).

AGREED.

3.3.6.4 Hazardous materials.

3.3.6.4.1 Hazardous fluid containment failure tolerance.

Toxic or hazardous chemicals/materials shall have failure tolerant containment appropriate to the hazard level or be contained in an approved pressure vessel as specified in SSP 50094, section 7.0.

Where pressure regulators, relief devices, and/or thermal control system (e. g., heaters) are used to control pressure, they shall collectively be two fault tolerant from causing the pressure to exceed the Maximum Design Pressure of the system, when such exceedances cause catastrophic hazards.

The maximum design pressure is defined as the nominal operating pressure of the system plus any pressure transients, instrumentation measurement tolerances, and thermal effects.

AGREED.

3.3.6.5 Pyrotechnics for RS applications.

The pyrotechnic functions used in applications on RS shall be designed in accordance with the electromagnetic compatibility requirements in SSP 50094, paragraph 3.4.7.

3.3.6.6 Radiation.

3.3.6.6.1 Reserved.

3.3.6.6.2 Nonionizing radiation.

a. The RS shall limit the levels of nonionizing radiation of the RS in accordance with SSP 50094, paragraph TBD.

b. RS transmitters shall not irradiate the Orbiter at levels exceeding the allowable limits as specified in Figure 9, Allowable Payload to Orbiter Intentional Electrical Field Strength. A two fault tolerant combination of pointing controls or independent inhibits to transmission may be used to prevent hazardous irradiation of the Orbiter. The inhibits to prevent radiation do not require monitoring unless the predicted radiation levels exceed Orbiter limits by more than 6 decibels (dB) in which case two of three inhibits must be monitored.

AGREED.

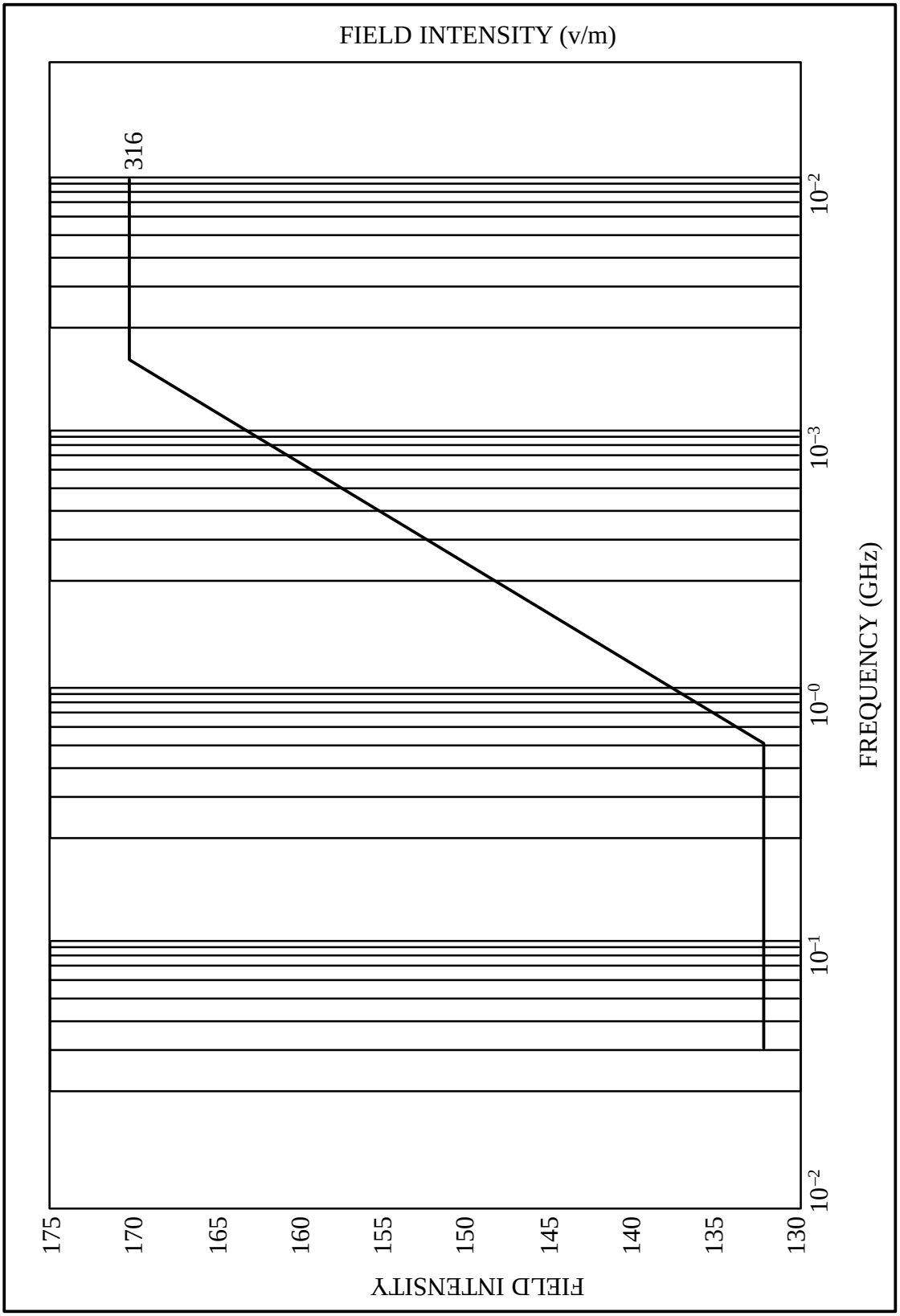

FIGURE 9. Allowable payload to Orbiter intentional electric field strength in the cargo bay

3.3.6.6.3 Spacesuit electric field radiation.

RS system shall not expose the NASA EVA suit to electric field emissions beyond the frequency and power levels specified by Figure 9–A.

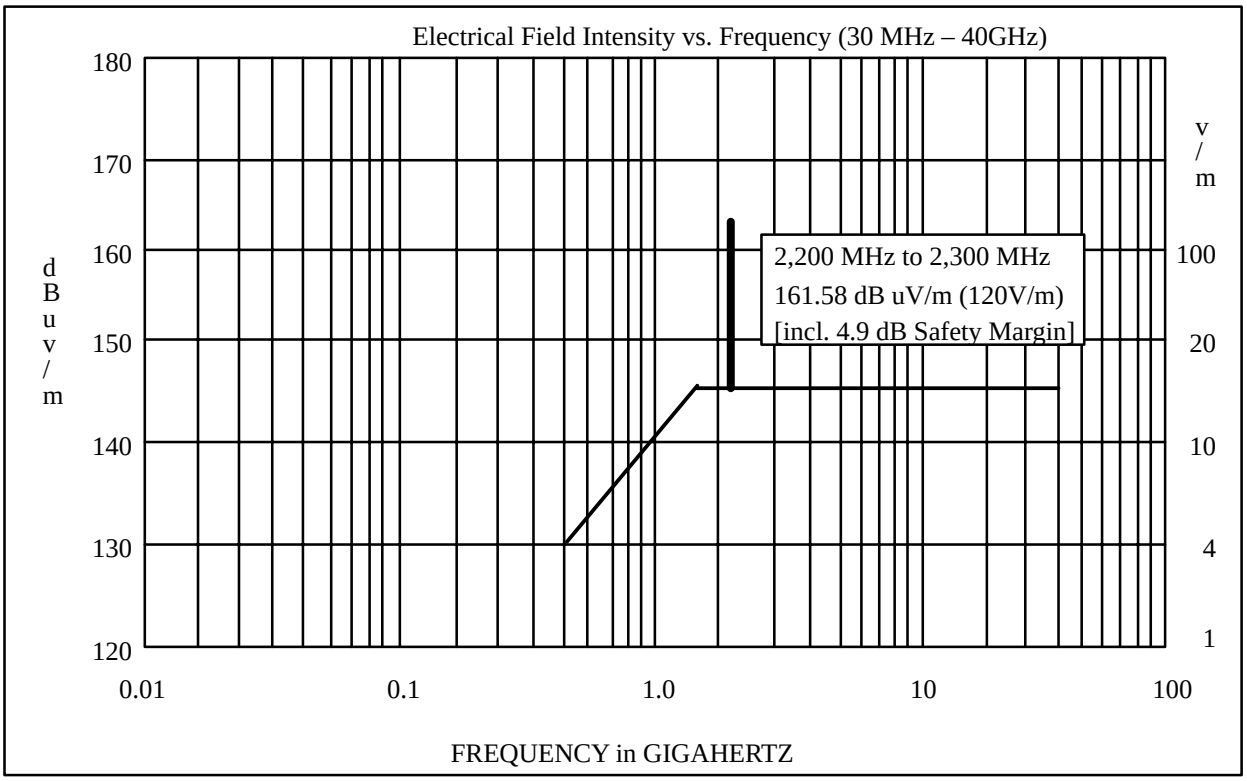

FIGURE 9–A. Maximum permitted RF exposure on the EMU

AGREED.

3.3.6.6.4 Spacesuit magnetic field radiation.

RS system shall not expose the NASA EVA suit to magnetic field emissions above 63 gauss.

AGREED.

3.3.6.7 Optics and lasers.

3.3.6.7.1 Lasers.

Lasers used on RS shall be in accordance with TBD.

AGREED.

3.3.6.7.2 Optical requirements.

3.3.6.7.2.1 Optical instruments.

Optical instruments shall prevent harmful light intensities and wavelengths from being viewed by operating personnel.

AGREED.

3.3.6.7.2.2 Personnel protection.

Quartz windows, apertures, or beam stops and enclosures shall be used for hazardous wavelengths and intensities unless suitable protective measures are taken to protect personnel form Ultraviolet or Infrared burns or X–Ray radiation.

AGREED.

3.3.6.7.2.3 Direct viewing optical systems.

Light intensities and spectral wavelengths at the eyepiece of direct viewing optical systems shall be limited to levels below the Maximum Permissible Exposure (MPE).

AGREED.

3.3.6.8 Electrical safety.

3.3.6.8.1 Electrical power circuit overloads.

3.3.6.8.1.1 Circuit overload protection.

Electrical power distribution circuitry shall include protective devices to guard against circuit overloads which could result in distribution circuit damage, excessive hazardous products in pressurized areas and to prevent damage to other safety critical circuits.

AGREED.

3.3.6.8.1.2 Protective device sizing.

Circuit protective devices shall be sized such that steady state currents in excess of the values as specified in SSP 50094, paragraph 6.5.1 are precluded.

AGREED.

3.3.6.8.1.3 Bent pin or conductive contamination.

RS electrical design shall ensure that shorts between any pin within a connector that could be caused by a pin bent prior to or during connector mating cannot invalidate more than one inhibit to a hazardous function. Conductive contamination as a similar cause shall be precluded.

AGREED.

3.3.6.8.2 Crew protection for electrical shock.

The crew shall be protected from electrical hazards in accordance with SSP 50094, paragraphs 6.5.1.14 through 6.5.1.15.2.5.

AGREED.

3.3.6.8.2.1 EVA crew protection for electric shock.

External electrical connections shall not be powered with the possibility of EVA crew contact. At least two verifiable inhibits are required to verify isolation prior to mating and demating each connector.

AGREED.

3.3.6.8.3 Re application of power.

The RS shall provide local control (See 6.2) of interruption and reapplication of power to each IVA maintenance area.

AGREED.

3.3.6.8.4 Batteries.

RS batteries which can pose a hazard shall be designed in accordance with SSP 50094, section 5.0.

AGREED.

3.3.6.9 Liquid propellant propulsion systems.

3.3.6.9.1 Inadvertent engine firings.

The design and operations of RS propellant systems shall be constrained by the hazardous consequences of inadvertent engine firings. The consequences of engine firings are dependent upon many factors such as the propellant, plume impingement effects (i.e., contamination, heat flux, loads and moments imparted on the ISS or other space vehicles while docked or in approach corridors), operations being conducted in proximity to the thrusters, collision potential, etc. As a minimum the requirements of paragraphs 3.3.6.1.4.1 and 3.3.6.1.5.1 apply to the control of inadvertent engine firings.

AGREED.

3.3.6.9.1.1 Propellant flow control devices.

The propellant delivery system in RS liquid propellant thruster systems shall contain a minimum of two mechanically independent flow control devices in series to prevent engine firing, or expulsion of propellant through the thrust chambers (i.e., at least one isolation valve that separates the propellant tanks from the remainder of the distribution system, and a thruster valve). In bi–propellant systems, the minimum number of devices apply to both the oxidizer and fuel sides.

AGREED.

3.3.6.9.1.1.1 Thruster valves.

The thruster valves in RS liquid propellant thruster systems shall be designed to return to the closed position in the absence of an opening signal.

AGREED.

3.3.6.9.1.1.2 Operations.

A minimum of two mechanical flow control devices between the propellant tank and a thruster shall be in the closed position, whenever firing of the thruster could result in catastrophic consequences. If the design of the propellant system is such that the effects of firing some thrusters are non hazardous and others are hazardous, the non–hazardous thrusters may be fired provided the appropriate mechanical flow control devices are closed and the appropriate number of electrical inhibits are in place for the hazardous thrusters.

AGREED.

3.3.6.9.1.2 Electrical inhibits.

The minimum number of independent electrical inhibits to prevent inadvertent firing of a thruster shall be consistent with the hazardous consequences as defined in paragraphs 3.3.6.1.4.1 and 3.3.6.1.5.1. One of the electrical inhibits must control the opening of the isolation valve whenever inadvertent firing would result in catastrophic consequences.

AGREED.

3.3.6.9.1.3 Monitoring of electrical inhibits to prevent catastrophic thruster firing.

At least two of the three electrical inhibits to prevent a catastrophic thruster firing shall be monitored with one of those monitors being related to the status of the isolation valve.

AGREED.

3.3.6.9.2 Propellant overheating.

The RS propulsion system components (e.g., heaters, valve coils, etc.) that are capable of heating the propellant above the material/fluid compatibility limits of the system shall be two failure tolerant to overheating.

AGREED.

3.3.6.9.3 Propellant leakage.

Mechanical fittings in RS propulsion systems shall contain at least two seals to prevent leakage of propellant into the on–orbit environment.

AGREED.

3.3.6.9.4 Reserved.

3.3.6.9.5 Plume impingement.

The RS shall be able to maintain attitude control of the ISS and prevent hazardous thruster impingement on the Orbiter or the servicing spacecraft.

AGREED.

3.3.6.9.6 Hazardous venting.

RS propulsion system vents (i.e., relief valves, turbo pump assemblies, etc.) shall perform the venting function without causing an additional hazard to the ISS Orbiter, or a servicing vehicle.

AGREED.

3.3.6.9.7 Monitoring propulsion system status.

The RS shall provide data related to pressure, temperature, and quantity gauging of RS propulsion system tanks, components, and lines to ISS to monitor system health and safety.

AGREED.

3.3.6.9.8 The RS motion control system.

The RS motion control system shall perform attitude control and reboost functions (when the ATV is docked to the SM, the RS shall send the commands necessary to support this requirement but, its successful execution is the responsibility of the ATV) without inducing loads which exceed the design limit loads specified in SSP 42121 ICD, paragraph 3.2.1.7.4.1.

3.3.6.10 Fire protection.

3.3.6.10.1 Manual activation.

The RS shall have the capability for crew initiated notification of a fire event within 1 minute after crew detection.

AGREED.

3.3.6.10.2 Isolation.

The RS shall ensure that isolation of a fire event does not cause loss of functionality which may create a catastrophic hazard.

AGREED.

3.3.6.10.3 Suppression.

The RS shall accommodate the application of a fire suppressant at each enclosed location containing a potential fire source.

AGREED.

3.3.6.10.4 Suppressant.

3.3.6.10.4.1 Suppressant material.

Fire suppressant shall be compatible with Space Station life support hardware.

AGREED.

3.3.6.10.4.2 Toxicity level.

The fire suppressant shall not exceed 1 hour SMAC levels in any isolated elements as given in Table V and shall be non–corrosive.

AGREED.

3.3.6.10.5 Contamination.

Fire suppressant by–products shall be compatible with the space station contamination control capability.

AGREED.

3.3.6.10.6 Portable equipment.

3.3.6.10.6.1 Proximity to entrance.

One PBA and one PFE shall be located in elements less than or equal to twenty–four (24) feet in accessible interior length.

AGREED.

3.3.6.10.6.2 Location within element.

Where the element exceeds twenty four (24) feet in accessible interior length, a set of PBAs and PFEs shall be located within twelve (12) feet of each end of the element.

AGREED.

3.3.6.10.6.3 Set co–location.

At least one PBA shall be located within three (3) feet of each PFE.

AGREED.

3.3.6.11 Constraints.

3.3.6.11.1 Pressurized volume depressurization and repressurization tolerance.

3.3.6.11.1.1 Hazards During Depressurization.

Pressurized volume depressurization and repressurization tolerance.

RS equipment located in pressurized volumes shall be capable of withstanding the differential pressure of depressurization, repressurization, and the depressurized condition without resulting in a hazard or failure propagation.

Equipment required to function during depressurization or repressurization shall be designed to operate without producing arcing or other hazards.

AGREED.

3.3.6.11.2 Emergency egress.

The RS shall provide for safe emergency IVA egress to the remaining contiguous pressurized volumes and have the capability to isolate from other flight pressurized volumes within 3 minutes, including closing hatches.

AGREED.

3.3.6.11.3 Translation entry/exit paths.

Compartment and pressurized volume entry/exit paths shall not be impeded. (see 6.2)

AGREED.

3.3.6.11.4 Component hazardous energy provision.

Components which retain hazardous energy potential after the component is turned off, shall be designed to prevent a crewmember conducting maintenance from contacting the energy potential or shall be designed with provisions to allow safing of the potential energy, including provisions, to confirm that the safing was successful.

AGREED.

3.3.6.11.5 Hatch opening.

a. The RS shall monitor total pressure and temperature inside the elements during all flight phases.

b. The RS shall assure toxologically safe atmosphere prior to entry into any enclosed, isolated pressurized habitable volume.

AGREED.

3.3.6.11.6 Hatch operations.

Hatches designed to be operated on–orbit interfacing directly to space vacuum shall be self–sealing (inward opening).

AGREED.

3.3.6.11.7 Pins or detachable parts.

Any detachable parts shall be capable of being restrained or tethered.

AGREED.

3.3.6.11.8 Single crewmember entry/exit.

Hatches shall be operable from either side by a single crewmember.

AGREED.

3.3.6.11.9 Reserved.

3.3.6.11.10 Equipment clearance for entrapment hazard.

Clearance shall be provided for equipment removal and replacement to prevent the creation of a crew entrapment hazard.

AGREED.

3.3.6.11.11 Light fixture.

Light fixtures shall be protected by impact proof plastic diffusers which shall contain all potential glass fragments in the case of lamp breakage. The use of special purpose light fixtures will be agreed to separately.

AGREED.

3.3.6.12 Human factors.

3.3.6.12.1 Internal volume touch temperature.

3.3.6.12.1.1 Continuous contact–high temperature.

Surfaces which are subject to continuous contact with crewmember bare skin and whose temperature exceeds 104 degrees Fahrenheit (40 degrees Centigrade) shall be provided with guards or insulation to prevent crewmember contact.

See 3.7.6.4.1.1 for Soyuz specific requirements.

AGREED.

3.3.6.12.1.2 Incidental or momentary contact–high temperature.

For incidental or momentary contact (30 seconds or less), the following apply:

Crewmember warning – surfaces which are subject to incidental or momentary contact with crewmember bare skin and whose temperatures are between 104 degrees F (40 degrees C) and 113 degrees F (45 degrees C) shall have warning labels that will alert crewmembers to the temperature levels.

Crewmember protection – surface temperatures which exceed 113 degrees F (45 degrees C) shall be provided with guards or insulation that prevent crewmember contact.

AGREED.

3.3.6.12.1.3 Internal volume low touch temperature.

When surfaces below 41 degrees F (5 degrees C) which are subject to continuous or incidental contact, are exposed to crewmember bare skin contact, protective equipment shall be provided to the crew and warning labels shall be provided at the surface site.

See 3.7.6.4.1.2 for Soyuz specific requirements.

AGREED.

3.3.6.12.2 External touch temperature for U.S. EVA.

The suit shall be protected from high or low touch temperature extremes as follows:

a. For incidental contact, maintain temperatures within –117 to +113 degrees C (–178.6 to +235.4 degrees F).

b. For unlimited contact within designated EVA crew interface areas as specified in Table XIII and maintain temperatures within –43 to +63 degrees C (–45.4 to +145.4 degrees F).

AGREED.

TABLE XIII. Designated extravehicular activity interfaces

EVA tools and support equipment
EVA translation aids (e.g. CETA cart, handrails, handholds, etc.)
EVA restraints (foot restraints, tethers, tether points etc.)
All EVA translation paths (handrails or structure identified for use as a translation path
All surfaces identified for operating, handling, transfer, or manipulation of hardware
EVA stowage
EVA work site accommodations (handholds, APFR ingress aids, EVA lights, etc.)
EVA ORU handling and transfer equipment

3.3.6.12.3 External edge, corner, and protrusion radii.

a. RS equipment, structures along translation routes, worksite provisions, and each equipment item requiring an EVA interface shall provide rounded corners and edges or edge guards in accordance with Table XIV.

TABLE XIV. Edge, corner, and protrusion criteria – edge and in–plane corner radii (1)

Application		Radius				Remarks
		Outer		Inner		
		in.	mm	in.	mm	
(a)	Openings, panels, covers (corner radii in plane of panel)	0.25 0.12	6.4 3.0	0.12 0.06	3.0 1.5	Preferred Minimum
(b)	Exposed corners:	0.50	13.0			Minimum
(c)	Exposed edges: (1) 0.08 in. (2.0 mm) thick or greater (2) 0.02 to 0.08 in. (0.5 to 2.0 mm) thick (3) less than 0.02 in. (0.5 mm) thick	0.04</=1.0 Full Radius Rolled or Curled		– 	–	Minimum
(d)	Small hardware operated by the pressurized–gloved hand	0.04	1.0	–	–	Minimum required to prevent glove snagging
(e)	Small protrusions (less than approximately 3/16 in. (4.8mm)	0.04	1.0	–	–	Absolute minimum unless protruding corner is greater than 120 degrees

NOTE:
(1) A 45 degree chamfer by 0.06 inches (1.5 mm) (minimum) with smooth broken edges is also acceptable in place of a corner radius. The width of chamfer should be selected to approximate the radius corner described above.

b. External RS equipment that will go into a pressurized volume for planned maintenance or storage shall meet the requirements specified in paragraph 3.3.6.12.4.

AGREED.

3.3.6.12.4 IVA internal corner and edge protection.

RS equipment exposed to crew during nominal activity and planned maintenance activity shall be designed to protect the crew from injury by having a minimum of 0.039 inch (1 mm) radius or chamfered edges and corners.

AGREED.

3.3.6.12.5 Reserved.

3.3.6.12.6 Latches.

3.3.6.12.6.1 Design.

Latches or similar devices shall be designed to prevent entrapment of crewmember appendages.

AGREED.

3.3.6.12.6.2 Protective covers or guards.

A protective cover or guard shall be used where suitable substitutes cannot be found.

AGREED.

3.3.6.12.7 Screws and bolts.

Screws or bolts with exposed threads protruding greater than 0.078 inches (2 mm) shall have protective features which include protective covers or rounded edges per 3.3.6.12.4 and that do not prevent installation or removal of the screw or bolt.

AGREED.

3.3.6.12.8 Safety critical fasteners.

Safety critical fasteners shall be designed to prevent their inadvertent back out.

AGREED.

3.3.6.12.9 Levers, cranks, hooks and controls.

Levers, cranks, hooks and controls shall be located such that they cannot pinch, snag, cut, or abrade the crewmembers or their clothing.

AGREED.

3.3.6.12.10 Burrs.

Exposed surfaces shall be smooth and free of burrs.

AGREED.

3.3.6.12.11 Reserved.

3.3.6.12.12 Protrusions.

Equipment except for translation aids identified in Table XIII shall not protrude into the 1 meter (39.4 inches) cylindrical envelope of the primary and secondary translation path.

AGREED.

3.3.6.12.13 Pinch points.

Equipment located outside the habitable volume which pivot, retract, or flex such that a gap of less than 1.4 inches exists between the equipment and adjacent structure shall be designed to prevent entrapment of EVA crewmember appendages.

AGREED.

3.3.6.12.14 Emergency ingress for a non–impaired crew member.

The RS shall provide conditions for emergency ingress into the airlock of a non–impaired crew member within 30 minutes.

AGREED.

3.3.6.12.15 Flex hoses, lines, and cables.

All flex hoses, lines, and cables shall be tethered or otherwise captured to prevent injury to crew and damage to adjacent hardware.

AGREED.

3.3.6.12.16 Translation routes and established worksites.

3.3.6.12.16.1 Primary translation routes and established worksites.

a. Primary translation routes and established worksites shall not pose a risk to EVA crew.

b. External hardware, exposed to the EVA crew along the primary translation route and established worksites, shall not be sensitive to EVA loads up to 50 kg (125 lbs).

AGREED.

3.3.6.12.16.2 Secondary translation routes and established worksites.

External hardware along secondary translation routes and established work sites posing a risk to EVA crew shall be placarded (See 6.2) and controlled as specified in Table XV.

AGREED.

TABLE XV. External hardware placards and controls

RISK TYPE	HAZARD	CONTROL METHOD
Innate Characteristics	Non–Ionizing Radiation (Antenna transmit at 15 GHz)	Warning Strips and Placards
	Retract/Rotating Parts	Warning Strips and Placards
	Propulsion/Thrusters	Warning Strips and Placards
	Electrical/Contactors	Warning Strips and Placards
	Thermal (>235F, or <–180F for 0.5 sec)	Warning Strips and Placards
	Stored Energy Devices/Pyrotechnics	Warning Strips and Placards

TABLE XV. External hardware placards and controls – Continued

RISK TYPE	HAZARD	CONTROL METHOD
	Venting of Corrosives	Warning Strips and Placards
By Design	Sharp Edges/Corners	Placards
	Narrow Passageways Protrusions	Placards
	Structures Sensitive to EVA Loads	Placards
	Pinch Points	Placards
	Non–corrosive Contaminants	Placards
	Abrasion Areas	Placards

3.3.6.12.16.3 EVA crewmember contact isolation.

RS hardware with EVA contact hazards which cannot be controlled by design shall be isolated to preclude EVA crewmember contact.

AGREED.

3.3.6.12.17 Moving or rotating equipment.

The EVA crewmember shall be protected from moving or rotating equipment.

AGREED.

3.3.6.13 Launch vehicle transport – Space Shuttle launch.

The following requirements in section 3.3.6.13 apply only to RS hardware that will be launched on the Space Shuttle:

AGREED.

3.3.6.13.1 Space Shuttle services.

3.3.6.13.1.1 Fault tolerance/safety margins.

The RS shall have the capability to maintain fault tolerance or established safety margins consistent with the hazard potential without ground or flight services from the Space Shuttle Program.

AGREED.

3.3.6.13.1.2 Termination of services due to Orbiter emergency conditions.

During Orbiter emergency conditions, RS shall have the capability to achieve and confirm a safe condition within 15 minutes upon notification from the Orbiter to terminate services.

AGREED.

3.3.6.13.2 Critical Orbiter services.

When Orbiter services are to be utilized to control RS hazards, the integrated system shall meet the requirements specified in 3.3.6.1.1 Catastrophic hazards, 3.3.6.1.2 Critical hazards, 3.3.6.1.4, Control of critical hazardous functions and 3.3.6.1.5 Control of catastrophic hazardous functions.

AGREED.

3.3.6.13.3 Inadvertent deployment, separation, and jettison functions.

Inadvertent deployment, separation or jettison of RS hardware or an appendage to that hardware which could result in a collision with the Orbiter or an inability to withstand subsequent loads shall be one or two failure tolerant consistent with the hazard level in accordance with paragraphs 3.3.6.1.1 and 3.3.6.1.2. The general inhibit and monitoring requirements of paragraphs 3.3.6.1.4, 3.3.6.1.5, 3.3.6.2.2, 3.3.6.2.3, and 3.3.6.2.4 apply.

AGREED.

3.3.6.13.4 Planned deployment/extension functions.

3.3.6.13.4.1 Violation of Orbiter payload door envelope.

If a component of the RS or any RS orbital support equipment violates the Orbiter payload bay door envelope, the hazard of preventing door closure shall be controlled by independent primary and backup methods. Two methods are considered independent if no single event or environment can eliminate both methods (i.e., the methods have no common cause failure mode).

AGREED.

3.3.6.13.4.2 Method of fault tolerance.

The combination of the primary and backup methods to clear the Orbiter payload door envelope shall be two–failure tolerant.

AGREED.

3.3.6.13.5 Contingency return and rapid safing.

The RS shall be designed such that it does not preclude the Orbiter from safing the Orbiter payload bay for door closure and deorbit, when emergency conditions develop.

The RS cargo element shall have a single failure tolerant capability to allow the Orbiter to start closing the payload bay doors within 1 hour and 35 minutes.

AGREED.

3.3.6.13.6 Flammable atmosphere.

During Orbiter entry, landing, and postlanding operations (whether planned or contingency), the normal (no failures) RS functions shall not cause ignition of a flammable payload bay atmosphere.

AGREED.

3.3.6.13.6.1 Reserved.

3.3.6.13.6.2 Electrical ignition sources.

Electrical ignition sources shall not be exposed.

AGREED.

3.3.6.13.6.3 Surface temperatures.

Surface temperatures shall be below 352 degrees F (177.7 degrees C).

AGREED.

3.3.6.13.6.4 Conductive surfaces.

Conductive surfaces (including metalized MLI layers) shall be electrostatically bonded as specified in SSP 50094, paragraph 3.4.

AGREED.

3.3.6.13.7 Allowable RF radiation levels.

RS transmitters, located in or out of the Orbiter payload bay, which have the capability to emit radiation levels impinging on the Orbiter exceeding the allowable limits as specified in SSP 50094, paragraph 3.4 shall require three independent inhibits to prevent inadvertent transmission. For transmitters located in the Orbiter payload bay, no radiation is permitted when the payload bay doors are closed. Inhibits are not required when there is no physical connection to the transmitter power source. The inhibits to prevent inadvertent radiation do not require monitoring unless the predicted radiation levels as specified in SSP 50094, paragraph 3.4 exceed the limits by more than 6 decibels (dB) in which case two of three inhibits must be monitored.

AGREED.

3.3.6.13.8 Lightning protection.

RS electrical circuits may be subjected to the electromagnetic fields described in NASA/RSC–E/3411–SSP para 10.3.1.1.2, due to a lightning strike to the launch pad. If circuit upset could result in a catastrophic hazard to the STS, the circuit design shall either be hardened against the environment or insensitive devices (relays) added to control the hazard.

AGREED.

3.3.6.13.9 Orbiter vent/dump provisions.

3.3.6.13.9.1 Release or ejection of hazardous materials.

RS hazardous materials shall not be released or ejected which present a hazard to the Orbiter or ISS.

AGREED.

3.3.6.13.9.2 Fluid system containment.

RS hazardous or nonhazardous fluid systems shall contain the fluids unless the use of the Orbiter vent/dump provisions has been negotiated with the Space Shuttle Program Office.

AGREED.

3.3.6.13.10 Sealed compartments.

RS components, located in regions of the Orbiter other than the habitable volume shall be designed to withstand the decompression and recompression environments associated with ascent and descent without resulting in a hazard.

AGREED.

3.3.6.14 Ground interfaces and services – Space Shuttle launch.

Hazards shall not be created due to the inaccessibility of RS flight hardware such as the following:

AGREED.

3.3.6.14.1 Moving parts.

Moving parts such as fans, belt drives, turbine wheels, and similar components that could cause personnel injury or equipment damage due to inadvertent contact or entrapment of floating objects shall be provided with guards or other protective devices.

AGREED.

3.3.6.14.2 Equipment requiring adjustment.

Equipment requiring adjustment during its operation shall have external adjustment provisions and provide electrical shock protection when applicable.

AGREED.

3.3.6.14.3 Ignition of adjacent materials.

Electrical equipment shall not cause ignition of adjacent materials.

AGREED.

3.3.6.14.4 Accidental contact with electrical equipment.

Electrical equipment shall be designed to provide personnel protection from accidental contact with alternating current (AC) voltages in excess of 30 volts root mean square (rms) or 50 volts direct current (DC) or any lower voltage that could cause injury.

AGREED.

3.3.6.15 Ground interfaces and services – Russian launch vehicle.

RS shall use RS ground processing specifications.

AGREED.

3.3.6.16 Ground support equipment safety requirements for SS launch of RS hardware.

The RS ground support equipment designated to be processed at the Space Shuttle launch site shall be in accordance with SSP 50146, Appendix A.

AGREED.

3.3.7 Human engineering.

3.3.7.1 Anthropometric requirements.

RS hardware, except external systems, shall accommodate anthropometric size measurements in accordance with SSP 50094, paragraph 6.1.

Workstations shall be sized to meet the functional reach limits in accordance with SSP 50094, paragraph 6.1

AGREED.

3.3.7.2 External task location requirements.

Dedicated EVA worksites shall be outfitted in accordance with Figure 10. RS equipment, controls, displays, and markings required to be seen to perform EVA tasks shall be located within the field of view of the space suit as defined in Figure 11.

AGREED.

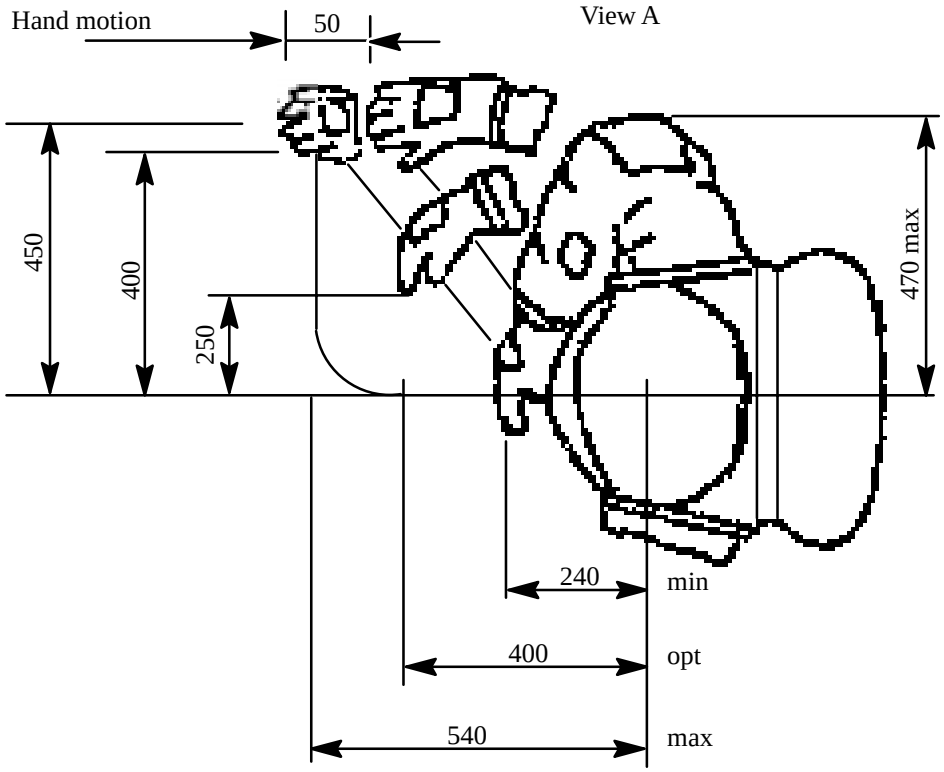

FIGURE 10. Crewmember work envelope (dimensions in mm)

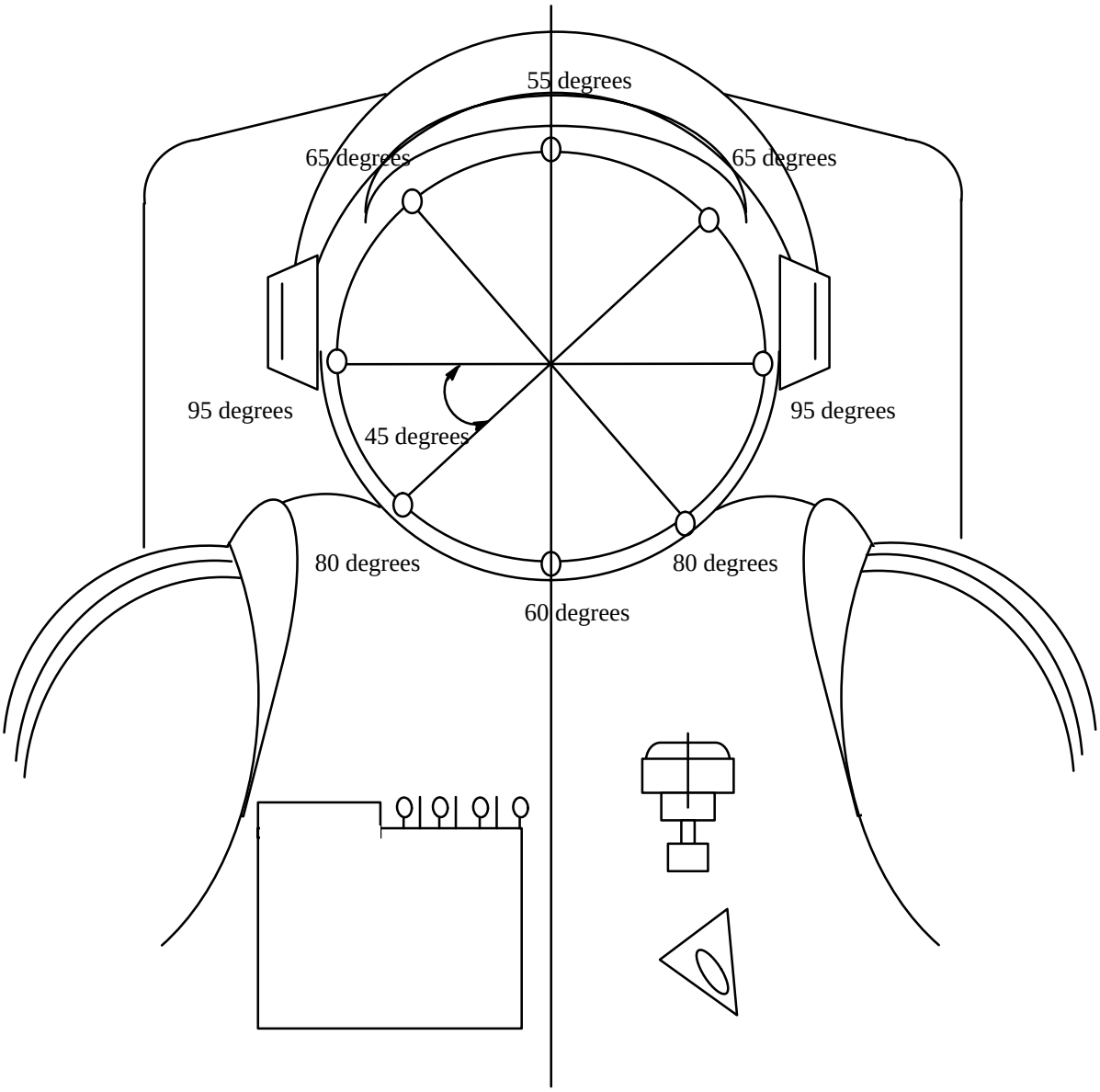

FIGURE 11. Spacesuit helmet field of view

3.3.7.3 Strength requirements.

3.3.7.3.1 Normal operations.

Components of RS hardware that will have a crew interface under normal operations shall accommodate strength limitations in accordance with SSP 50094, paragraph 6.2.

AGREED.

3.3.7.3.2 Maintenance.

Internal components of RS hardware that will have a crew interface for maintenance only shall accommodate strength limitations in accordance with SSP 50094, paragraph 6.2.

AGREED.

3.3.7.3.3 Emergency controls.

Emergency controls, hardware required for crew translation and emergency egress, and hardware for which time critical access is required shall be designed to accommodate strength limitations in accordance with SSP 50094, paragraph 6.2.

AGREED.

3.3.7.4 Gloved operation.

Controls necessary for repressurization following depressurization shall be operable by a pressure–suited crew member. Clearance for an EVA gloved hand shall be designed as shown in Figure 12.

AGREED.

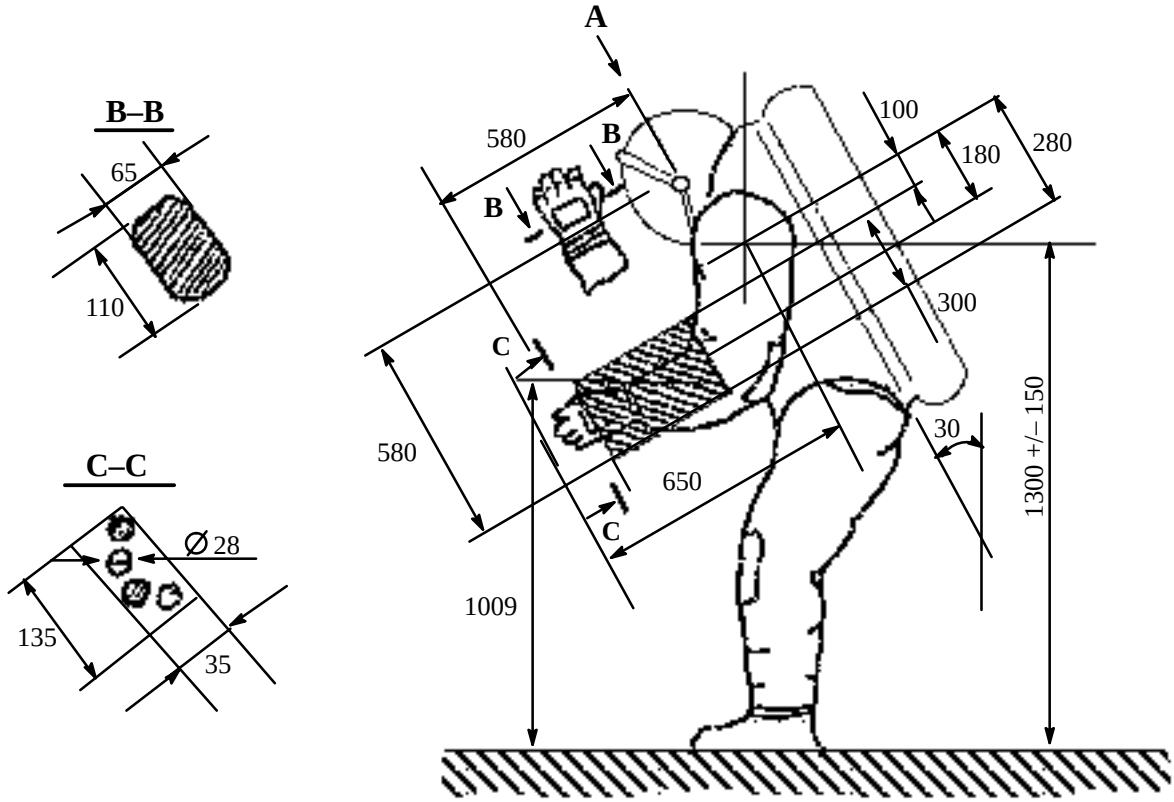

FIGURE 12. Crewmember work envelope (gloved hand) (dimensions in mm)

3.3.7.5 Location coding.

3.3.7.5.1 Alphanumeric coding.

The RS on–orbit label code shall have a single consistent alphanumeric coding standard, in accordance with SSP 50094 paragraph 6.4.7 for designating locations across the entire RS.

AGREED.

3.3.7.5.2 Accommodate changes.

The RS shall have a coding system that accommodates changes to the International Space Station configuration.

AGREED.

3.3.7.5.3 Reserved.

3.3.7.5.4 EVA primary translation path.

The EVA primary translation path will be marked to indicate the return direction to the pressurized volume.

AGREED.

3.3.7.6 Housekeeping.

The RS modules shall be designed to facilitate housekeeping in accordance with SSP 50094, paragraphs 6.3.3.1.5, 6.4.1, and 6.4.6.

AGREED.

3.3.8 Reserved.

3.3.9 System security.

The RS shall provide privacy for audio communications on the uplink/downlink, and protection for uplinked commands to prevent unauthorized third party control of the on–orbit station.

AGREED.

3.3.10 Environmental constraints.

3.3.10.1 Acoustic emission limits.

The integrated acoustic environment in habitable areas shall not exceed SSP 50094, paragraph 6.5.2 criterion for noise sources averaged over any 10 second time interval. This requirement does not apply during alarm or warning conditions.

AGREED.

3.3.10.2 External contamination releases.

Releases of contaminants from the exterior of the RS shall be in accordance with SSP 50094, paragraph 3.3.4.1.

AGREED.

3.3.11 Design for remote controlled external operations.

The FGB shall provide grapple fixture interface capability to accommodate National Space Transportation System (NSTS) grapple fixture interface and in accordance with SSP 42121 ICD, Appendix C.

AGREED.

3.3.11.1 Shuttle Remote Manipulator System (SRMS) robotic support of the SPP.

a. The SPP shall have the SRMS Grapple Fixture (GF) positioned in accordance with NASA/RSC–E/3411–SPP, paragraph 5.1.1 and 5.1.1.2.

b. The SPP shall meet its performance requirements after being subjected to the impulse load at the grapple fixture to SPP interface as specified in NASA/RSC–E/3411–SPP, paragraph 5.1.4.

c. Reserved.

d. The SPP shall meet its performance requirements after being subjected to the load cases show in NASA/RSC–E/3411–SPP, paragraph 5.1.3.1.

e. The SPP shall have the vibration frequency as specified in NASA/RSC–E/3411–SPP, paragraph 5.1.3.3.

f. The SPP shall provide the electrical bonding interfaces to the SRMS GF in accordance with NASA/RSC–E/3411–SPP, paragraph 5.1.1.3, and 5.1.2.

g. The SPP shall provide the thermal interfaces to the SRMS grapple fixture in accordance with NASA/RSC–E/3411–SPP, paragraph 5.1.5.

h. The SPP mass properties and volume constraints shall be in accordance with NASA/RSC–E/3411–SPP, attachment 1, section 2.0.

i. The SPP shall provide scuff plates that limit motion in accordance with NASA/RSC–E/3411–SPP, paragraph 5.3.

AGREED.

3.3.11.2 SRMS to SSRMS robotic hand–off.

To support robotic handoff of the SPP from the Shuttle SRMS to the SSRMS, the SPP shall locate the FRGF (SRMS GF) and Power Data Grapple Fixture (PDGF, SSRMS GF) such that there is at least one accessible interface for each robot at hand–off.

AGREED.

3.3.11.3 Space Station Robotic Manipulator Support (SSRMS) of the SPP.

a. The SPP shall maintain a minimum fundamental structural frequency as specified in SSP 50227, paragraph A.3.2.2.2.3.

b. The SPP and SM shall meet their performance requirements after being subjected to the loads and contact conditions specified in SSP 50227, paragraph A 3.2.2.2.2, E.3.4.1.1.

c. The SPP and SM shall provide capture, and interface closure drive capability to overcome the backdrive thresholds (static friction) in accordance with SSP 50227, paragraph A.3.2.2.2.2.4, and complete the berthing operation and interface sealing when the SSRMS is limp.

d. For the nominal berthing sequence the SPP shall provide the following indications to the USOS (through the SSRMS) in accordance with SSP 50097, Operation requirements are defined in SSP 50227, paragraphs E3.4.1.2, E3.4.1.3.

1. The SPP Probe is fully extended.

2. First contact signal (DK1).

3. Probe Head Capture Signal (DZG)

4. Bottom Hit Signal (DK2). Receipt of this signal begins the automatic docking procedures. Within twenty (20) seconds of DK2 signal receipt, the SSRMS will be placed in limp mode. Twenty (20) seconds following receipt of this signal, the automatic retraction of the docking mechanism begins to complete the SPP/SM hard mate docking.

e. For the nominal berthing sequence the SM shall provide the following indications to the RS crew and RSGS. (Operations requirements are defined in SSP 50227, paragraph E3.4.1.

1. Probe Head Capture passive Signal (DZG). This signal confirms probe head capture by the passive part of the docking mechanism.

2. A docking complete signal. This signal confirms successful completion of the SSP/SM interface matting test. Receipt of this signal allows to release the SSRMS and back it away from the RS.

f. Reserved

g. The SPP and SM shall support the visual targets as needed by the Canadian Space Vision System (CSVS) in accordance with SSP 50227, B3.2. (paragraph B3.2.1 – SPP interface requirements, paragraph B3.2.2 – SM interface requirements).

h. The requirements of the SM and the SPP to use the SSRMS to berth the SPP to the SM shall not exceed the existing capabilities of the SSRMS.

AGREED.

3.3.11.3.1 SPP support of the Power Data Grapple Fixture (PDGF).

a. The SPP shall accommodate a PDGF mounting ring in the location as specified in SSP 50227, paragraph A3.2.2.2.1.

b. The SPP shall provide a clearance envelope as specified in SSP 50227, paragraph A3.2.2.1.1.

c. The SPP shall provide structural/mechanical interfaces to the PDGF in accordance with SSP 50227, paragraph A3.2.2.2.2.

d. The SPP shall provide electrical interfaces to the PDGF in accordance with SSP 50227, section A.3.2.2.3.

e. The SPP shall provide C&DH interfaces to the PDGF in accordance with SSP 50227, section A3.2.2.4.

f. The SSP shall provide thermal interfaces to the PDGF in accordance with SSP 50227, section A3.2.2.5.

g. The SSP shall comply with environmental requirements in accordance with SSP 50227, section A3.2.2.6.

h. The SPP shall provide EVA interfaces in accordance with SSP 50227, section A3.2.2.7.

AGREED.

3.3.12 Design requirements.

3.3.12.1 Structural design requirements.

RS structures shall be in accordance with SSP 50094, section 7. Service life of RS structures shall be 15 years for FGB, SM, UDM, LSM, SPP, DSM, and DC2(TBR). Service life shall be 2 years for RMs, and DC1(TBR). Service life shall be 200 days for Soyuz including 5 days autonomous flight and 180 days for the Progress including autonomous flight.

AGREED.

3.3.12.1.1 Structural design life for meteoroid and orbital debris analyses.

For the purposes of conducting Meteoroid/Orbital Debris analysis the service life (exposure time) shall be 15 years except as noted in the ”Duration” column in Table XV–A.

TABLE XV–A. Structural Penetration Resistance Capability

Element	PNP Requirements	Duration (years)	Launch Date
FGB	0.979	15	Nov. 98
Service Module (as launched)	0.940	3.7	Nov. 99
Service Module (after augmentation)	0.962	11.3	Jul. 03 (1JA, 14A)
Universal Docking Module	0.979	15	Dec. 00
Docking & Stowage Module (FGB–2)	0.979	15	Feb. 02
Research Module –1	0.9883	15	Aug. 02
Research Module –2	0.9883	15	Nov. 02
Docking Compartment 1	0.996	2	Mar. 00
Docking Compartment 2	0.995 (TBR)	15	Jul. 01
SPP	0.993 (TBR)	15	Jan. 01
Progress/M, Progress/M1	0.955	3.7	Dec. 99

TABLE XV–A. Structural Penetration Resistance Capability – Continued

Progress/M, Progress/M1 (after SM augmentation)	0.991 (TBR)	11.3	Apr. 04
Soyuz	0.992 (TBR)	15	Jan. 00

AGREED.

3.3.12.1.1.1 Probability of No Penetration.

3.3.12.1.1.1.1 Structure penetration.

The elements of the RS shown in Table XV–A shall have minimum Probability of No Penetration (PNP) as shown in Table XV–A in the M/OD environment as specified in 3.2.6.1.8 beginning at the specified launch date for the specified duration.

AGREED.

3.3.12.1.1.2 Reserved.

3.3.12.1.2 EVA on–orbit induced loads.

All RS structural elements to which a safety tether hook may be attached, shall support a 100 kg limit load induced by an EVA crewmember, with a 200 kg ultimate load. Inadvertent loads on all elements with the exception of the crew restraining elements shall withstand a 50 kg load. While conducting manual operations, the linear forces shall not exceed 20 kgs and one–handed torsional moments shall not exceed 0.4 kg–meters.

AGREED.

3.3.12.1.3 Additional M/OD space protections.

The RS shall have provisions for on–orbit M/OD protection augmentation.

AGREED.

3.3.12.2 Window, glass and ceramic structural design.

Window, glass, and ceramic structural design shall be in accordance with SSP 50094, section 7.1.4.

AGREED.

3.3.12.3 Fracture control.

Fracture control for Russian Segment structures shall be performed in accordance with the Joint Fracture Control Plan as specified in SSP 50094, appendix B.

AGREED.

3.3.12.4 Structural Design Constraints.

The structural and mechanical design of the RS shall contribute no more than 1.87 degrees (3 sigma) about each axis to errors in attitude knowledge between the RS interface with the USOS and the body axes of the SM.

AGREED.

3.3.12.4.1 FGB Structural Design Constraint.

The value of angular misalignment between the FGB/PMA–1 and FGB/SM mechanical interfaces due to the manufacturing errors, temperature and pressurization induced deformations and on–orbit loads shall not exceed 0.5 degrees about each axis of the FGB coordinate axis system.

AGREED.

3.3.12.4.2 SM Structural Design Constraint.

The value of angular misalignment between the FGB/SM mechanical interfaces and the SM navigation base due to manufacturing errors, temperature and pressurization induced deformations, and on–orbit loads shall not exceed 1.80 degrees about each axis of the SM coordinate axis system.

AGREED.

3.3.12.5 Fluid handling requirements.

3.3.12.5.1 Fluid quantity determination.

A fluid quantity determination capability shall be provided in fluid storage and resupply systems.

AGREED.

3.3.12.5.2 Interface hardware.

The fluid transfer interface at the Russian Segment and U.S. Segment interface shall be in accordance with SSP 42121, paragraph 3.2.2.2.3.4.

AGREED.

3.3.12.5.3 Flexible Lines and Bellows Design.

Flexible lines and bellows shall be designed to preclude flow–induced vibration in accordance with TBR.

AGREED.

3.3.12.6 Knobs and Fasteners.

Knobs and fasteners used on removable structure and components shall be selected and designed in accordance with the following:

a. Knobs and fasteners for suited gloved hand operations shall have a minimum head diameter of 38 mm. Fasteners and knobs shall have a minimum head height of 19 mm.

b. External knobs and fasteners shall be captive or shall have special provisions to restrain the fasteners.

c. EVA actuated fasteners/devices shall be visually accessible to ensure proper seating or restraint in installed locations.

d. EVA hand actuated rotational fasteners shall be provided with a feature for contingency override with a hand tool.

AGREED.

3.3.12.7 Atmosphere leakage.

Total atmospheric leakage from the RS shall not exceed 0.044 pounds per day (0.020 kg per day). At the Russian and U.S. Segment interface, the RS atmospheric leakage shall be in accordance with SSP 42121 ICD, paragraph 3.2.2.2.6.1 and 3.2.2.2.6.2.

AGREED.

3.3.12.8 Operational Altitude.

a. For the post–assembly phase: The minimum operational altitude for the on–orbit Space Station shall be the altitude that provides 180 days of orbital decay to 150 nmi (278 km) and satisfies the quasi–steady micro–gravity requirements in paragraph 3.2.1.1.4.1.1a, except when altitude deviations are necessary to stay within the following altitude constraints:

(1) Russian crew transfer vehicle (Soyuz vehicle) maximum altitude limit of 230 nmi (425 km) for rendezvous and docking, and 248 nmi (460 Km) for deorbit;

(2) Russian cargo vehicle(s) and Service Module hardware/software maximum altitude limit of 248 nmi (460 km); and

(3) No Space Station altitude shall provide less than 90 days of orbital decay to 150 nmi (278 km).

b. For the assembly phase: the minimum operational altitude for the on–orbit Space Station shall be the altitude that provides 90 days of orbital decay to 150 nmi (278 km).

See 3.7.6.5.9.3.9 for Soyuz specific requirements.

See 3.7.7.3.25 for Cargo Vehicle specific requirements.

AGREED.

3.3.12.9 Preclude condensation.

Surfaces exposed to the cabin atmosphere shall preclude condensation of atmospheric moisture.

AGREED.

3.3.12.10 Venting/dumping.

Venting and dumping from the exterior of the RS shall be in accordance with SSP 50094, paragraph 3.3.5.2.

AGREED.

3.3.13 EVA Equipment handling capabilities.

External equipment or hardware to be handled or transported by the EVA crew shall be capable of being handled in accordance with Table XVI.

AGREED.

TABLE XVI. Maximum limits for transport of objects by a single crewmember

Object Size	Crew Translation Mode	Object Translation Mode	Object Restraint Method
0 – 9.072 kg 0 – .05664 m3 max dim: .6096 m	Both hands	Tether	Tether
9.072 – 22.68 kg .05664 – .1416 m3 max dim: 1.524 m	Both hands	Tether	Tether
9.072 – 22.68 kg .05664 – .1416 m3 max dim: 1.524 m	Both hands	Rigid Tether	Rigid Tether
22.68 – 340.2 kg .1416 – 2.832 m3 max dim: 2.4384 m	RMS/CETA	Crew on RMS/CETA	Both hands
22.68 – 204.12 kg .1416 – 2.832 m3 max dim: 2.4384 m	Crew in foot restraint	Crew hand–off from edge of crew reach envelope to edge of next crew reach envelope	Both hands
204.12 – 340.2 kg .1416 – 2.832 m3 max dim: 2.4384 m	Crew in foot restraint	Crew hand–off from .3048 m inside edge of crew reach envelope to .3048 m inside edge of next crew reach envelope	Both hands

3.3.14 MIL–STD–1553 data bus addresses.

The MIL–STD–1553 bus addresses for RS Terminal Interface Units (TIUs) (see 6.2) shall be in accordance with SSP 50097.

AGREED.

3.3.15 MIL–STD–1553 data bus constrains.

The following requirements apply to MIL–STD–1553 data buses that cross RS external interfaces.

AGREED.

3.3.15.1 SSQ components.

RS MIL–STD–1553 network parts (assemblies, subassemblies, and their components) shall be selected from ISS SSQ connectors and MIL–STD–1553 parts as specified in SSP 30423. Other part selections shall be considered as potentially having negative impacts on mission success, and shall be agreed to prior to use by the NASA/RSA.

AGREED.

3.3.15.1.1 Bus coupler type.

RS shall have a maximum of three stubs per coupler.

AGREED.

3.3.15.2 Bus stub length.

a. RS shall have a maximum bus stub length of 20 ft. as measured from the Coupling Transformer to the Isolation Transformer as defined in Figure 12–A, measurement A.

b. For PCS locations the maximum stub length shall be 9 ft.

c. For CHeCs locations the maximum stub length shall be 7 ft.

AGREED.

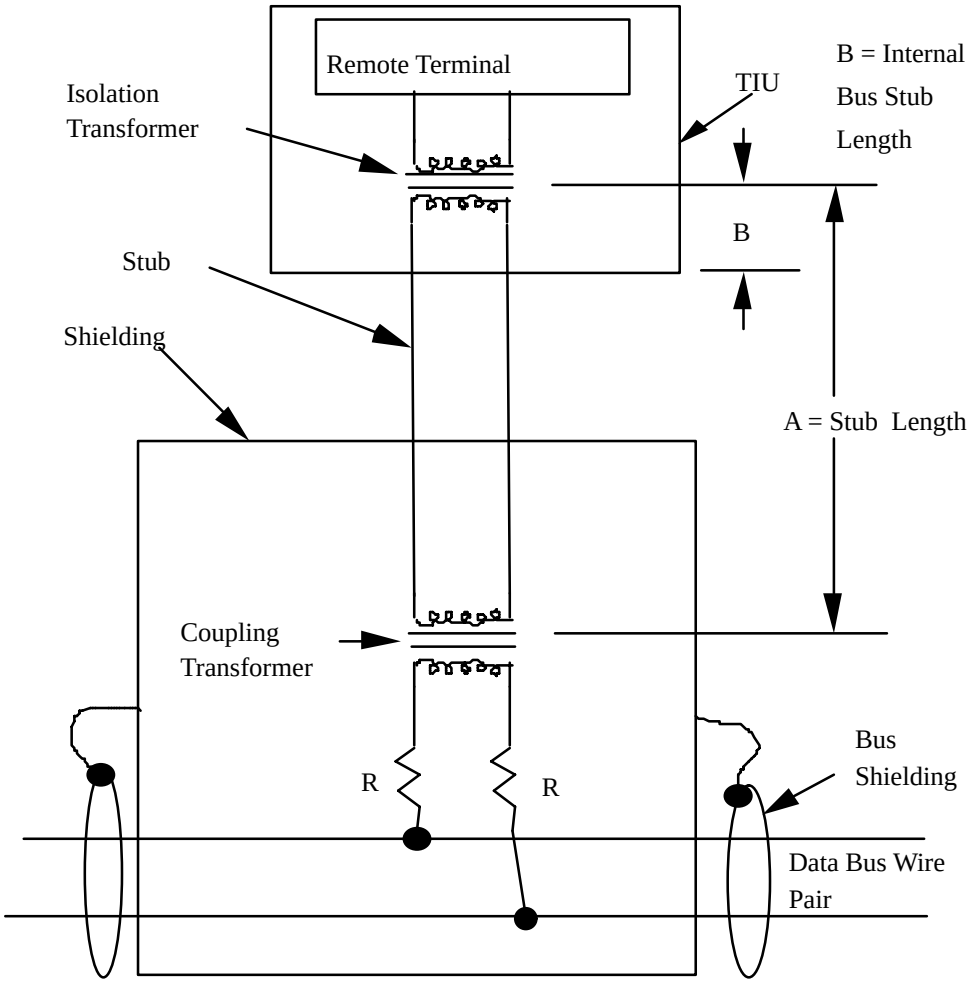

FIGURE 12–A. Typical bus

3.3.15.3 Bus Coupling.

RS TIU connections to MIL–STD–1553 buses shall be by coupling transformers. Bus stubs not terminated in active devices shall be capped.

AGREED.

3.3.16 Terminal Interface Units.

RS TIUs shall be in accordance with MIL–STD–1553 with protocols as defined in SSP 50097 and the following paragraphs.

AGREED.

3.3.16.1 TIU Multiple Bus Isolation.

RS terminal interface unit interfaces shall provide isolation greater than or equal to 65 dB between multiple independent buses in a single connector.

AGREED.

3.3.17 RS not–to–exceed bus length.

RS buses that cross interfaces shall not exceed the bus lengths as specified in Table XVI–A.

TABLE XVI–A. RS not–to–exceed bus lengths

IDENTIFIER	BUS LENGTH
BUS CODE	FEET
CB–GNC–1	65
CB–GNC–2	65
LB–CHECS–SM	70
LB–RS–1	65
LB–RS–2	65
RS–BUS–3	65
RS–BUS–4	65
MSS–PDGF–LB	142
MSS–PDGF–SPP	200

AGREED.

3.4 Computer resource requirements.

3.4.1 Computer hardware design considerations.

The RS shall provide the mechanisms and connectivity to accommodate US portable computers for crew interface with the USOS computer system.

AGREED.

3.4.2 Flexibility and expansion.

On–orbit software shall be modifiable by the ground. RS software shall be partitioned between executable application code and data. Within specific constraints, such as data structure, size, and format, selected software data tables shall be modifiable by the ground without recompilation of associated executable code.

AGREED.

3.5 Logistics.

3.5.1 Maintenance.

3.5.1.1 General maintenance requirements.

3.5.1.1.1 RS logistics infrastructure.

The RS shall sustain the On–Orbit Russian Segment with the necessary infrastructure which enables the performance of on–orbit maintenance and enables the handling of the required logistics equipment, material and services in orbit.

AGREED.

3.5.1.1.2 ORU maintenance level distribution.

The return of procured RS ORUs to serviceable status shall be achieved primarily through the repair of failed ORUs at approved maintenance levels.

AGREED.

3.5.1.2 Perform On–Orbit Maintenance.

3.5.1.2.1 ORU removal and replacement.

The on–orbit return of the RS to an operational condition shall be achieved primarily through the removal and replacement of failed ORUs from their installed location.

AGREED.

3.5.1.2.2 In Situ maintenance.

Requirements for in situ maintenance shall be defined as required for the failure modes which cannot be corrected by ORU removal and replacement.

AGREED.

3.5.1.2.3 Maintenance coordination.

RS maintenance equipment tools, spares, and materials will be evaluated for potential common application. The extent of application will be documented in the implementation plans.

AGREED.

3.5.1.2.4 ORU packaging.

The RS shall package designated ORUs for the removal and replacement of SRUs and for other approved off equipment repairs.

AGREED.

3.5.1.2.5 Procedure storage.

The RS shall be capable of electronically storing for recall, those critical instructions to the crew to perform maintenance which must be electronically recallable by the crew without ground support.

AGREED.

3.5.1.2.6 Liquid or gas venting.

ORUs containing liquids or gases shall be vented before return to Earth on the Orbiter, excluding closed system equipment that has been designed to withstand Orbiter launch and return cycle environments.

AGREED.

3.5.2 Supply.

3.5.2.1 General supply requirements.

3.5.2.1.1 Sustaining fleet resources.

The RS shall accommodate the Fleet vehicle interface requirements. Beginning with assembly complete, the RS propellant resupply scenario shall support micro–gravity acceleration/performance requirements for a minimum of 180 days per year in continuous time intervals of at least 30 days (reference paragraph 3.2.1.1.4.1.1).

The RS on–orbit propellant transfer function shall utilize automated interfacing (no Extravehicular Activity required). The RS design shall accommodate propellant transfer operations from the resupply vehicle. The RS shall support an alternate contingency resupply servicing location from which a vehicle could resupply propellant.

AGREED.

3.5.2.1.2 Missed resupply crew provisions.

Forty–five (45) days of RS crew provisions for a crew of 3 shall be provided and stored on–orbit to accommodate survival requirements in the event of a missed resupply.

AGREED.

3.5.2.1.3 Maintenance resources.

Forty–five (45) days of RS critical spares provisions shall be provided and stored on–orbit to accommodate survival requirements in the event of a missed resupply.

AGREED.

3.5.2.1.4 On–orbit propellant reserve.

For the assembly phase and the post–assembly phase: the on–orbit space station shall have sufficient skip cycle reserve propellant for reboost to an altitude that results in at least 360 days orbital decay to 150 nmi (278 km) under nominal operations.

AGREED.

3.5.2.2 Provide inventory management capability.

3.5.2.2.1 Critical item storage.

The RS shall provide the on–orbit capability to accommodate the storage of critical spares, equipment and material.

AGREED.

3.6 Reserved.

3.7 Characteristics of major functional elements.

3.7.1 Functional cargo block.

3.7.1.1 Purpose.

The purpose of the FGB is to provide for assembly of American and Russian elements of the ISS, accumulation and distribution of the power supply within the frames of the combined power system of the station, reception, storage and delivery of fuel in the combined pneumatic hydraulic system, guidance, navigation, and control, partial life support functions, propulsion services, communications and data links to ground support facilities.

AGREED.

3.7.1.2 Description.

The Functional Cargo Block is a vehicle used in the initial stages as the primary method for station reboost and attitude control containing propulsion, Guidance, Navigation, and Control (GN&C), communications, partial life support functions, electrical power and thermal control systems. At permanent human capability the FGB will provide propellant storage for propulsion reboost and attitude control.

The FGB structure includes the following components:

a. Pressurized compartment
b. Launch shroud (launch support only and not part of on–orbit station)
c. Adapter for docking with the launch vehicle (launch support only and not part of on–orbit station)

The on–board systems of the FGB include the following components:

a. Propulsion unit with subsystem reception, storage and delivery of fuel
b. Power supply system
c. Thermal control system
d. Partial life support functions
e. Androgynous peripheral docking system
f. Modified active docking system
g. Passive docking system (cone)

AGREED.

3.7.1.3 Capabilities.

3.7.1.3.1 Control total pressure.

3.7.1.3.1.1 Monitor total pressure.

The FGB shall automatically monitor the atmosphere total pressure over a range of 0.02 to 19.4 psia (1 to 1000 mm Hg) with an accuracy of +/–0.58 psi (+/–30 mm Hg).

AGREED.

3.7.1.3.2 Control oxygen partial pressure.

3.7.1.3.2.1 Monitor oxygen partial pressure.

The FGB shall monitor the atmosphere oxygen partial pressure over the range of 0 to 5.8 psia (0 to 300 mm Hg) with an accuracy of +/–0.23 psi (+/–12 mm Hg).

AGREED.

3.7.1.3.3 FGB to PMA1 Leak Seal Monitoring and Repressurization.

a. The PMA1 to FGB joint leak seal monitoring in accordance with SSP 42121, paragraph 3.2.2.2.6.2, shall be based on the pressure drop measurement system located in the FGB. The FGB shall have the capability to repressurize twice an isolated PMA1 from 0 psia (0 mm Hg) to a pressure between 9.57 psia (495 mm Hg) and 13.54 psia (700 mm Hg) by means of the joint leak seal monitoring system in the FGB with an equivalent diameter of not less than 0.157 inches (4 mm).

b. The FGB shall make the assessed status and data for repressing PMA–1 available to the USOS in accordance with SSP 50097 ICD, paragraph 3.4.3.1.2.

AGREED.

3.7.1.3.4 Equalize pressure.

The FGB shall equalize the pressure differential between adjacent, isolated volume up to 1766 cubic feet (50 cubic meters) at 15.0 psia and 14.3 psia (775 and 740 mm Hg) to less than 0.01 psid (0.5 mm Hg) within 3 minutes.

AGREED.

3.7.1.3.4.1 Control atmosphere temperature.

3.7.1.3.4.1.1 Monitor atmosphere temperature.

The FGB shall monitor the atmospheric temperature over the range of 60.8 to 89.6 degrees Fahrenheit (16 to 32 degrees Celsius) with an accuracy of +/–1.8 degree Fahrenheit (+/–1.0 degrees Celsius).

AGREED.

3.7.1.3.4.1.2 Remove atmosphere heat.

The FGB shall maintain the atmosphere temperature in the FGB cabin aisleway within the range of 18 to 28 degrees C (64 to 82 degrees F) The stabilized temperature within the FGB cabin airway shall be within +/– 1.5 degrees C (+/– 3 degrees F) of selected temperature.

AGREED.

3.7.1.3.4.2 Control atmosphere moisture.

3.7.1.3.4.2.1 Monitor humidity.

The FGB shall monitor the water vapor pressure in the FGB cabin aisleway over the range of 1 to 35 mm Hg (0.02 to 0.68 psia) with an accuracy of +/– 1.5 mm Hg (+/–0.029 psia).

AGREED.

3.7.1.3.5 Circulate atmosphere.

3.7.1.3.5.1 Circulate atmosphere intra–module.

The FGB shall maintain effective atmosphere velocities in the FGB cabin aisleway within the range of 10 to 40 feet per minute (0.05 to 0.2 meters per second). (See Definition: Effective Atmosphere Velocity, section 6.2)

AGREED.

3.7.1.3.5.2 Circulate atmosphere inter–module.

a. The FGB shall be able to transfer atmosphere to the U.S. Segment in accordance with the joint interface requirements in SSP 42121 ICD, paragraph 3.2.2.3.1, and to the Russian segment in accordance with Russian requirements.

b. The FGB shall be able to receive the returned atmosphere from the U.S. Segment in accordance with the joint interface requirements in SSP 42121 ICD, paragraph 3.2.2.3.2, and from the Russian segment in accordance with Russian requirements.

AGREED.

3.7.1.3.6 Isolate to recovery level.

a. The FGB shall automatically isolate detected failures to the functional recovery level for those functions identified by an ”x” in the Isolation/Auto column of Table XVII. The FGB shall automatically notify RGS and operators with the results of isolation.

TABLE XVII. Failure detection, isolation, and recovery functions

Item	FGB Function	Prior to docking with the SM						After docking with the SM					
		Detection		Isolation		Recovery		Detection		Isolation		Recovery	
		Auto	RGS	Auto	RGS	Auto	RGS	Auto	RGS	Auto	RGS	Auto	RGS
Control atmosphere pressure	Equalize pressure		X										
Circulate atmosphere	Monitor atmosphere temp		X		X		X		X		X		X
	Monitor atmosphere humidity		X		X		X		X		X		X
	Circulate atmosphere intramod	X	X	X	X	X	X	X	X	X	X	X	X
	Collect thermal energy	X	X	X	X	X	X	X	X	X	X	X	X
	Transmit thermal energy	X	X	X	X	X	X	X	X	X	X	X	X

TABLE XVII. Failure detection, isolation, and recovery functions – Continued

Item	FGB Function	Prior to docking with the SM						After docking with the SM					
		Detection		Isolation		Recovery		Detection		Isolation		Recovery	
		Auto	RGS	Auto	RGS	Auto	RGS	Auto	RGS	Auto	RGS	Auto	RGS
	Dispose of thermal energy	X	X	X	X	X	X	X	X	X	X	X	X
Maintain time reference	Distribute time		X		X		X		X		X		X
Support crew (3) interface	Provide data to crew								X		X	X	
Respond to emergency conditions	Detect fire event (2)	X	X	X	X	X	X	X	X	X	X	X	X
Provide electrical power	Generate power	X	X	X	X	X	X	X	X	X	X	X	X
	Distribute power (1)		X		X		X		X		X		X
	Store energy	X	X	X	X	X	X	X	X	X	X	X	X
Support on–orbit/ ground comm	Support uplinked data	X	X	X	X	X	X	X	X	X	X		
	Provide data for downlink		X		X		X		X		X		
Execute translation maneuvers	Execute maneuver guidance	X	X		X		X						
	Execute translation thrust	X	X		X		X						
	Control attitude propulsive	X	X		X		X						
Support uplink data	Receive uplink data FGB 3.2.1.11.1.1 (5)	X	X	X	X	X	X	X	X	X	X	X	X
	Prepare uplink data for on board distribution. FGB 3.2.1.11.1.2		X		X		X		X		X		X

TABLE XVII. Failure detection, isolation, and recovery functions – Continued

Item	FGB Function	Prior to docking with the SM						After docking with the SM					
		Detection		Isolation		Recovery		Detection		Isolation		Recovery	
		Auto	RGS	Auto	RGS	Auto	RGS	Auto	RGS	Auto	RGS	Auto	RGS
	Distribute uplink data FGB 3.2.1.11.1.3 (4)	X	X	X	X	X	X	X	X	X	X	X	X

Notes:
(1) Computer control of distribution switches only.
(2) Applies to fire detection sensors and ventilation only.
(3) Crew interface may be either in the SM or USOS (not in the FGB).
(4) The requirement for automatic fault detection, isolation and recovery applies only to information distribution within the FGB.
(5) After docking with the SM, the command measurement system is used as a backup only and performs, if required, according to the functions listed in Table XVII.

b. The FGB shall through ground stations isolate detected failures to the functional recovery level for those functions identified by an ”x” in the Isolation/RGS column of Table XVII.

AGREED.

3.7.1.3.7 Recover lost function.

a. The FGB shall automatically implement pre–defined recovery procedures for failures of the functions identified by an ”x” in the Recover/Auto column of Table XVII. The FGB shall automatically notify operators with results of recovery processes.

b. The FGB shall, through ground stations, implement recovery procedures for failures of the functions identified by an ”x” in the Recover/RGS column of Table XVII.

c. During manned operations, some FGB functions may be manually recovered.

AGREED.

3.7.1.3.8 Safe.

The FGB shall automatically safe out of tolerance conditions or functional performance that may manifest a catastrophic or critical hazard. The FGB shall automatically notify operators with results of automatic safing processes.

AGREED.

3.7.1.3.9 Reserved.

3.7.1.3.10 Reserved.

3.7.1.3.11 Distribute time.

a. Prior to the activation of the USOS Lab, the FGB shall maintain FGB local time independent of an USOS time reference source. The FGB local time shall be available for USOS access.

AGREED.

3.7.1.3.12 Provide data to crew.

The FGB shall provide facilities for the visual and aural annunciation of Class 1 (Emergency), Class 2 (Warning), and Class 3 (Caution) alarms generated by the USOS and RS in accordance with SSP 50094, section 6.6. The FGB shall provide the capability for the crew to acknowledge and control alarm annunciations generated by the USOS in accordance with SSP 50097 ICD, and alarms generated by the RS.

AGREED.

3.7.1.3.13 Acquire function status data.

3.7.1.3.13.1 Collect function status data.

The FGB shall generate, collect, and process data identifying out–of–tolerance conditions, functional failures, and data describing functional operation of the FGB. Prior to docking with the SM, this data is only telemetered (transmitted) to the RGS.

AGREED.

3.7.1.3.14 Assess function status data.

a. The FGB shall automatically assess the collected data to detect out–of–tolerance conditions and failure of those functions identified by an ”x” in the Detection/Auto column of Table XVII.

b. The FGB shall through ground stations assess the collected data to detect out of tolerance conditions and failures of those functions identified by an ”x” in the Detection/RGS column of Table XVII.

c. The FGB shall automatically assess the collected data to detect catastrophic and critical hazards.

d. The FGB shall provide emergency data to the USOS, SM, and the RGS.

AGREED.

3.7.1.3.15 Provide Crew Control Interface.

From activation of the SM, the FGB shall provide the capability for crew interactive control of on–orbit ISS critical systems, caution and warning messages, and integrated plan functions using a portable U.S. laptop computer. Two computer receptacles (each with a U.S. provided connector) shall be located in the FGB that can be used by a portable U.S. laptop computer for crew interactive control.

AGREED.

3.7.1.3.16 Reserved.

3.7.1.3.17 Respond to fire.

The FGB shall provide Portable Breathing Apparatuses (PBA) and Portable Fire Extinguisher (PFE).

AGREED.

3.7.1.3.17.1 Detect fire event.

The FGB shall detect a fire event in locations in accordance with the selection criteria in Figure 4. The FGB shall activate a Class I alarm for a detected fire event. The FGB shall visually indicate a fire event.

AGREED.

3.7.1.3.17.2 Isolate fire control zone.

The FGB shall isolate a fire event within 30 seconds of detection, including removal of power and forced airflow at the affected location, in accordance with the selection criteria in Figure 4. The FGB shall prevent forced air circulation between modules within 30 seconds of annunciation of a Class I fire alarm.

AGREED.

3.7.1.3.17.3 Extinguish fire.

The FGB fire suppression shall eliminate a fire within one minute of suppressant discharge.

AGREED.

3.7.1.3.17.4 Recover from fire.

The FGB shall restore the habitable environment after a fire event through the use of filters.

AGREED.

3.7.1.3.18 Reserved.

3.7.1.3.19 Respond to hazardous atmosphere.

The FGB shall provide a 15 minute supply of portable emergency breathing capability for three (3) crewmembers.

AGREED.

3.7.1.3.20 Provide electrical power.

3.7.1.3.20.1 Generate power.

The FGB shall have the capability to provide electric power for housekeeping and sustaining operations for the FGB, and to its external interfaces during the insolation and eclipse periods.

AGREED.

3.7.1.3.20.2 Distribute power.

a. The FGB shall distribute power for FGB housekeeping and sustaining operations.

b. The power provided, received, or transferred to the external interfaces shall be in accordance with Table IV and also FGB unique requirements as specified in the FGB Specification SSP 50128, Table 3–III

c. All power at the USOS interface shall be in accordance with SSP 42121 PMA–1 to FGB ICD, paragraph 3.2.2.4 and Appendix B, Electrical Interfaces. All power at the ICM interface shall be in accordance with SSP 50269 FGB to Control Vehicle (Generic) ICD, paragraph 3.2.2.4.

d. All power at Russian element interfaces shall be in accordance with Russian requirements.

AGREED.

3.7.1.3.20.3 Store energy.

The FGB shall have the capability to store energy during the insolation period to provide power during the eclipse period.

AGREED.

3.7.1.3.21 Reserved.

3.7.1.3.22 Maintain Thermal Conditioning.

3.7.1.3.22.1 Collect thermal energy.

The FGB shall collect thermal energy from FGB internal sources to maintain thermal conditioning.

AGREED.

3.7.1.3.22.2 Transmit thermal energy.

The FGB shall transmit thermal energy to maintain thermal conditioning of the FGB.

AGREED.

3.7.1.3.22.3 Dispose of thermal energy.

The FGB shall dispose of thermal energy to maintain thermal conditioning of the FGB.

AGREED.

3.7.1.3.22.4 Passive thermal energy.

The FGB shall comply with the passive thermal requirements as specified in SSP 42121, paragraph 3.2.2.2.4, SSP 50269 FGB to Control Vehicle (Generic) ICD, paragraph 3.2.2.2.4, and Russian requirements.

AGREED.

3.7.1.3.23 Reserved.

3.7.1.3.24 Support internal crew restraint and mobility.

The FGB shall support internal crew translation through the FGB. Handholds and handrails shall be incorporated into the interior of the FGB to facilitate the crew's mobility and stability.

a. Fixed or portable inside vehicular activity mobility aids shall be provided at the following locations:

(1) Mobility aids shall be placed around workstations, access hatches, doors, windows, and pressure hatches.

(2) Mobility aids shall be located at designated terminal points and direction change points on established crew translation paths.

(3) Crew mobility aid provisions shall be made for inside EVA suited operations.

(4) Translation and mobility handholds shall be located where the crewmember is protected from identified hazards.

(5) The orientation and locations of translation and mobility handholds shall be consistent with the crew tasks they are supporting.

b. Inside vehicular activity crew restraints shall be provided at the following locations:

(1) Restraints shall be provided at identified locations where crewmembers are expected to exert forces which cause the body to move in reaction.

(2) Provide personnel restraints at crew stations.

c. Inside vehicular activity personnel restraints shall comply with the following requirements:

(1) Restraint design shall eliminate muscular tension.

(2) The personnel restraint system shall be capable of on–orbit cleaning and repair.

(3) All fixed and portable internal vehicle handholds and handrails shall be designed to an ultimate load of 445 N (100 lbf) applied to any direction without failure or damage.

(4) When hook and loop fasteners are used as a restraint, the item to be restrained shall be equipped with the hook type fastener and the restraining surface shall be equipped with the loop type fastener.

d. The following requirements apply to all inside vehicular activity fixed and portable foot restraints:

(1) All foot restraints shall maintain foot position to allow the crewmember a complete range of motion (roll, pitch, and yaw).

(2) Inside vehicular activity foot restraints and covers shall allow ventilation to the feet.

(3) The foot restraint shall be capable of being removed for replacement/repair.

(4) Foot restraints shall be designed to withstand a tension load of 445 N (100 lbf) as a minimum. Foot restraints shall withstand a torsion load of 100 Nm (75 lbf) as a minimum with the torsion vector parallel to the floor.

e. All inside vehicle mobility paths shall comply with the following requirements:

(1) The minimum cross sectional dimensions of microgravity translation paths for one crewmember in light clothing shall be 65 cm.

(2) A minimum interior cross section dimension of 80 cm shall be maintained to support equipment translation, with the exception of hatchways containing airducts and temporary cables or with exception of flexible guards around hatchways.

(3) Equipment exposed to the translation path shall be designed to withstand a design load of 556 N (125 lbf) and a minimum ultimate load of 778 N (175 lbf).

(4) Non–structural closures shall be capable of sustaining crew–imposed minimum design load of 556 N (125 lbf) distributed within a 25.4 cm (10 inch) diameter circle and a minimum ultimate load of 778 N (175 lbf) distributed within a 25.4 cm (10 inch) diameter circle.

AGREED.

3.7.1.3.25 Control carbon dioxide.

3.7.1.3.25.1 Monitor carbon dioxide.

The FGB shall monitor the atmospheric carbon dioxide level over a range of 0 to 0.48 psia (0 to 25 mm Hg) with an accuracy of +/–0.038 psi (+/–2mm Hg).

AGREED.

3.7.1.3.26 Control airborne particulate contaminants.

3.7.1.3.26.1 Remove airborne particulate contaminants.

The FGB shall limit the atmosphere particulate level of the FGB atmosphere to 0.15 milligrams per cubic meter for particles of 1.0 to 300 microns in size.

AGREED.

3.7.1.3.27 Provide remote internal visual access.

3.7.1.3.27.1 Transmit video signal.

From the activation of the Service Module through permanent human capability:

The FGB shall transmit video to the RS and Russian ground stations in accordance with Russian requirements. The cameras used are not permanently mounted and may be installed or removed as necessary.

AGREED.

3.7.1.3.27.2 Receive video signal.

From the activation of the Service Module through permanent human capability:

The FGB shall receive video from the RS in accordance with Russian requirements. The monitors used are not permanently mounted and may be installed or removed as necessary.

AGREED.

3.7.1.3.28 Transmit voice communications.

3.7.1.3.28.1 Transmit hardwire.

The FGB shall support the transmission of internal voice communications to the USOS and the transmission of internal voice communications between the crew members on the RS on–orbit element.

The FGB shall transmit the voice communications to the USOS and to the RS on–orbit element.

The FGB shall provide uninterrupted transmission of a loud annunciation (paging signal), and caution and warning signals from the Service Module to the PMA–1.

The characteristics of the transmission of voice communication, loud annunciation (paging signal), and caution and warning for the USOS shall be in accordance with SSP 42121 ICD, paragraphs 3.2.1.5.1 and 3.2.2.5.1.

The characteristics of the transmission of voice communication, loud annunciation (paging signal), and caution and warning for the RS shall be in accordance with Russian Requirements.

AGREED.

3.7.1.3.29 Receive voice communication.

3.7.1.3.29.1 Receive hardwire.

The FGB shall support the reception of internal voice communications from the USOS and the reception of internal voice communications between the crew members on the RS on–orbit element.

The FGB shall receive the voice communications from the USOS and from the RS on–orbit element.

The FGB shall provide uninterrupted transmission of a loud annunciation (paging signal) and caution and warning signals from the PMA–1 to the Service Module.

The characteristics of the reception of voice communication, loud annunciation (paging signal), and caution and warning from the USOS shall be in accordance with SSP 42121 ICD, paragraphs 3.2.1.5.1 and 3.2.2.5.1 and for the RS, shall be in accordance with Russian requirements.

AGREED.

3.7.1.3.30 Support uplinked data.

3.7.1.3.30.1 Receive uplinked data.

The FGB shall receive the data stream uplinked from the RGS. The Bit Error Rate for command link shall be less than 1 error in 10E6 transmitted bits of data.

AGREED.

3.7.1.3.30.2 Prepare uplinked data for on–board distribution.

The FGB shall de–multiplex and convert the uplinked data to formats compatible with the on–orbit space station.

AGREED.

3.7.1.3.30.3 Distribute uplinked data.

The FGB shall distribute uplinked digital data with other on–orbit Space Station segments in accordance with SSP 42121 ICD, paragraph 3.2.2.5.3, and Russian requirements, and within the FGB.

AGREED.

3.7.1.3.31 Provide data for downlink.

3.7.1.3.31.1 Prepare data for downlink.

The FGB shall acquire analog and digital data (to include telemetry data) for the downlink from sources within the FGB and from interfaces with other on–orbit Space Station segments.

The reception of telemetry (TLM) data from other segments of the ISSA to the FGB radio telemetry system is provided through hardwire interfaces only.

AGREED.

3.7.1.3.31.2 Transmit data for downlink.

The FGB shall transmit the data streams to the RGS. The Bit Error Rate for the telemetry link shall be less than 10E–3. The Bit Error Rate for command link shall be less than 1 error in 10E6 transmitted bits of data.

AGREED.

3.7.1.3.32 Support internal equipment translation.

The FGB shall provide handles or structural or mechanical parts suitable for gripping and tethering equipment that requires moving in accordance with SSP 50094, paragraph 6.4.2.

AGREED.

3.7.1.3.33 Support internal equipment removal and replacement.

The FGB shall provide crew and equipment restraints capable of being located throughout the FGB pressurized habitable volume to support removal and replacement of ORUs and in situ maintenance.

AGREED.

3.7.1.3.34 Support internal equipment identification.

The FGB shall provide inventory labels on portable equipment and ORUs to maintain an on–orbit inventory to support logistics/resupply operations.

AGREED.

3.7.1.3.35 Support internal equipment restraint.

The FGB shall provide equipment restraints for every item that is not permanently attached to the FGB structure.

AGREED.

3.7.1.3.36 Execute maneuver guidance.

From the activation of the Functional Cargo Block (FGB) until the activation of the Service Module (SM) or Interim Control Module (ICM) [1A/R, 2A] in the FGB and FGB+Node 1 Configurations:

a. The FGB shall control the on–orbit Space Station invariant semimajor axis to within 2000 feet (3 sigma) of the targeted value at the end of the reboost maneuver.

b. The FGB shall be capable of controlling the on–orbit Space Station orbit by executing open loop maneuver sequences provided by RGS.

c. The FGB shall automatically dock with the SM (not Orbiter assisted docking) [2A] if the FGB was launched in the +X configuration to support a SM that is not Orbiter assisted.

AGREED.

3.7.1.3.37 Execute translation thrust.

a. From the activation of the Functional Cargo Block (FGB) until activation of the Service Module (SM) or until activation of the ICM in the FGB and FGB+Node 1 configurations [1A/R, 2A]:

Note: The FGB is not required to provide translational thrust during periods when the ICM is attached. [2A.1, 3A, 4A, 5A, 6A, 7A].

(1) The FGB shall be capable of executing a maneuver of up to 5 feet per second (1.5 meters per second) within 90 minutes after receiving the RGS command data stream (flight assignment).

(2) The FGB shall have the capability to terminate a maneuver execution on command originating from RGS within 1.0 second of receipt of the command, excluding the time for thrust tail off.

(3) The FGB shall control translation maneuver initiation and termination times to within 1.0 second of the targeted values, excluding the time of thrust build up or tail off.

(4) The FGB shall have the capability to execute translational maneuvers per commands and other data originating from the RGS.

(5) The FGB propulsive effectors shall have a service life sufficient to complete the reboosts until the SM activation.

(6) The FGB shall be able to inhibit thrusters from firing when in contact with the Orbiter.

(7) The FGB shall be designed to send propulsive effector data to the RGS.

(8) The FGB shall have the capability to determine total propellant levels (reserves) in the FGB tanks and report them to the RGS.

(9) The FGB propulsion system shall have performance as shown in Table VI–B.

b. From activation of the SM:

(1) The FGB shall have capability to store 5700 kg of propellant.

(2) The FGB shall have the capability to determine total propellant levels (reserves) in the FGB tanks and report them to the SM systems.

(3) After docking with the Service Module, the FGB engines shall be isolated and shall not leak for the life of the FGB.

(4) For off–nominal situations (lack of propellant in CV), the FGB shall have the capability to supply propellant through the SM to CV thrusters. The FGB/SM interface pressure shall be not less than 19.0 kgf/cm2 for oxidizer and 19.2 kgf/cm2 for fuel; the flowrate shall be not less than 206 grams/sec for oxidizer, and 111.4 grams/sec for fuel. This capability shall be sufficient to support the operation of 6 CV thrusters.

AGREED.

3.7.1.3.38 Control attitude – propulsive.

a. From the activation of the Functional Cargo Block (FGB) until activation of the Service Module (SM) [1A/R, 2A] or until activation of the ICM [2A.1]:

(1) The FGB shall control attitude rates to within +/–1.50 degrees per second per axis when performing translational maneuvers.

(2) The FGB shall have the capability to control to LVLH (LVLH is the same coordinate system as on–orbit Coordinate System) and inertial attitudes using propulsive effectors.

(3) The FGB shall send attitude determination and attitude control system data to the RGS.

(4) The FGB shall execute attitude control per commands and other data originating from the RGS.

(5) The FGB shall provide dynamic stability to perform berthing with the Orbiter at an altitude of 278 kilometers (150 nautical miles) or above.

(6) The FGB shall provide attitude control capability during all phases of Orbiter approach, FGB approach to SM, and departure operations, and the capability to return to the desired attitude after completion of Orbiter undocking operations.

(7) The FGB shall maintain its attitude and attitude rate in the LVLH frame with an accuracy of +/–1.5 degrees and +/– 0.1 degree per second per LVLH axis.

(8) The FGB shall be able to discontinue attitude control after grappling with the Orbiter independent of USGS or RGS.

(9) The FGB shall provide an indication to the Orbiter crew, within 5 seconds after receiving the signal to disable attitude control, that the FGB attitude control system has been disabled in accordance with SSP 42121 ICD, appendix C (for grappling with RMS).

(10) The FGB shall provide the capability to disable the attitude control system by the RGS when the FGB is in the region of radio control.

(11) The FGB shall be able to maintain attitude and attitude rate of the Space Station to an accuracy of +/– 10.0 degree per LVLH axis and +/– 0.1 degree per second per LVLH axis to support Orbiter grappling, in the absence of Orbiter thruster firing.

(12) The FGB shall activate its attitude control system in a preparation mode with its thrusters inhibited within 2.5 seconds of receipt of the Orbiter departure indication from the USOS in accordance with SSP 50097.

(13) The FGB shall remove the inhibits of thruster firing following a RGS sourced time delay (22 – 60 minutes in 1 second increments).

(14) The FGB time delay shall begin upon the receipt of an Orbiter departure indication from the USOS in accordance with SSP 50097. The value of the time delay should be received by the FGB from the RGS prior to the departure of the Orbiter.

(15) The FGB shall provide an indication of the mode of attitude control (either active or free drift) to the USOS in accordance with SSP 50097 and SSP 42121 within 6 seconds of changing the attitude control mode.

(16) The FGB Attitude Control System's contribution to the peak to peak angular motion (dynamic error range) shall be within 4.0 degrees peak to peak per axis after a failed Orbiter docking and back away.

(17) The FGB Attitude Control System shall maintain angular rate of the FGB body axes relative to the true LVLH coordinates to within 0.1 degrees per second per axis after a failed Orbiter docking and back away.

b. From the activation of the SM:

(1) The FGB shall be designed to send propulsion system data to the RGS and SM.

(2) After docking with the SM, the FGB engines shall not be used.

(3) The FGB shall distribute the USOS attitude control system commands to the SM, and shall distribute attitude control system status from the SM to the USOS in accordance with SSP 42121, paragraph 3.2.1.5.3.5.

AGREED.

3.7.1.3.38.1 Control Attitude Propulsively in the configurations indicated in TableXVIII.

TABLE XVIII. ISS Configurations requiring FGB Attitude Control

		Configuration
a.	2A.1	FGB+Node1+ICM
b.	3A	FGB+Node1+ICM +Z1 (PMA3)
c.	4A	FGB+Node1+ICM +Z1 (PMA3) + Orbiter (P6 in Orbiter PLB).
d.	4A	FGB+Node1+ICM +Z1 (PMA3) + P6 (SA DEP)
e.	5A	FGB+Node1+ICM +Z1 (PMA3) + P6 (SA Trk) + Orbiter (US lab in Orbiter PLB)
f.	5A	FGB+Node1+ICM +Z1 (PMA3) + P6 (SA Trk) + US lab (CMG failure to activate)
g.	6A	FGB+Node1+ICM +Z1 (PMA3) + P6 (SA Trk) + US lab + SSRMS
h.	7A	FGB+Node1+ Z1 (PMA3) + P6 (SA Trk) + US lab + SSRMS + Airlock +ICM
i.	7A	FGB+Node1+Z1 (PMA3) + P6 (SA Trk) + US lab + SSRMS + Airlock (NO ICM)

a. When supporting Orbiter–assisted attachment of the Interim Control Module (ICM) or SM (flights 2A.1 and 7A.1):

(1) The FGB shall maintain the attitude of the ISS for docking of the Orbiter with the ICM or SM with the following:

a. Accuracy of knowledge of attitude: 1.5 degrees.

b. Accuracy of attitude under dynamic conditions: +/– 1.0 degrees.

c. Attitude rate: 0.04 degrees/sec.

(2) The FGB shall maintain orientation for rendezvous of the Orbiter delivering the Interim Control Module (ICM) or SM for two orbits.

(3) The FGB shall discontinue attitude control after receiving the ”capture” (Russian: Sepka”) signal from its combined axial docking assembly.

(4) During Orbiter–assisted docking of the ICM or SM, within 5 seconds after receiving the ”capture” (Russian: Sepka”) signal the FGB shall halt engine operation.

(5) Within 5 seconds of cessation of engine operation, the FGB shall send the Orbiter crew information on the cessation of the FGB’s attitude–control engines. Data transmission to the Orbiter crew consists in shutting off the FGB’s signal lights 5 seconds after cessation of FGB engine operation.

(6) The FGB shall restore orientation after departure of the Orbiter that delivered the ICM, on command from RGS.

b. Support docking of Progress with the FGB's nadir port in the configurations indicated in Table XVIII (except flight 2A.1).

(1) The FGB shall maintain the orientation of the ISS for docking with Progress.

(2) The FGB shall discontinue attitude control after receiving the "capture" ("engagement") signal from its "pin–cone" (–Y) docking mechanism during docking of the Progress.

(3) The ICM controls the attitude of the ISS in the presence and after the departure of Progress.

c. Maintain the attitude of the ISS in the presence of the ICM in the configurations indicated in Table XVIII.

(1) By turns with the ICM, the FGB shall be capable of orienting the ISS in the configurations presented in Table XVIII.

(2) The FGB shall be capable of orienting the ISS (both in the presence of the Orbiter as part of the ISS, and in its absence) in the LVLH system or in the inertial reference frame (XPOP) by using the attitude–control engines.

(3) The FGB shall orient the ISS with respect to the specified attitude to an accuracy of +/–3.0 degrees (the error of knowledge) per axis in the FGB's reference frame during attitude control in LVLH or XPOP.

(4) The FGB shall control the rate of change of ISS attitude to an accuracy of +/–0.03 degrees per second per axis relative to the specified rate of change of attitude (when no corrective impulse is issued).

(5) The FGB shall be capable of attitude control on the basis of flight assignments received from RGS.

(6) The FGB shall maintain ISS attitude within +/–15 degrees with respect to yaw and roll and up to +/–45 degrees with respect to pitch for the configuration corresponding to flight 4A and up to +/–25 degrees with respect to pitch for configurations 5A, 6A, and 7A (according to Table XVIII) with respect to the LVLH system (0, 0, 0) attitude in the FGB reference frame to satisfy thermal constraints and power generation requirements and to minimize the use of propellant when using propulsive control.

(7) When the Orbiter is mated to the Space Station and the FGB is controlling attitude, the FGB shall maintain Space Station attitude within +/–15 degrees in roll and yaw , and +25 to –15 degrees in pitch with respect to (0, 0, 0) LVLH orientation in the FGB reference frame to meet thermal constraints and power generation requirements and to minimize the use of propellant when using propulsive control.

d. Support the departure of the ICM in configurations 7A (according to Table XVIII):

(1) The FGB shall be able to activate thruster operations after separation of the ICM by command from Russian Ground Stations.

(2) The FGB motion–control system (MCS) shall be switched to preparation mode within 2.5 seconds after the command for departure of the ICM is received on board the FGB; in this case, the FGB engines shall not be fired.

(3) Status data on the MCS shall be generated in the FGB's MDM on the basis of analysis of telemetry data received from the MCS, and shall be sent over the 1553 bus to the MDM of NODE1 in accordance with SSP 50097.

(4) The FGB shall provide attitude control mode (either active mode or free drift) indication for the USOS within 6 seconds of a change in attitude–control mode.

(5) The FGB shall have the capability to fire thrusters no sooner than 22 minutes after the command for departure of the ICM is received on board the FGB.

(6) The FGB shall begin attitude control 40 to 120 minutes after completion of MCS preparation (the value is specified from the RGS as part of the flight assignment and defines the time required for construction of the reference frame attitude) when the Orbital Coordinate System (OCS) has been constructed. The amount of delay (40–120 minutes) shall be specified in increments of 1 second. The length of the time delay shall be received by the FGB from the RGS prior to departure of the ICM.

* Note: The specific delay time shall lie within the indicated interval and take account of FGB power and propellant consumption requirements.

AGREED.

3.7.1.3.38.2 Indicate Status of motion control system.

For all flights: The FGB shall provide an indication of the mode of attitude control (either active or free drift) to the USOS in accordance with SSP 50097 within 6 seconds of changing the attitude control mode.

AGREED.

3.7.1.3.39 Limit accelerations.

Beginning with assembly complete, the FGB shall provide the following microgravity acceleration performance at the locations specified below for a minimum of 180 days in continuous time intervals of at least 30 days.

a. The FGB shall limit the quasi–steady (<0.01 Hz) acceleration magnitude from individual FGB disturbance sources to less than or equal to 0.02 micro–g at the centers of at least 50% of the internal payload locations as defined in the RS Microgravity Control Plan (RPO 0754), excluding aerodynamic and gravitational forces.

b. The FGB shall limit attenuated vibratory accelerations (0.01</=f</=10.0 Hz) from FGB disturbance sources to 40.8% of the levels specified in Figure 5–A, at the structural mounting interfaces of at least 50% of the internal payload locations as defined in the RS Microgravity Control Plan (RPO 0754). The attenuation levels specified in Figure 5–B shall be applied to the unattenuated accelerations to determine the attenuated vibratory accelerations.

c. The FGB shall limit the translational and rotational vibratory accelerations (10.0<f</=300.0 Hz) from FGB disturbance sources to a combination of 100% using 40.8% of the 25%, 50%, and 75% translational and rotational levels as specified in Figure 5–C and 5–D respectively at the RS to USOS structural interface.

d. The FGB shall limit attenuated transient accelerations from individual FGB transient

disturbance sources to less than or equal to 1000 micro–g per axis, and when integrated over any 10 second interval to less than or equal to 10 micro–g seconds per axis, at the structural mounting interfaces of at least 50% of the internal payload locations as defined in the RS Microgravity Control Plan (RPO 0754). The attenuation levels specified in Figure 5–B shall be applied to the unattenuated accelerations to determine the attenuated transient accelerations.

AGREED.

3.7.1.3.40 Light FGB.

3.7.1.3.40.1 Control internal lighting.

The FGB shall control internal lighting levels. The FGB shall utilize light fixtures that have their own control. The FGB shall provide centralized lighting control for each compartment translation path. The FGB shall locate lighting controls at entrances and exists of habitable areas.

AGREED.

3.7.1.3.40.2 Illuminate internal areas.

The FGB shall illuminate crew living areas, passageways, and interior crew work stations in support of general task, conduct of experiments, emergency egress and maintenance. The FGB illumination levels shall be as shown in Table XIX.

Maintenance worksites shall be able to be illuminated with portable lights.

AGREED.

TABLE XIX. FGB interior lighting intensity levels

Area	Lux Range	fc Range
General (Variable)	50 to 300	4.6 to 27.9

3.7.1.3.41 Support housekeeping.

The FGB shall support routine cleaning, and trash collection. The capture volumes for airborne particles shall be accessible for replacement or cleaning without dispersion of the trapped materials. Collected trash shall be isolated, contained, and removed from the FGB for ultimate disposal.

AGREED.

3.7.1.3.42 Store internal equipment.

a. The FGB shall provide at least 6.7 cubic meters of storage volume for U.S. (non–FGB) items in accordance with SSP 42121, paragraph 3.2.2.1.2, FGB Stowage Volumes.

b. The FGB shall provide storage volume to store spare internal, diagnostic equipment, and maintenance supplies that are necessary to repair and maintain the FGB. This storage volume shall not intrude into the 6.7 cubic meters of storage volume reserved for items of the U.S. Segment identified in (a).

AGREED.

3.7.1.3.43 Support orbital replacement unit repair.

The FGB shall support limited repair of selected ORUs as specified below:

a. The FGB shall be designed to permit on–orbit maintenance.

b. The on–orbit return of the FGB to an operational condition shall be primarily through the removal and replacement of failed ORUs from their installed locations.

c. Requirements for in–situ maintenance shall be defined as required for the failure modes which cannot be corrected by ORU removal and replacement.

d. The FGB hardware shall utilize ISS coordinated maintenance equipment, tools, and materials.

AGREED.

3.7.1.3.44 Capability: Provide automated collision avoidance maneuvers. (RSS 3.2.1.1.6)

The FGB (for the FGB and FGB+Node 1 configuration (2A)) shall have automated collision avoidance maneuvers to provide safe trajectories if an abort is initiated by onboard software or RGS.

AGREED.

3.7.1.3.45 Capability: Provide docking status.

a. During active docking operations of the FGB with the SM (not Orbiter assisted), the axial combination (active) docking unit along axis +X of the FGB shall provide information on the docking status to the ground.

b. During docking operations with ICM or the SM (with the aid of the Orbiter), the combination passive docking unit of the FGB along axis +X shall provide information on the mechanical capture signal (Russian ”sepka”) to the FGB Onboard Control Complex and to the ground.

c. During Progress or Soyuz vehicle docking, the passive docking unit of the nadir assembly of the FGB along axis –Y shall provide information on the mechanical capture signal (Russian ”sepka”) to the FGB Onboard Control Complex, and to the ground, and to the SM (if present).

d. During berthing of the FGB with the NODE 1 Module, the peripheral passive docking unit of the FGB along axis –X shall provide information on the mechanical capture signal (Russian ”sepka”) to the FGB Onboard Control Complex and to the ground.

NOTE:

1. After docking with the previously mentioned modules (with the exception of the ICM) to the corresponding docking units of the FGB, the active latches will close.

2. Information to the ground as mentioned above will be provided only when in the region of the Russian Ground Segment.

AGREED.

3.7.1.3.46 Capability: FGB relative navigation support.

The FGB shall provide passive vehicle relative navigation equipment to facilitate other Russian vehicle auto docking at the FGB nadir port and active vehicle navigation equipment to facilitate FGB docking at the SM.

AGREED.

3.7.1.3.47 Capability: FGB video transmission.

The FGB shall provide for transmission of video to the Russian Ground Segment (when within view) during the FGB approach and docking with the SM and for transmission to the SM when within communication range in order to support the teleoperator mode.

AGREED.

3.7.1.3.48 Automatic power reduction.

From activation of the FGB until activation of the SM:

When the FGB detects a low voltage condition within the FGB electricalpower system and the FGB is not able to provide power to the U.S. as specified in Table IV, the FGB shall issue power reduction commands to the U.S. Node 1 MDM in accordance with SSP 50097.

AGREED.

3.7.1.3.49 Communication with US Airlock Orlan suits.

a. The FGB shall provide for the external accommodation of the Orlan coaxial communication cable.

b. The FGB shall provide a connector interface to the USOS for the Orlan coaxial communication cable in accordance with SSP 42121, Appendix I, section 3.2.1.1.

c. The FGB shall provide a connector interface to the SM for the Orlan coaxial communication cable in accordance with Russian requirements.

AGREED.

3.7.2 Service Module

3.7.2.1 Purpose.

The purpose of the SM is to provide the following services and capabilities: guidance, navigation and control, propulsion services, (except for the time when the ATV is docked to the SM), electrical power distribution; communications and data links to ground support facilities; environmental control and life support; thermal control and heat rejection; data processing, storage and transportation; housekeeping; personal hygiene; food preparation and storage; and real–time operations command, control, and monitoring support to the Space Station.

AGREED.

3.7.2.2 Description.

The Service Module is the initial habitation and laboratory module.

AGREED.

3.7.2.3 Capabilities.

3.7.2.3.1 Control total pressure.

3.7.2.3.1.1 Monitor total pressure.

The SM shall automatically monitor the ISS atmosphere total pressure over the range of 0.02 to 19.4 psia (1 to 1000 mm Hg) with an accuracy of +/–0.58 psi (30 mm Hg).

AGREED.

3.7.2.3.2 Control oxygen partial pressure.

3.7.2.3.2.1 Monitor oxygen partial pressure.

The SM shall monitor the atmosphere oxygen partial pressure over a range of 0 to 5.8 psia (0 to 300 mm Hg) with an accuracy of +/– 0.23 psia (12 mm Hg) for the range of 0 to 3.9 psia (0 to 200 mm Hg) and an accuracy of +/– 0.33 psia (17 mm Hg) for the range of 3.9 to 5.8 psia (200 to 300 mm Hg).

AGREED.

3.7.2.3.2.2 Introduce oxygen.

The SM shall control the ISS atmosphere oxygen partial pressure in the on–orbit Space Station between 146 to 178 mm Hg (2.83 and 3.35 psia) with a maximum concentration of 24.8% by volume. The SM shall introduce oxygen into the atmosphere to support human metabolic needs of 0.86 Kg per person per day (1.89 lbm per person per day) for three crew members for normal operations and six crew members for crew transfer operations.

AGREED.

3.7.2.3.3 Reserved.

3.7.2.3.4 Equalize pressure.

The SM shall equalize the pressure differential between adjacent, isolated volumes up to 1766 cubic feet (50 cubic meters) at 15.0 psia and 14.3 psia (740 mm Hg and 775 mm Hg) to less than 0.01 psid (0.5 mm Hg) within 3 minutes.

AGREED.

3.7.2.3.5 Control atmosphere temperature.

3.7.2.3.5.1 Monitor atmosphere temperature.

The SM shall monitor the atmosphere temperature over the range of 60 to 90 degrees F (15.5 to 32.2 degrees C) with an accuracy of +/–1 degree F (0.5 degrees C).

AGREED.

3.7.2.3.5.2 Remove atmospheric heat.

The SM shall maintain the atmosphere temperature in the SM cabin aisle way within the range of 18 to 28 degrees C (64 to 82 degrees F). The stabilized temperature within the SM cabin airway shall be within +/– 1.5 degrees C (+/– 3 degrees F) of the selected temperature.

AGREED.

3.7.2.3.6 Control atmosphere moisture.

3.7.2.3.6.1 Remove excess moisture from cabin atmosphere.

a. The SM shall maintain the atmosphere relative humidity in the cabin aisle way of all RS elements within the range of 30 to 70%.

b. The SM shall maintain the atmosphere dew point in the RS cabin aisle way within the range of 4.4 to 15.6 degrees C (40 to 60 degrees F).

AGREED.

3.7.2.3.6.2 Dispose of removed moisture.

The SM shall deliver humidity condensate to the SM waste water bus for processing at an average rate of 1.5 Kg per person per day (3.3 lbm per person per day).

AGREED.

3.7.2.3.6.3 Monitor humidity.

The SM shall monitor the water vapor pressure in the SM cabin aisleways over a range of 0 to 30 mm Hg (0 to 0.58 psia) with an accuracy of +/–1.6 mm Hg (0.031 psia) for the range of 0 to 16 mm Hg (0 to 0.31 psia) and an accuracy of +/– 3.0 mm Hg (0.06 psia) for the range of 16 to 30 mm Hg (0.31 to 0.58 psia).

AGREED.

3.7.2.3.7 Circulate atmosphere.

3.7.2.3.7.1 Circulate atmosphere intra–module.

The SM shall maintain atmosphere velocities in the SM cabin aisle way within the range of 10 to 40 feet per minute (0.05 to 0.2 meters per second).

AGREED.

3.7.2.3.7.2 Circulate atmosphere inter–module.

The SM shall exchange atmosphere with adjacent pressurized volumes. The SM shall supply atmosphere with the USOS at a rate of 127 to 148 cubic feet per minute (60 to 70 liters per second).

AGREED.

3.7.2.3.8 Light Station.

3.7.2.3.8.1 Control internal lighting.

The SM shall provide centralized lightning control for each compartment and translation path.

AGREED.

3.7.2.3.8.2 Accommodate on SM a source of light (navigation light) for Shuttle Star Tracker.

The SM accommodates a US supplied continuous white light source.

a. The SM shall provide structural, thermal, electrical, command (on/off) interfaces and support to the US supplied light in accordance with RSC–E/NASA Protocol No. 9–035/97.

b. The tracking light shall be boresighted at 30 degrees below the ISS/SM X–AXIS. The mounting accuracy of the navigation light shall be +/– 1 degree in any axis.

c. With or without the Soyuz or Progress docked, the Field Of View shall be 60 degrees. When a vehicle of larger diameter than the Soyuz or Progress is docked, the field of view may be less than 60 degrees.

AGREED.

3.7.2.3.8.3 Illuminate internal area.

The SM shall illuminate crew living areas, passageways, and interior crew workstations in support of general task, conduct of experiments, emergency egress, and maintenance. The SM illumination levels shall be as shown in Table 1.

AGREED.

3.7.2.3.9 Isolate to recovery level.

The SM shall automatically isolate detected failures to the functional recovery level for the functions defined in Table II. The SM shall automatically notify operators with results of automatic isolation.

AGREED

3.7.2.3.10 Recover lost function.

a. The SM shall automatically implement pre–defined recovery procedures for failures of the functions defined in Table II.

b. During manned operations, some SM functions will be manually recovered.

c. The SM shall automatically notify operators with results of automatic recovery processes.

AGREED.

3.7.2.3.11 Safe.

The SM shall automatically safe out of tolerance conditions or functional performance that may manifest a catastrophic or critical hazard. The SM shall automatically notify operators with results of automatic safing processes.

AGREED.

3.7.2.3.12 Maintain station mode.

a. The SM shall control functions, associated functions and subfunctions consistent with the current mode. Specifically,

(1.) The SM shall reject operator requests for RS mode constrained software controlled functions.

(2.) The SM shall notify the command source on rejecting a command due to RS mode constraints.

(3.) The SM shall provide an operator ability to force execution of a RS constrained software controlled function.

(4.) The SM shall notify the requesting command source when a RS mode constrained software controlled function is being forced to execute.

(5.) The SM shall manage its resources such that 24 hour on–orbit vehicle autonomy is supported and the RS power and thermal resource capabilities are not violated.

(6.) The SM shall manage its resources such that USOS power resource capabilities are not violated.

b. From the activation of the SM through first Orbiter departure after the activation of the USL:

The SM shall deactivate (mode to free drift) its attitude control system within 5.0 seconds of receipt of the Orbiter capture indication from the USOS in accordance with SSP 50097.

c. For all stages:

(1.) The SM shall activate (mode to active attitude control) its attitude control system within 5.0 seconds of receipt of the Orbiter departure indication from the USOS in accordance with SSP 50097.

(2.) The SM shall provide an indication of the mode of attitude control (either active or free drift) to the USOS in accordance with SSP 50097 within 2.1 seconds of changing the attitude control mode.

d. From activation of the SM until activation of the U.S. element P6:

When the SM receives an indication of a low voltage condition within the FGB electrical power system and the FGB is not able to provide power to the USOS as specified in Table IV, the SM shall issue power reduction requests to the U.S. Node 1 MDM in accordance with SSP 50097, paragraph 3.4.1.2.2.2.

e. After activation of the USL:

The SM shall accept commands from the USOS to reduce consumption of USOS–provided power in accordance with SSP 50097, paragraph 3.4.1.1.1.3.

AGREED.

3.7.2.3.13 Transition station modes.

The SM shall receive and execute commands issued from the USOS, in accordance with SSP 50097 ICD, to establish a new functional configuration based on mode applicability of functions in Table III such that:

a. Software controlled SM functions which are not allowed in the new mode are constrained.

b. Software controlled SM functions which are allowed in the new mode are enabled.

c. Software controlled SM functions which are active but are not allowed in the new mode are deactivated.

d. Software controlled SM functions which are not active but are continuous in the new mode are activated.

During the mode transition process, the RS shall continue software controlled RS functions which are both active and allowed in both modes.

AGREED.

3.7.2.3.14 Provide data to crew.

a. The SM shall acquire and present configuration status and annunciation message data to the crew in the RS and to the USOS in accordance with SSP 50097 ICD.

b. The SM shall provide facilities for the visual and aural annunciation of Class 1 (Emergency), Class 2 (Warning), and Class 3 (Caution) alarms generated by the USOS and RS. The visual and aural annunciation data shall be presented to the crew in accordance with SSP 50094.

c. The SM shall report Class 1, 2, and 3 C&W events detected within the RS to the USOS in accordance with SSP 50097 within 2.85 seconds from confirmation of the detected event.

d. The SM shall pass through Class 1, 2, and 3 C&W events to the USOS within a latency of 1.6 seconds measured from receipt by SM of the C&W event notification from the FGB, the LSM, the DC, the UDM, the SPP, and the RMs.

Note: This 1.6 seconds is a part of the overall latency from confirmation of the event to receipt of the event by the USOS and does not include the latency in these modules from confirmation of the event to transmission to the SM.

e. The SM Central Computer shall provide visual and aural annunciation of C&W events within 1.85 seconds from receipt of C&W event visual and aural annunciation notification from the USOS in accordance with SSP 50097.

AGREED.

3.7.2.3.15 Accept crew inputs and commands.

a. The SM shall accept, validate, and acknowledge inputs and commands from the crew located in the RS or in the USOS in accordance with SSP 50097 ICD.

b. The SM shall provide the capability for the crew to acknowledge and control alarm annunciations generated by the RS and USOS. The crew input interfaces shall be in accordance with the SSP 50094.

AGREED.

3.7.2.3.16 Acquire function status data.

a. The SM shall acquire SM performance, configuration and status data, and out–of–tolerance conditions for SM allocated functions including catastrophic and critical hazards.

b. The SM shall make this data available for Space Station system function status assessment to the USOS, in accordance with SSP 50097 ICD, and to the RS ground segment.

AGREED.

3.7.2.3.17 Assess function status data.

a. The RS shall assess the acquired data to determine SM function status and to detect the occurrence of out–of–tolerance conditions, pre–defined failures, and catastrophic or critical hazard events within the SM requiring crew or on–orbit automated response.

b. The RS shall classify each abnormal event as a Class 1 (Emergency), Class 2 (Warning) or Class 3 (Caution) alarm event.

c. On the occurrence of an alarm event, the SM shall notify the crew interface function so that the appropriate alarm annunciations can occur.

d. The RS shall automatically detect out–of–tolerance conditions related to catastrophic or critical hazards.

e. The RS shall make the assessed status, alarm event, and hazard condition data available for the USOS, in accordance with SSP 50097 ICD, and the ground.

AGREED.

3.7.2.3.18 Respond to fire.

The SM shall provide PBA and PFE.

AGREED.

3.7.2.3.18.1 Detect fire event.

The SM shall detect a fire event in locations in accordance with the selection criteria in Figure 4. The SM shall activate a Class I alarm for a detected fire event. The SM shall visually indicate a fire event.

AGREED.

3.7.2.3.18.2 Isolate fire control zone.

The SM shall isolate a fire event within 30 seconds of detection, including removal of power and forced airflow at the affected location in accordance with the selection criteria in Figures 4. The SM shall prevent forced air circulation between modules within 30 seconds of annunciation of a Class I fire alarm.

AGREED.

3.7.2.3.18.3 Extinguish fire.

The SM fire suppression shall eliminate a fire within one minute of suppressant discharge.

AGREED.

3.7.2.3.18.4 Recover from fire.

The SM shall restore the habitable environment after a fire event.

3.7.2.3.19 Respond to decompression.

3.7.2.3.19.1 Detect rapid decompression.

The SM shall detect a decompression of greater than 1.0 psi per hour (52 mm Hg per hour). The SM shall activate a Class I alarm for a RS detected decompression or based on notification of a decompression event from the USOS in accordance with SSP 50097, paragraph 3.4.1.1.1.

AGREED.

3.7.2.3.19.2 Isolate rapid decompression.

The SM shall isolate all RS modules by prevention of forced air circulation in and between modules, stop oxygen introduction from the water electrolysis unit, close all external vents, and activate the RS depressurization airflow sensor assemblies within 60 seconds of annunciation of a Class 1 depressurization alarm.

AGREED.

3.7.2.3.20 Respond to hazardous atmosphere.

The SM shall provide a 15 minute supply of portable emergency breathing capability per crewmember.

AGREED.

3.7.2.3.21 Maintain thermal conditioning.

3.7.2.3.21.1 Collect thermal energy.

The SM shall collect thermal energy from SM internal sources to maintain thermal conditioning.

AGREED.

3.7.2.3.21.2 Transmit thermal energy.

The SM shall transmit thermal energy to maintain thermal conditioning of the SM internal sources.

AGREED.

3.7.2.3.21.3 Dispose of thermal energy.

The SM shall dispose of thermal energy to maintain thermal conditioning of the SM.

AGREED.

3.7.2.3.22 Provide Crew Control Interface.

The SM shall provide the capability for crew interactive control of on–orbit ISS critical systems, caution and warning messages, and integrated plan functions using a portable U.S. laptop computer. Two computer receptacles shall be located in the SM that can be used by the portable U.S. laptop computer for crew interactive control.

AGREED.

3.7.2.3.23 Distribute time.

a. After activation of the USOS Station Management Control processor, the SM shall receive a time message from the USOS at a rate of 1 Hz.

b. The SM shall compare the current time from the USOS with the current SM time and make available the difference (the error offset) for collection by the USOS at a rate of 1 Hz.

c. The SM shall manage the RS internal distribution of time.

d. All commands and data sent to the USOS and received from the USOS shall be in accordance with SSP 50097 ICD, and will be transmitted across 1553 data buses in accordance with SSP 42121 ICD, paragraph 3.2.2.5.3.

AGREED.

3.7.2.3.24 Accommodate crew hygiene and wastes.

The SM shall provide facilities for personal hygiene and collection, processing, and disposal of crew metabolic waste. The SM shall accommodate collection, treatment, and disposal of menstrual discharge and associated absorbent material. The SM shall accommodate the collection, containment, and disposal of emesis. The SM shall accommodate internal disposal of external collected crew wastes. Crew hygiene accommodations shall support the crew member during post external cleanup. The SM shall accommodate the collection of fecal solids, liquids, gases, particulates, and the disposal of associated consumables materials.

The SM shall accommodate the collection and disposal of urine and associated consumable material. The SM shall accommodate personal grooming for crew skin care, shaving, hair grooming, and nail trimming. The SM shall accommodate collection processing and disposal of crew hygiene wastes, including soap, expectorants, hair, nail trimmings, and hygiene water. The SM shall accommodate whole body skin and hair cleansing.

AGREED.

3.7.2.3.25 Support radiation exposure monitoring.

The SM shall provide interfaces to support monitoring of crew exposure to radiation in accordance with SSP 50065, CHeCS to RS ICD.

AGREED.

3.7.2.3.26 Accommodate crew privacy.

The SM shall provide the crew with a private and personal space capable of light and sound isolation in order to support crew rest, sleep, and personal activities. Crew privacy shall be provided to facilitate don and doff of clothing.

AGREED.

3.7.2.3.27 Support crew personal items.

The SM shall provide storage volume for crew equipment and consumables.

AGREED.

3.7.2.3.28 Support housekeeping.

The SM design shall support routine cleaning, microbial sampling, and trash collection. The capture volumes for airborne particles shall be accessible for replacement or cleaning without dispersion of the trapped materials. The SM shall provide facilities for collection and isolation of trash. Collected trash shall be isolated, contained, and stored for ultimate disposal.

AGREED.

3.7.2.3.29 Support crew health.

The SM shall accommodate health care equipment and supplies according to SSP 50065, CHeCS to RS ICD.

AGREED.

3.7.2.3.29.1 Monitor crew health.

The SM shall accommodate equipment to monitor crew health according to SSP 50065, CHeCS to RS ICD.

AGREED.

3.7.2.3.29.2 Respond to crew illness or injury.

The SM shall accommodate a 610 mm (24 inch) diameter path for translation of an ill or injured crew member.

AGREED.

3.7.2.3.29.3 Provide preventive crew health care.

The SM shall accommodate equipment to support preventive crew health care according to SSP 50065, CHeCS to RS ICD.

AGREED.

3.7.2.3.29.4 Support microgravity countermeasures and exercise.

The SM shall support facilities for crew microgravity countermeasures.

AGREED.

3.7.2.3.30 Support food and water consumption and cleanup.

The SM shall provide facilities for food consumption and cleanup as specified in SSP 50094, paragraph 6.3.3. The SM shall provide ambient potable water and heated potable water.

AGREED.

3.7.2.3.31 Support food processing.

The SM shall provide ambient storage volume. Food storage for a minimum of one week shall be located in the area where food is processed and consumed. The SM shall provide the capability to rehydrate food. The SM shall provide the capability to heat food and liquids.

AGREED.

3.7.2.3.32 Provide food.

The SM shall provide food in accordance with the nutritional requirements identified in SSP 50094, paragraph 6.3.3.1.6.

AGREED.

3.7.2.3.33 Support internal crew restraint and mobility.

The SM shall support internal crew translation through the SM. Handholds and handrails shall be incorporated into the interior of the SM to facilitate the crew's mobility and stability.

a. Fixed or portable inside vehicular activity mobility aids shall be provided at the following locations:

(1) Mobility aids shall be placed around workstations, access hatches, doors, windows, and pressure hatches.

(2) Mobility aids shall be located at designated terminal points and direction change points on established crew translation paths.

(3) Crew mobility aid provisions shall be made for inside EVA suited operations.

(4) Translation and mobility handholds shall be located where the crewmember is protected from identified hazards.

(5) The orientation and locations of translation and mobility handholds shall be consistent with the crew tasks they are supporting.

b. Inside vehicular activity crew restraints shall be provided at the following locations:

(1) Restraints shall be provided at identified locations where crewmembers are expected to exert forces which cause the body to move in reaction.

(2) Provide personnel restraints at crew stations.

c. Inside vehicular activity personnel restraints shall comply with the following requirements:

(1) Restraint design shall eliminate muscular tension.

(2) The personnel restraint system shall be capable of on–orbit cleaning and repair.

(3) All fixed and portable internal vehicle handholds and handrails shall be designed to an ultimate load of 445 N (100 lbf) applied to any direction without failure or damage.

(4) When hook and loop fasteners are used as a restraint, the item to be restrained shall be equipped with the hook type fastener and the restraining surface shall be equipped with the loop type fastener.

d. The following requirements apply to all inside vehicular activity fixed and portable foot restraints:

(1) All foot restraints shall maintain foot position to allow the crewmember a complete range of motion (roll, pitch, and yaw).

(2) Inside vehicular activity foot restraints and covers shall allow ventilation to the feet.

(3) The foot restraint shall be capable of being removed for replacement/repair.

(4) Foot restraints shall be designed to withstand a tension load of 445 N (100 lbf) as a minimum. Foot restraints shall withstand a torsion load of 100 Nm (75 lbf) as a minimum with the torsion vector parallel to the floor.

e. All inside vehicle mobility paths shall comply with the following requirements:

(1) The minimum cross sectional dimensions of microgravity translation paths for one crewmember in light clothing shall be 65 cm.

(2) A minimum interior cross section dimension of 80 cm shall be maintained to support equipment translation.

(3) Equipment exposed to the translation path shall be designed to withstand a design load of 556 N (125 lbf) and a minimum ultimate load of 778 N (175 lbf).

(4) Non–structural closures shall be capable of sustaining crew–imposed minimum design load of 556 N (125 lbf) and a minimum ultimate load of 778 N (175 lbf).

AGREED.

3.7.2.3.34 Control carbon dioxide.

3.7.2.3.34.1 Remove carbon dioxide.

The SM shall control the carbon dioxide partial pressure in the atmosphere of the pressurized modules. The SM shall control the carbon dioxide partial pressure to a maximum crew member daily average of 0.10 psia (5.3 mm Hg). Carbon dioxide partial pressure peak levels shall be no greater than 0.147 psia (7.6 mm Hg). The SM shall remove 2.2 lbm/person/day (1 kg per person per day) carbon dioxide from the atmosphere to support human metabolic needs for three crew members for normal operations and six crew members for the crew exchange operation. The SM shall monitor atmospheric carbon dioxide levels over a range of 0 to 0.48 psia (0 to 25 mm Hg) with an accuracy of +/–0.038 psi (2 mm Hg).

AGREED.

3.7.2.3.34.2 Dispose of carbon dioxide.

The SM shall dispose of waste carbon dioxide removed from the atmosphere.

AGREED.

3.7.2.3.35 Control gaseous contaminants.

3.7.2.3.35.1 Remove gaseous contaminants.

a. The SM habitable atmosphere shall be maintained below Table V SMAC levels for crew health purposes.

b. The SM shall have control capability to meet Table VI removal rates.

c. The SM shall accommodate U.S. provided air monitoring equipment in accordance with SSP 50065, CHeCS to RS ICD.

AGREED.

3.7.2.3.35.2 Dispose of gaseous contaminants.

The SM shall dispose of trace gases removed from the atmosphere.

AGREED.

3.7.2.3.36 Control airborne particulate contaminants.

3.7.2.3.36.1 Remove airborne particulate contaminants.

The SM shall limit the atmosphere particulate level of the SM atmosphere to 0.15 milligrams per cubic meter for particles 0.5 to 300 microns in size.

AGREED.

3.7.2.3.37 Control airborne microbial growth.

3.7.2.3.37.1 Remove airborne microbes.

The SM shall limit daily average of the airborne microbes in the SM atmosphere to less than 1000 CFU per cubic meter (Current Russian capabilities can limit airborne microbes to 500 CFU per cubic meter for bacteria and to less than 100 CFU per cubic meter for fungi). The RS shall support microbial monitoring in its modules using both U.S. and Russian equipment in accordance with SSP 50065 ICD.

AGREED.

3.7.2.3.38 Provide water for crew use.

3.7.2.3.38.1 Supply water for potable use.

The SM shall provide for up to six crewmembers an average of 5.5 lbm per person per day (2.5 kg per person per day) of potable, including an average of 1.1 lbm/person/day (0.5 kg/person/day) of water in the food, for food rehydration, consumption, and oral hygiene.

AGREED.

3.7.2.3.38.2 Supply water for hygiene use.

a. From the activation of the Service Module to the activation of the LSM:

The SM shall provide an average of 1.1 lbm per person per day (0.5 kg per person per day) of water for hygiene use for 3 crewmembers.

b. After activation of the LSM:

The SM and LSM combined shall provide an average of 1.1 lbm/person/day (.5 kg/person/day) of water for hygiene use for up to six crewmembers.

AGREED.

3.7.2.3.38.3 Waste water management.

a. Waste water from condensate shall be collected, processed, and returned to the potable water system.

b. From the activation of the Service Module through to the activation of the Life Support Module:

The SM shall collect and dispose of an average of 1.2 Kg per person per day (2.64 lbm per person per day) of urine.

c. After activation of the Life Support Module:

The SM has no requirement to collect and dispose of urine.

AGREED.

3.7.2.3.38.4 Monitor water quality.

a. Water provided for food rehydration, consumption, and oral hygiene shall be of potable quality as defined in Table VI–A. Water provided for hygiene use shall be of hygiene quality as defined in Table VI–A

b. The SM shall accommodate U.S. provided water monitoring equipment in accordance with SSP 50065, CHeCS to RS ICD. The SM shall provide manual sample ports to facilitate off line monitoring and analysis of processed water. The SM shall periodically provide water for archiving and analysis.

AGREED.

3.7.2.3.39 Provide direct visual access.

The SM shall provide external direct visual access from station interior to station exterior to the crew for recreational and scientific purposes.

AGREED.

3.7.2.3.40 Provide remote internal visual access.

3.7.2.3.40.1 Create video signal.

The SM shall create a video signal in SECAM D, K format to allow internal visual access of station pressurized volume to crew and RS ground.

AGREED.

3.7.2.3.40.2 Reserved.

3.7.2.3.41 Transmit voice communications.

3.7.2.3.41.1 Transmit hardwire.

The SM shall support the transmission of internal voice communications to the USOS and the transmission of internal voice communications between the crew members on the RS on–orbit element.

The SM shall transmit the voice communications to the USOS and to the RS on–orbit element.

The SM shall transmit to the RS on–orbit element a loud annunciation (paging signal) and caution and warning, and to the USOS, loud annunciation (paging signal).

The characteristics of the transmission of voice communication and loud annunciation (paging signal) for the USOS shall be in accordance with SSP 42121 ICD, paragraphs 3.2.2.5.1.

AGREED.

3.7.2.3.42 Receive voice communication.

3.7.2.3.42.1 Receive hardwire.

The SM shall support the reception of internal voice communications from the USOS and the reception of internal voice communications between the crew members on the RS on–orbit element.

The SM shall receive the voice communications from the USOS and from the RS on–orbit element.

The SM shall receive from the RS on–orbit element a loud annunciation (paging signal) and caution and warning and receive from the USOS a loud annunciation (paging) signal only.

The characteristics of the reception of voice communication and loud annunciation (paging signal) from the USOS shall be in accordance with SSP 42121 ICD, paragraphs 3.2.1.5.1 and 3.2.2.5.1.

AGREED.

3.7.2.3.43 Determine state vector and attitude.

From activation of the SM:

The SM shall determine the on–orbit Space Station position, velocity, attitude, and attitude rate knowledge to support attitude control, translation control, and pointing of RS systems.

AGREED.

3.7.2.3.43.1 Provide State vector and attitude.

From the activation of the USOS MDMs in the USOS Lab Module:

a. The SM shall provide the USOS with position, velocity, attitude, and attitude rate data at a rate of 1 Hz.

b. The SM shall provide the USOS with position and velocity translation data with a position accuracy of at least 2953 feet (900 meters) (3 sigma root sum square error), and with a semi–major axis 984 feet (300 meters) (3 sigma).

c. Reserved.

d. The SM shall provide the USOS with attitude of the space Station Analysis Coordinate System with respect to the J2000 and LVLH reference frames, with an accuracy of 0.5 degree (3

sigma for each of three axes) for all operational attitudes of the Space Station.

e. The SM shall provide the USOS with the inertial attitude rate of the ISS, in the Space Station Analysis Coordinate System reference frame, with an accuracy of 0.01 degree per second (3 sigma for each of three axes).

f. The SM shall correct for the angular misalignment between the SM reference frame and the U.S. Space Station Analysis Coordinate System, as specified in SSP 50094, section 12.

AGREED.

3.7.2.3.43.2 Capability: Generate pointing & support data.

From activation of the USOS MDMs in the USOS Lab Module:

The SM shall provide the USOS (in accordance with SSP 50097) the identifier of up to 3 active payloads (or robotics subsystem components), and with positions of their centers of mass at a cycle rate of 0.1 Hz.

AGREED.

3.7.2.3.44 Maintain attitude – nonpropulsive.

a. From the activation of the RS non–propulsive effectors:

(1) The SM shall be able to maintain a TEA using only nonpropulsive effectors.

(2) The SM shall be able to maintain LVLH and inertial attitudes using only nonpropulsive effectors (this requirement does not size the nonpropulsive effectors and depends on available momentum storage).

(3) The SM shall monitor the nonpropulsive effector's momentum state relative to saturation levels and provide notification to the RGS and crew of excessive momentum levels during nonpropulsive attitude control.

(4) The SM shall maintain attitude stability to 5.0 degrees per axis per orbit (total attitude variation in any single orbit interval of time) when controlling to TEA.

(5) The SM MCS shall maintain attitude within +/–3 degrees per axis in the SM reference frame when controlling to a LVLH or inertial attitude with nonpropulsive effectors.

(6) The SM shall maintain the attitude rates to within +/–0.015 degrees per second per axis with respect to the commanded reference frame when controlling with nonpropulsive effectors.

(7) The SM shall execute attitude control commands originating from the RGS or crew when using nonpropulsive effectors.

(8) The SM shall notify the RGS and crew of failure to converge to the commanded attitude.

(9) The SM shall have the capability to accept constant inertial, LVLH and Analysis Coordinate Frame angular momentum commands from the RGS or crew. The achieved angular momentum variation shall be less than 250 ft–lb–sec/axis peak to peak in any 10 orbit period relative to the command.

(10) The SM shall maintain Space Station attitude within +/– 15 degrees in yaw and roll, +15 to –20 degrees in pitch with respect to (0, 0, 0) yaw, pitch, and roll orientation in the LVLH

reference frame to meet thermal constraints and power generation requirements.

(11) When mated with the Orbiter, the SM shall maintain Space Station attitude within +/– 15 degrees in roll and yaw, + 25 to 0 degrees in pitch with respect to (0,0,0) yaw, pitch, and roll orientation in the LVLH reference frame.

b. From activation of the USOS MDMs in the USOS Lab Module:

(1) The SM shall monitor the RS nonpropulsive effector's momentum state relative to saturation levels and provide notification to the USOS of excessive momentum levels during nonpropulsive attitude control.

(2) The SM shall execute attitude maneuver abort commands as specified in SSP 50097 ICD originating from the USOS when using nonpropulsive effectors.

(3) The SM shall notify the USOS of failure to converge to the commanded attitude.

AGREED.

3.7.2.3.45 Support uplinked data.

3.7.2.3.45.1 Receive uplinked data.

The SM shall provide the capability to receive a data stream (commands, voice, television, and navigation) uplinked from the RS ground segment. The SM shall provide the capability to receive the data stream uplinked from the USGS which has been relayed through the RGS for transmitting, without the television information, to the USOS.

AGREED.

3.7.2.3.45.2 Prepare uplinked data for on–board distribution.

The SM shall de–multiplex and convert the uplinked data to formats compatible with the on–orbit Space Station.

AGREED.

3.7.2.3.45.3 Distribute uplinked data.

The SM shall distribute uplinked audio, video, and digital data within the SM and to the interfaces with other on–orbit Space Station segments. (Video is not transmitted to the USOS).

AGREED.

3.7.2.3.46 Provide data for downlink.

3.7.2.3.46.1 Prepare data for downlink.

The SM shall acquire audio, video and digital data (to include telemetry and navigation data) for the downlink from sources within the SM and from interfaces with other on–orbit Space Station segments.

AGREED.

3.7.2.3.46.2 Transmit data for downlink.

The SM shall transmit the data streams to the RS ground segment. The SM shall transmit the ISS audio, video, and digital data (to include telemetry and navigation data) to the USGS relayed

through the RGS.

AGREED.

3.7.2.3.47 Support internal equipment translation.

The SM shall provide handles, or structural, or mechanical parts suitable for gripping and tethering equipment that requires moving in accordance with SSP 50094, paragraph 6.4.2.

AGREED.

3.7.2.3.48 Support internal equipment removal and replacement.

The SM shall provide crew and equipment restraints capable of being located throughout the SM pressurized habitable volume to support removal and replacement of ORUs and in situ maintenance.

AGREED.

3.7.2.3.49 Support internal equipment identification.

The SM shall provide inventory labels on portable equipment and ORUs to maintain an on–orbit inventory to support logistics/resupply operations.

AGREED.

3.7.2.3.50 Support internal equipment restraint.

The SM shall provide equipment restraints for every item that is not permanently attached to the SM structure.

AGREED.

3.7.2.3.51 Support orbital replaceable unit repair.

The SM shall support limited repair of selected ORUs by providing a work area and tools sufficient to mechanically disassemble, effect repair re–assemble and checkout. Isolation of failed ORUs shall be provided by ground personnel and/or crew procedure.

AGREED.

3.7.2.3.52 Store internal equipment.

The SM shall provide storage volume to store spare internal ORUs, tools, diagnostic equipment, and maintenance supplies.

NOTE: Cargo items delivered on the ATV are stored on the US Segment.

AGREED.

3.7.2.3.53 Support external vehicle input data for proximity operations.

3.7.2.3.53.1 Receive external vehicle input data.

The SM shall receive audio, video, and ”Display” (KURS operational) data from the external Soyuz vehicle during approach and docking, and video and ”Display” (KURS operational) data from the external unmanned vehicles during approach and docking.

AGREED.

3.7.2.3.53.2 Prepare external input data for on–board distribution.

The SM shall process and distribute the external input audio, video, and ”Display” data from the Soyuz vehicle and shall process and distribute the external video and ”Display” data from the unmanned vehicles.

AGREED.

3.7.2.3.54 Provide data for external vehicles for proximity operations.

3.7.2.3.54.1 Prepare data for external vehicles.

The SM shall prepare and process audio for transmission to the Soyuz vehicle.

AGREED.

3.7.2.3.54.2 Transmit data to external vehicles.

The SM shall transmit audio to the detached Soyuz vehicle.

AGREED.

3.7.2.3.55 Support external vehicle wave–off.

3.7.2.3.55.1 Determine external vehicle wave–off.

The SM and RS ground shall determine via SM system and Russian external vehicle status data when it is no longer safe for the external vehicle to dock with the on–orbit Space Station. The current capability uses the Russian ground segment as the primary decision authority.

AGREED.

3.7.2.3.55.2 Communicate wave–off to external vehicle.

The SM shall provide a means to communicate to a Russian external vehicle when it is no longer safe to proceed with docking.

AGREED.

3.7.2.3.56 Execute translation maneuvers.

3.7.2.3.56.1 Execute maneuver guidance.

a. From activation of the SM:

(1) The SM shall control the on–orbit Space Station invariant semimajor axis to within 1000 feet (3 sigma) of the targeted value at the end of the reboost maneuver (when the ATV is docked to the SM, the RS shall send the commands necessary to support this requirement but, its successful execution is the responsibility of the ATV).

(2) The SM shall be capable of executing single burn maneuvers commanded by the crew (when the ATV is docked to the SM, the RS shall send the commands necessary to support this requirement but, its successful execution is the responsibility of the ATV).

(3) The SM shall be capable of controlling the on–orbit Space Station orbit by executing open

loop maneuver sequences provided by RGS or crew (when the ATV is docked to the SM, the RS shall send the commands necessary to support this requirement but, its successful execution is the responsibility of the ATV).

(4) When a crew installed matching unit provides connection between the SM and the CV, the SM shall be capable of transmitting open loop maneuver sequences to the CV.

b. From activation of the USOS MDMs in the USOS Lab Module:

The SM shall be capable of controlling the on–orbit Space Station orbit by executing open loop maneuver sequences originating from the RGS and provided to the RS via the USGS and USOS.

AGREED.

3.7.2.3.56.2 Execute translation thrust.

a. From activation of the SM:

(1) The SM shall be capable of executing a translational maneuver of up to 5 feet per second within ninety minutes of being commanded to execute the maneuver within the functional responsibilities for the SM as shown in Figures 4–B, 4–C, and 4–D (when the ATV is docked to the SM, the RS shall send the commands necessary to support this requirement but, its successful execution is the responsibility of the ATV).

(2) The SM shall have the capability to terminate a maneuver execution (SM or CV on SM aft port) on command originating from the RGS or crew within 1.0 second of receipt of the command excluding the time of thrust tail off.

(3) The SM shall control translation maneuver initiation and termination times to within 1.0 second of the targeted values, excluding the time of thrust build up or tail off (when the ATV is docked to the SM, the RS shall send the commands necessary to support this requirement but, its successful execution is the responsibility of the ATV).

(4) The SM in combination with the FGB shall provide a propellant reserve to perform a reboost by the SM to an altitude that will allow at least 360 days orbital decay to an altitude of 278 Km (150 n.mi.) under nominal operations.

(5) The SM shall have the capability to determine total propellant levels in the SM tanks and report them to the RGS and crew.

(6) The SM shall have the capability to control the ISS attitude during translational maneuvers (when the ATV is docked to the SM, the RS shall send the commands necessary to support this requirement but, its successful execution is the responsibility of the ATV).

(7) The SM shall have the capability to execute translational maneuver commands originating from the RGS or crew (when the ATV is docked to the SM, the RS shall send the commands necessary to support this requirement but, its successful execution is the responsibility of the ATV).

(8) Reserved.

(9) The SM shall be able to inhibit and enable individual SM thrusters by direct command originating from the RGS or crew.

(10) The SM shall send propulsive effector status data to the RGS and crew.

(11) The SM propulsion system shall have performance as shown in Table VI–A.

(12) Reserved.

(13) The SM shall be capable of feeding propellants directly to the CV thrusters at a pressure and flowrate sufficient to perform translation maneuvers.

(14) The SM shall have the capability to support propellant feed from FGB propellant tanks to the CV thrusters at a pressure and flowrate sufficient to perform translational maneuvers.

b. From activation of the USOS MDMs in the USOS Lab Modules:

(1) The SM shall have the capability to terminate a translation maneuver execution (SM or CV on SM aft port) in response to an abort on command originating from the USOS within 1.0 second of receipt of the command excluding the time of thrust tail off (when the ATV is docked to the SM, the RS shall send the commands necessary to support this requirement but, its successful execution is the responsibility of the ATV).

(2) The SM shall have the capability to determine total propellant levels in the SM tanks and report them to the USOS.

(3) The SM shall have the capability to execute translational maneuver abort commands originating from the USOS (excluding the First–Generation CV).

(4) The SM shall be able to inhibit and enable SM individual thruster, or groups of progress thrusters by direct command originating from the USOS.

(5) The SM shall send propulsive effector status data to the USOS.

c. When a crew installed matching unit provides connection between the CV and the SM:

(1) The SM shall have the capability to inhibit and enable groups of CV thrusters.

(2) The SM shall send CV propulsive effector data (status of thruster operations – on/off) to the RGS and crew.

(3) The SM shall have the capability of executing translational maneuvers by issuing thruster on/off commands to the CV small thrusters (when the ATV is docked to the SM, the RS shall send the commands necessary to support this requirement but, its successful execution is the responsibility of the ATV).

(4) The SM shall have the capability of issuing translational maneuver commands to the CV (when the ATV is docked to the SM, the RS shall send the commands necessary to support this requirement but, its successful execution is the responsibility of the ATV).

AGREED.

3.7.2.3.57 Control attitude – propulsive.

a. From activation of the SM:

(1) The SM shall control attitude rates to within +/–0.20 degrees per second per axis when translational maneuvers are performed by the SM when performing translation maneuvers with CV small thrusters (when the ATV is docked to the SM, the RS shall send the commands necessary to support this requirement but, its successful execution is the responsibility of the ATV).

(2) The SM MCS shall control transient attitude rates to within +/– 0.50 degrees/second in three axes when translation maneuvers are performed by the SM or CV when performing translation maneuvers with CV small thrusters (when the ATV is docked to the SM, the RS shall send the commands necessary to support this requirement but, its successful execution is the responsibility of the ATV).

(3) The transient rates shall not exceed the steady–state value for more than 30 seconds.

(4) The SM shall have the capability to control to TEA, LVLH, and inertial attitudes using propulsive effectors (when the ATV is docked to the SM, the RS shall send the commands necessary to support this requirement but, its successful execution is the responsibility of the ATV).

(5) The SM shall monitor convergence of the actual attitude relative to the commanded attitude and provide notification to the RGS and crew of failure to converge (when the ATV is docked to the SM, the RS shall send the commands necessary to support this requirement but, its successful execution is the responsibility of the ATV).

(6) The SM shall execute attitude control commands originating from the RGS, or crew when using propulsive effectors.

(7) The SM shall monitor propellant usage relative to the predicted propellant usage and provide notification to RGS and crew of excessive propellant usage during propulsive attitude control (when the ATV is docked to the SM, the RS shall send the commands necessary to support this requirement but, its successful execution is the responsibility of the ATV).

(8) The SM shall provide dynamic stability to perform docking and undocking with the Orbiter and other external vehicles at an altitude of 278 kilometers (150 nautical miles) or above (when the ATV is docked to the SM, the RS shall send the commands necessary to support this requirement but, its successful execution is the responsibility of the ATV).

(9) The SM shall provide attitude control capability during all phases of Orbiter and other external vehicles approach and departure operations, and the capability to return to the desired attitude after completion of Orbiter and other external vehicles docking and undocking operations (when the ATV is docked to the SM, the RS shall send the commands necessary to support this requirement but, its successful execution is the responsibility of the ATV).

(10) The SM shall support docking operations with the Shuttle for the time period of two orbital revolutions.

(11) The SM MCS's contribution to the peak to peak angular motion (dynamic error range) shall be within +/–0.8 degrees per axis in the SM reference frame during Orbiter approach and station–keeping.

(12) The SM MCS shall maintain the attitude knowledge of the SM reference frame relative to the true LVLH coordinates to within 0.5 degrees per axis during Orbiter docking operations.

(13) The SM MCS shall maintain angular rate of the SM body axes relative to the true LVLH coordinates to within 0.04 degrees per second per axis during Orbiter approach and station–keeping (when the ATV is docked to the SM, the RS shall send the commands necessary to support this requirement but, its successful execution is the responsibility of the ATV).

(14) The SM MCS shall maintain attitude within +/– 3.0 degrees/axis in the SM reference frame when controlling to a LVLH or inertial attitude with propulsive effectors or with nonpropulsive effectors assisted by propulsive effectors (when the ATV is docked to the SM, the RS shall send the commands necessary to support this requirement but, its successful execution is the responsibility
of the ATV).

(15) Reserved.

(16) The SM shall maintain attitude within +/– 10.0 degrees of the TEA attitude in the SM reference frame (when the ATV is docked to the SM, the RS shall send the commands necessary to support this requirement but, its successful execution is the responsibility of the ATV).

(17) The SM shall control attitude rates to within +/– 0.03 degree/sec for the X–axis and +/– 0.015 degrees per second for the Y– and Z– axes with respect to the commanded attitude when not performing translational or rotational maneuvers (when the ATV is docked to the SM, the RS shall send the commands necessary to support this requirement but, its successful execution is the responsibility of the ATV).

(18) The SM shall provide attitude control of the fully mated Space Station/Orbiter/other external vehicles configurations (when the ATV is docked to the SM, the RS shall send the commands necessary to support this requirement but, its successful execution is the responsibility of the ATV).

(19) The SM shall be able to inhibit and enable individual thrusters by direct command originating from RGS or crew.

(20) The SM shall control the attitude and attitude rates while executing maneuvers to alter the on–orbit Space Station attitude (when the ATV is docked to the SM, the RS shall send the commands necessary to support this requirement but, its successful execution is the responsibility of the ATV).

(21) The SM shall be capable of an angular maneuver rate of at least 0.10 degrees per second per axis.

(22) The SM shall maintain Space Station attitude within +/– 15 degrees in yaw and roll, +15 to –20 degrees in pitch with respect to (0,0,0) yaw, pitch, and roll orientation in the LVLH reference frame to meet thermal constraints and power generation requirements and to minimize the use of propellant (when the ATV is docked to the SM, the RS shall send the commands necessary to support this requirement but, its successful execution is the responsibility of the ATV).

(23) The SM shall provide the capability to hold the current attitude of the SM reference frame with respect to LVLH at the instant that this command is received (when the ATV is docked to the SM, the RS shall send the commands necessary to support this requirement but, its successful execution is the responsibility of the ATV).

(24) The SM shall provide a mate/demate indicator to the USOS when an external vehicle mates/demates with the RS.

(25) The SM Motion Control System's contribution to the peak to peak angular motion (dynamic error range) shall be within 4.0 degrees peak to peak per axis in the SM reference frame after Orbiter departure (after activation of the MCS attitude control).

(26) The SM MCS shall maintain angular rate of the SM body axes relative to the true LVLH coordinates to within 0.1 degrees per second per axis after Orbiter departure (after activation of the MCS attitude control) (when the ATV is docked to the SM, the RS shall send the commands necessary to support this requirement but, its successful execution is the responsibility of the ATV).

(27) The SM shall be capable of performing attitude control using one set of propellant tanks while the other set is resupplied with propellant from either a CV propellant resupply system or the FGB propulsion system (when the ATV is docked to the SM, the RS shall send the commands necessary to support this requirement but, its successful execution is the responsibility of the ATV).

(28) The SM Motion Control System's contribution to the peak to peak angular motion (dynamic error range) shall be within 4.0 degrees peak to peak per axis in the SM reference frame after a failed Orbiter docking and back away.

(29) The SM MCS shall maintain angular rate of the SM body axes relative to the true LVLH coordinates to within 0.1 degrees per second per axis after a failed Orbiter docking and back away (when the ATV is docked to the SM, the RS shall send the commands necessary to support this requirement but, its successful execution is the responsibility of the ATV).

(30) The SM shall provide attitude control when the CV is performing translational maneuvers with the CV small thrusters.

(31) When a crew installed matching unit provides connection between the CV small thrusters and the SM terminal computer, the SM shall be capable of issuing thruster on/off commands to CV small thrusters for attitude control.

(32) When mated with the Orbiter, the SM shall maintain Space Station attitude within +/_ degrees in roll and yaw , and +25 to 0 degrees in pitch with respect to (0,0,0) yaw, pitch and roll orientation in the LVLH reference frame.

b. From activation of the RS nonpropulsive effectors:

(1) The SM shall control attitude rates to within +/– 0.015 degrees per second per axes with respect to the command attitude when not performing translational or rotational maneuvers.

c. From activation of the USOS MDMs in the USOS Lab Module:

(1) The SM shall monitor convergence of the actual attitude relative to the commanded attitude and provide notification to the USOS of failure to converge.

(2) The SM shall execute attitude maneuver abort commands originating form the USOS when using propulsive effectors.

(3) The SM shall monitor propellant usage relative to the predicted propellant usage and provide notification to USOS of excessive propellant usage during propulsive attitude control.

(4) The SM shall be able to inhibit and enable individual thrusters by direct command originating from the USOS.

(5) The SM shall send propulsive effector data to the USOS.

d. From activation of the SDMS on S0:

(1) The SM shall execute timed sequences of thruster firings to support structural testing.

AGREED.

3.7.2.3.58 Provide desaturation torque.

a. From the activation of the RS nonpropulsive effectors:

(1) The SM shall provide a torque using propulsive effectors when commanded by the crew or RGS for RS nonpropulsive effector desaturation (when the ATV is docked to the SM, the RS shall send the commands necessary to support this requirement but, its successful execution is the responsibility of the ATV.

(2) The SM shall have the capability to provide propulsive effector impulse data and status during desaturation activities to the RGS and crew.

(3) The SM shall have the capability to provide a torque with a specified thruster pulse pattern for use by its propulsive effectors when both a desaturation command for the RS nonpropulsive effectors is issued and the SSRMS is active.

b. from activation of the USOS MDMs in the USOS Lab Module:

(1) Reserved.

(2) The SM shall provide an indication of initiation of propulsive effector firings and propulsive effector status during desaturation activities to the USOS (when the ATV is docked to the SM, the RS shall send the commands necessary to support this requirement but, its successful execution is the responsibility of the ATV).

c. From activation of the US nonpropulsive effectors:

(1) The SM shall provide a torque using propulsive effectors when commanded by the USOS, crew, and RGS for RS and USOS nonpropulsive effector desaturation (when the ATV is docked to the SM, the RS shall send the commands necessary to support this requirement but, its successful execution is the responsibility of the ATV).

(2) The SM shall provide an indication of initiation of propulsive effector firings and status of propulsive effectors during desaturation activities to the USOS and crew (when the ATV is docked to the SM, the RS shall send the commands necessary to support this requirement but, its successful execution is the responsibility of the ATV).

(3) The SM shall have the capability to provide a change in angular momentum within 20% magnitude and within +/–15 degrees angle when commanded by the USOS (when the ATV is

docked to the SM, the RS shall send the commands necessary to support this requirement but, its successful execution is the responsibility of the ATV).

(4) The SM shall have the capability to provide a torque with a specified thruster pulse pattern when desaturation is commanded for the U.S. nonpropulsive effectors by the USOS and crew (when the ATV is docked to the SM, the RS shall send the commands necessary to support this requirement but, its successful execution is the responsibility of the ATV).

d. From activation of the SM

The SM shall have the capability to store a thruster pulse pattern provided by the USOS, RGS, and crew for use by the RS to provide desaturation (when the ATV is docked to the SM, the RS shall send the commands necessary to support this requirement but, its successful execution is the responsibility of the ATV).

AGREED.

3.7.2.3.59 Provide depressurization capabilities.

The SM shall retain the capability (which may include the use of other RS modules) to perform the following functions after a depressurization event:

a. maintain a commanded attitude

b. perform reboost

c. maintain command and telemetry communications with the ground segment.

AGREED.

3.7.2.3.60 Communications with U.S. Airlock Orlan suits.

The SM shall support simultaneous transmission and reception of both voice and communications from the SM to no less than 2 Orlan–M suited crewmembers prior to their egress from the USOS Airlock when the U.S. Airlock hatches are either open or closed in accordance with SSP 42121, appendix I.

AGREED.

3.7.2.3.61 Support attitude control handover operations.

a. From activation of the USOS Stage 5A GN&C and C&C flight software:

1) The SM shall have the capability to accept manual transfer of control authority from the USOS.

2) The SM shall have the capability to support manual transfer attitude control authority to the USOS.

AGREED.

3.7.3 Reserved.

3.7.4 Reserved

3.7.5 Reserved

3.7.6 Soyuz Vehicle.

3.7.6.1 Purpose.

The purpose of the Soyuz vehicle is to provide crew delivery and return, including unplanned crew return.

AGREED.

3.7.6.2 Description.

The Soyuz vehicle provides for crew delivery and return, including unplanned crew return. The Soyuz vehicle is a self–contained spacecraft equipped with life support, C&T, guidance, and propulsive capability.

AGREED.

3.7.6.3 Physical characteristics.

3.7.6.3.1 Reserved.

3.7.6.3.2 Reserved.

3.7.6.3.3 Soyuz vehicle dimensional envelope.

The Soyuz vehicle dimensional envelope (approximate) is specified in Figure 13.

AGREED.

3.7.6.3.4 Soyuz vehicle body coordinate system.

The Soyuz vehicle body coordinate systems is shown in Figure 14.

AGREED.

3.7.6.3.5 Soyuz vehicle crew delivery and return.

3.7.6.3.5.1 Scheduled crew delivery and return.

The Soyuz vehicle design shall have the capacity for delivering and returning up to three (3) crew members.

AGREED.

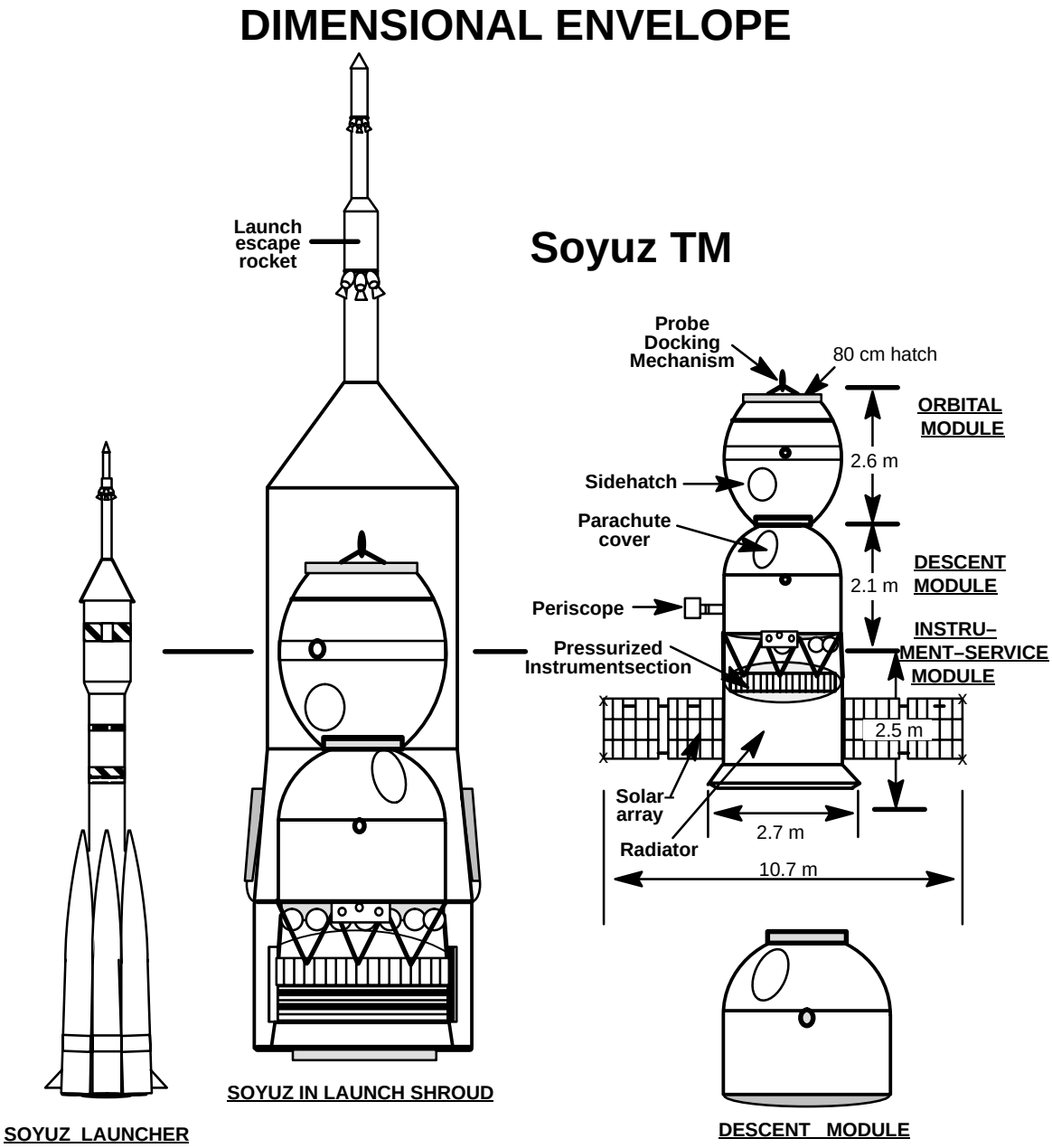

FIGURE 13. Soyuz vehicle dimensional envelope

NOTE:

ORIGIN: Rear center (center of de–orbit engine nozzle exit plane) of Instrument/Service Module.

ORIENTATION:

The X2, s/c axis is the centerline of the vehicle, with positive pointing in the direction of de–orbit engine firing.

The Z2, s/c axis points along the left hand solar array when facing the –X direction.

The Y2, s/c axis completes a right–handed system.

TYPE: Body–fixed right–handed Cartesian system. Rotates and translates with body.

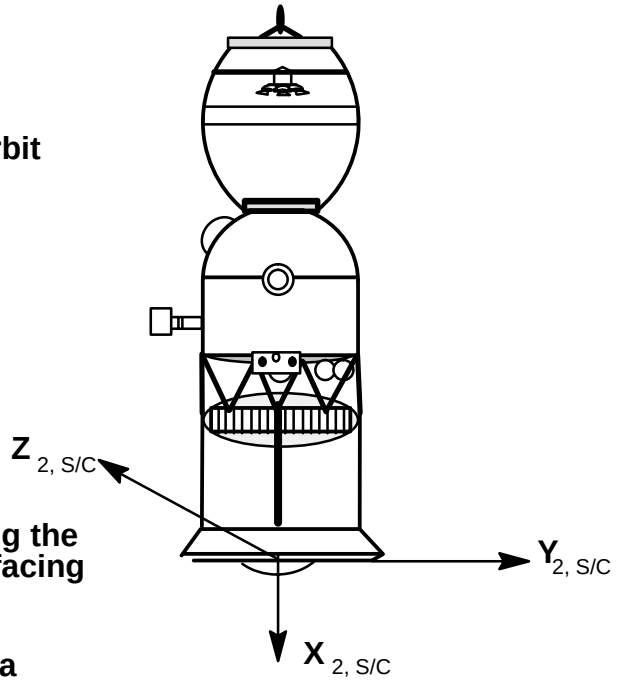

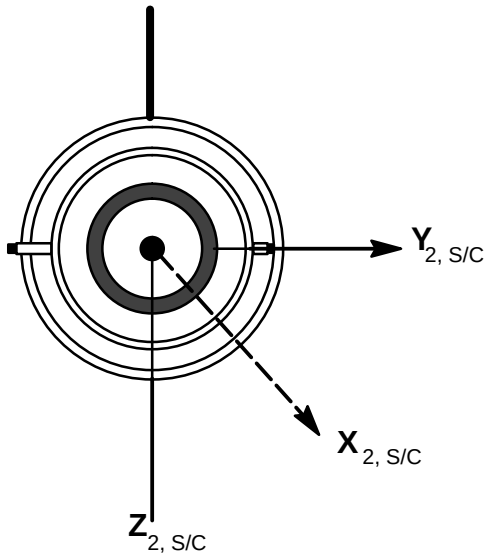

FIGURE 14. Soyuz vehicle body coordinate systems

3.7.6.3.5.2 Support unplanned crew return.

The Soyuz vehicle shall provide the capability for unplanned return of the crew. The Soyuz operations for the unplanned crew return will utilize procedures developed for the scheduled crew return.

AGREED.

3.7.6.3.6 Personnel size and mass.

The Soyuz vehicle shall accommodate crew members whose size and mass are within the anthropometric limits in Table XIX–A. The standard measurements and the methods for taking the measurements are defined in Table XIX–B.

TABLE XIX–A. Soyuz Anthropometric Limits

Measurement and NASA Number	Unmodified Soyuz	Modified Soyuz
Maximum standing height (#805)	182 cm	190 cm
Minimum standing height (#805)	164 cm	150 cm
Maximum sitting height (in Soyuz seat)	94 cm	99 cm
Minimum sitting height (in Soyuz seat)	80 cm	80 cm
Maximum crew mass	85 kg	95 kg
Minimum crew mass	56 kg	50 kg
Maximum foot length (#362)	none defined	29.5 cm
Maximum bideltoid breadth (#122)	none defined	52 cm
Maximum interscye breadth (#506)	none defined	45 cm
Maximum hip breadth, sitting (#459)	none defined	41 cm
Maximum thigh–to–thigh breadth, sitting (#859)	none defined	41 cm
Maximum chest circumference (#230)	112 cm	none
Minimum chest circumference (#230)	96 cm	none

Notes:

a) The numbers given with the measurements are from NASA–STD 3000 and are provided for reference only.

b) The crew seat provides a gap required for growth in weightlessness and assumes the use of counter–measures to limit growth which are at least as effective as the counter–measures used on the Mir Space Station.

c) The measures for sitting hip breadth (#459) and sitting thigh–to–thigh breadth (#859) are both taken to determine width in the mid–body region. Neither of these should exceed the limits in Table XIX–A.

AGREED.

TABLE XIX–B. Measurement Definition and Methods

Description	Figure
Stature or standing height (#805) (Figure 1) – the vertical distance from the floor or other reference surface to the top of the head – measured with the individual standing erect, the lower limbs vertical, and looking straight ahead	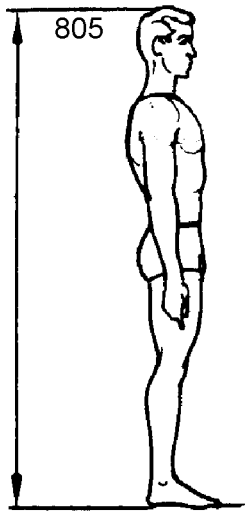 Figure 1. Stature
Bideltoid breadth (#122) (Figure 2) – the horizontal linear distance across the maximum lateral protusions of the right and left deltoid muscles – measured with the individual standing erect and arms hanging naturally at the sides Chest circumference (#230) (Figure 2) – the surface distance around the torso at the nipple level – measured with the individual standing erect, breathing normally, and with arms slightly abducted	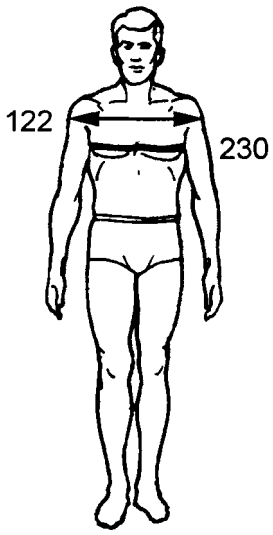 Figure 2. Bideltoid breadth (#122) and chest circumference (#230)

TABLE XIX–B. Measurement Definition and Methods – Continued

Description	Figure
Interscye breadth (#506) (Figure 3) – the linear distance across the back from one scye point to the other	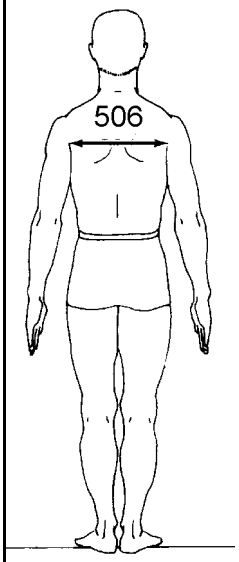 Figure 3. Interscye breadth
Hip breadth, sitting (#459) (Figure 4) – the maximum horizontal linear distance across the widest portion of the hips – measured with the individual sitting erect, knees flexed at 90 degrees, knees and thighs together, and feet flat on the floor	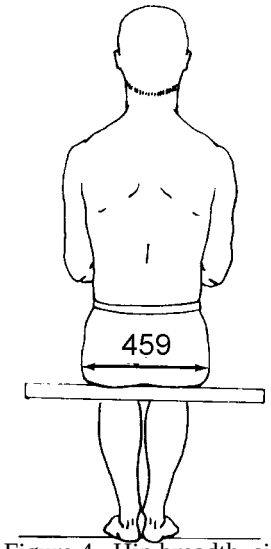 Figure 4. Hip breadth, sitting

TABLE XIX–B. Measurement Definition and Methods – Continued

Description	Figure
Thigh–to–thigh breadth, sitting (#859) (Figure 5) – the maximum horizontal linear distance from the most left lateral point of the thigh spread across the thighs to the most right lateral point of thigh spread – measured with the individual seated erect and thigh longitudinal axes parallel or as nearly parallel as possible	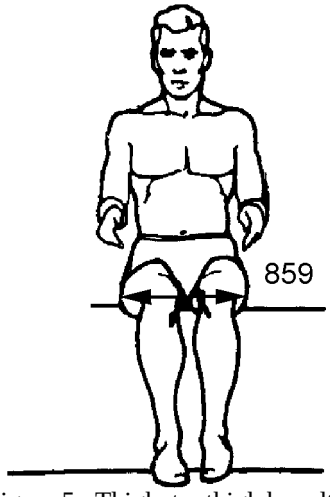 Figure 5. Thigh–to–thigh breadth, sitting
Foot length (#362) (Figure 6) – the maximum length of the foot, from the back of the heel to the tip of the most anterior toe, along the longitudinal axis of the foot – measured with the individual standing erect and his weight evenly distributed on both feet	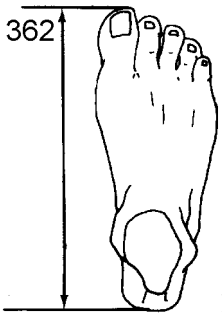 Figure 6. Foot length
Body mass (not shown) – the nude mass of the human body	

TABLE XIX–B. Measurement Definition and Methods – Continued

Description	Figure
Sitting height (in Soyuz stand) (Figure 7) – the linear dimension from the top of the head to the seat pan when positioned in a specially constructed stand – measured with the individual lying within the seat simulator as shown in Figure 7: 1) the back should be as straight and as relaxed as possible 2) the lower back, hips, and buttocks should be in contact with the seat surfaces 3) feet should be in contact with the footrest surface 4) the adjustable headrest should be positioned so that the lower edge is at the lower corner of the scapula 5) the measurement is taken from the vertex or crown of the head to the seat pan, parallel to the seat back	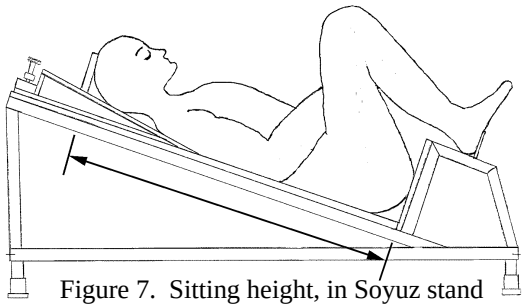 Figure 7. Sitting height, in Soyuz stand

Notes:
a) All measures are taken in a 1–g environment.
b) There should be minimal or no tissue compression in the measurement process.
c) Multiple measurements for stature and sitting height should be taken at various times throughout the day. Ideally, this would be at least twice during a normal working day: in the morning at the beginning of the workday (prior to engaging in any major physical activity) and in the evening at the end of the workday. The largest value measured for each variable should be used for determining fit.

AGREED.

3.7.6.4 Safety.

3.7.6.4.1 Internal volume touch temperature.

3.7.6.4.1.1 Internal volume high temperature.

Surfaces which are subject to contact with crewmember bare skin shall be below 104 degrees Fahrenheit (40 degrees Centigrade).

AGREED.

3.7.6.4.1.2 Internal volume low temperature.

Surfaces which are subject to contact with crewmember bare skin shall be above 41 degrees Fahrenheit (5 degrees Centigrade).

AGREED.

3.7.6.4.2 Single failure tolerance.

No single failure, except failures of structure, mechanisms, thermal protection system, pressure vessels, structure of the fluid lines, and engines shall result in the inability of the Soyuz vehicle to safely accomplish its mission.

AGREED.

3.7.6.4.3 Safe.

The Soyuz vehicle shall automatically or the crew shall manually safe out of tolerance conditions or functional performance that may manifest a catastrophic or critical hazard. The Soyuz vehicle shall automatically notify operators with results of automatic safing processes.

The Soyuz vehicle shall provide the capability for termination (automatic or RGS commanded) of thruster firings upon detection of failure conditions.

AGREED.

3.7.6.4.4 Computer control of hazardous functions.

Computer control of hazardous functions with specific hardware and software safety implementation requirements shall be in accordance with the requirements of SSP 50094, section 9.9.1.

AGREED.

3.7.6.4.5 Hazards during depressurization.

Soyuz vehicle equipment located in pressurized volumes shall be capable of withstanding the differential pressure of depressurization, repressurization and the depressurized condition within the range of
550 – 770 mm HG (10.6 – 14.9 psia) without resulting in a hazard or failure propagation.

AGREED.

3.7.6.4.6 Hatch opening.

The Soyuz vehicle shall provide total pressure and temperature inside the habitable compartments to the crew and the Russian Ground Segment prior to hatch opening when attached to the RS.

AGREED.

3.7.6.5 Capabilities.

The requirements in this section represent current Soyuz vehicle (SOYUZ TM) capabilities.

AGREED.

3.7.6.5.1 Control atmospheric pressure.

3.7.6.5.1.1 Control total pressure.

The Soyuz vehicle habitable volumes environment shall be compatible with a total pressure of 734 to 770 mm Hg (14.2 to 14.9 psia) while attached to the ISS.

AGREED.

3.7.6.5.1.2 Control oxygen partial pressure.

The Soyuz vehicle habitable volumes environment shall be compatible with an oxygen partial pressure of 146 to 178 mm Hg (2.83 to 3.35 psia) while attached to the ISS.

AGREED.

3.7.6.5.1.3 Equalize pressure.

The Soyuz TM and RS shall jointly provide a means to equalize pressure between the Soyuz vehicle and the Station when attached.

AGREED.

3.7.6.5.2 Maintain thermal conditioning.

The Soyuz vehicle shall maintain thermal conditioning of the Soyuz vehicle internal systems while attached. A combination of passive and active thermal control (which may include air, electrical heaters, and fluid loop) will be used.

AGREED.

3.7.6.5.2.1 Thermal control system fluid standards.

The Soyuz vehicle fluid standards shall be in accordance with SSP 50094, paragraph 4.2.3.

AGREED.

3.7.6.5.3 Control atmosphere temperature.

The Soyuz vehicle habitable volumes environment shall be compatible with a temperature of 18 to 28 degrees C (64 to 82 degrees F) while attached to the ISS.

AGREED.

3.7.6.5.4 Control atmosphere moisture.

The Soyuz vehicle habitable volumes environment shall be compatible with a dew point of 4.4 to 14.0 degrees C (40 to 57 degrees F) while attached to the ISS.

AGREED.

3.7.6.5.5 Circulate atmosphere.

The Soyuz vehicle habitable volumes environment shall be designed in accordance with a ventilation of at least 0.05 meters per second (10 feet per minute) while attached.

AGREED.

3.7.6.5.6 Support food and water consumption.

The Soyuz vehicle shall provide sufficient food and drinking water supplies for the crew.

AGREED.

3.7.6.5.7 Control carbon dioxide.

The Soyuz vehicle habitable volumes environment shall be compatible with a carbon dioxide partial pressure of 0 to 7.6 mm Hg (0 to 0.147 psia) while attached to the ISS.

AGREED.

3.7.6.5.8 Provide data for downlink.

3.7.6.5.8.1 Transmission of subsystem status while attached to RS.

The Soyuz vehicle shall provide the capability for transmission of the vehicle system status telemetry to the Russian ground segment while attached to the RS when in view of the Russian ground stations.

AGREED.

3.7.6.5.8.2 Soyuz vehicle readiness information.

The Soyuz vehicle shall provide a limited set of low rate telemetry data through the docking mechanism while attached.

AGREED.

3.7.6.5.8.3 Vehicle operational support.

During the Soyuz vehicle attached on–orbit operations, the MCC–M shall confirm operational status; analyze the vehicle performance to detect malfunctions, failures, or performance degradation that may jeopardize crew safety; and support malfunction analysis, resolution and reconfirm operational status.

AGREED.

3.7.6.5.9 Support crew delivery and return.

3.7.6.5.9.1 Environment of habitable volumes.

The Soyuz vehicle shall provide habitable volume environments in accordance with the following:

Parameter	Units	Operational Detached	Entry and Landing	Post Landing
CO2 Partial Pressure	mm Hg	0 to 7.6	0 to 7.6	0 to 15.0
	psia	0 to 0.147	0 to 0.147	0 to 0.290
Temperature	Deg C	18.3 to 26.7*	15.6 to 32.2	See Note 1
	Deg F	65 to 80*	60 to 90	
Dew Point	Deg C	4.4 to 21.1	4.4 to 21.1	See Note 1
	Deg F	40 to 70	40 to 70	
Ventilation	meters/sec	>/= 0.05	>/= 0.05	See Note 1
	feet/minute	>/= 10	>/= 10	
Oxygen Partial Pressure	mm Hg	155 to 185	155 to 185	118 to 185
	psia	3.00 to 3.58	3.00 to 3.58	2.28 to 3.58
Total Pressure	mm Hg	690 to 800	690 to 800 **	Ambient Pressure
	psia	13.3 to 15.47	13.3 to 15.47	Ambient Pressure

Note 1 – Post landing, the egress hatch may be opened to enhance crew comfort.
* Transient temperature excursions as low as 59 degrees F (15 degrees C) for up to three hours are acceptable.
**Below parachute deployment altitude, pressure will be equalized to ambient.

AGREED.

3.7.6.5.9.2 Provide translation path.

The Soyuz vehicle shall accommodate a 610 mm (24 inch) diameter hatch for translation of an ill or injured crew member.

AGREED.

3.7.6.5.9.3 Launch and delivery.

3.7.6.5.9.3.1 Execute Translation Maneuvers.

a. The Soyuz TM shall have the capability to determine propellant consumption in the Soyuz propellant tanks and report it to the RGS and crew.

b. The Soyuz TM shall have the capability to execute translational maneuver commands originating from the crew while attached. This capability will be limited to cases where adequate propellant is available.

AGREED.

3.7.6.5.9.3.2 Proximity Operations.

3.7.6.5.9.3.2.1 Automated collision avoidance maneuvers.

The Soyuz TM shall provide automatic collision avoidance maneuver capability, to prevent inadvertent collision with the ISS when within 1 km of the ISS, in the event of termination of proximity operations or docking by the onboard software or RGS. Soyuz crew shall have capability to provide manual collision avoidance.

AGREED.

3.7.6.5.9.3.2.2 Mission planning – rendezvous and docking.

The Soyuz vehicle software and RGS mission planning shall produce Soyuz rendezvous and docking reference profiles that as a minimum provide the following safety features:

a. The Soyuz vehicle final rendezvous trajectories to ISS altitude shall target a point out –of–plane such that if no further maneuvers were conducted, the approaching vehicle would pass safely by the ISS based on 3 sigma trajectory dispersions.

b. Rendezvous and proximity operations trajectory shall remain outside of a 400 m ”keep out zone” until start of the fly–around phase (Excludes fly–around for relocation of vehicles).

AGREED.

3.7.6.5.9.3.2.3 Support external vehicle to ISS relative navigation.

The Soyuz vehicle shall accommodate cooperative measurement systems to perform rendezvous with the ISS.

AGREED.

3.7.6.5.9.3.3 Soyuz vehicle docking indication.

The Soyuz vehicle shall provide an indication of the docking status to the Soyuz crew and Russian Ground Segment during docking operations.

AGREED.

3.7.6.5.9.3.4 Soyuz vehicle voice communications.

The Soyuz vehicle shall provide for voice communications with the RS and the Russian Ground Segment (when within view) during rendezvous and docking operations.

AGREED.

3.7.6.5.9.3.5 Soyuz vehicle video transmission.

The Soyuz vehicle shall provide for transmission of video to the RS (when within communications range) and the Russian Ground Segment (when within view) during the Soyuz vehicle approach and docking.

AGREED.

3.7.6.5.9.3.6 Docking mechanism and contact conditions.

Soyuz vehicle as the active docking vehicle Motion Control System shall control docking contact conditions within the limits specified in Table VIII–A.

AGREED.

3.7.6.5.9.3.7 Soyuz vehicle rendezvous abort command acceptance.

The Soyuz vehicle shall accept rendezvous abort commands from the Russian ground segment.

AGREED.

3.7.6.5.9.3.8 Launch.

The Soyuz vehicle shall be launched aboard the Soyuz launch vehicle.

AGREED.

3.7.6.5.9.3.9 Operational altitude.

The Soyuz vehicle shall have a maximum altitude limit of 230 nmi (425 km) for rendezvous and docking, and 248 nmi (460 km) for deorbit.

AGREED.

3.7.6.5.9.4 Activation and separation.

3.7.6.5.9.4.1 Reserved.

3.7.6.5.9.4.2 Activation independent of ISS and the ground.

The Soyuz vehicle shall be capable of being activated by the crew with no assistance from the Station or the ground when attached.

AGREED.

3.7.6.5.9.4.3 Reserved.

3.7.6.5.9.4.4 Independent separation capability.

The Soyuz vehicle shall be capable of being separated by the RS crew or Russian ground segment.

AGREED.

3.7.6.5.9.4.5 Soyuz vehicle initiated separation.

The Soyuz vehicle separation shall be capable of being initiated from within the Soyuz vehicle.

AGREED.

3.7.6.5.9.4.6 Disconnection of utilities.

Soyuz vehicle/RS interfaces shall be capable of being disconnected prior to or at separation without damage to the Soyuz vehicle or to the Station.

AGREED.

3.7.6.5.9.4.7 Reserved.

3.7.6.5.9.4.8 Reserved.

3.7.6.5.9.4.9 Separation clearance range.

The nominal Soyuz vehicle separation procedures shall assure that the external vehicle is outside a range of 0.27 nmi (0.5 km) to the ISS within 22 minutes after the time of separation and that the Soyuz vehicle shall not re–enter this separation range. (Excludes relocation of the Soyuz. Excludes fly–around time for tasks, e.g., photography, but time starts when task ends.)

AGREED.

3.7.6.5.9.4.10 Separation from a tumbling station.

The Soyuz vehicle shall allow thruster firings to be initiated 10 seconds after the separation event in order to support separation from a tumbling station.

AGREED.

3.7.6.5.9.5 Return mission.

3.7.6.5.9.5.1 Crew intervention.

The Soyuz vehicle design shall include controls and displays to allow the crew to initiate and intervene in the following automated sequences:

a. ISS separation

b. Attitude control prior to reentry burn.

c. Actual burn (stop or restart) and initiation of ballistic entry.

d. Orbital module separation.

e. Roll control after entry prior to chute deployment.

AGREED.

3.7.6.5.9.5.2 Autonomous Soyuz vehicle operation.

After separation, the Soyuz vehicle shall be capable of autonomous return mission operations using deorbit parameters provided from the ground.

AGREED.

3.7.6.5.9.5.3 Transmission of vehicle status after separation.

The Soyuz vehicle shall be capable of transmission of the vehicle status telemetry to the Russian ground segment from the time of separation of the flight vehicle from the Station until the time of separation of the Soyuz instrument module from the descent module when in view of the Russian ground stations.

AGREED.

3.7.6.5.9.5.4 Orbit inclination.

The Soyuz vehicle flight vehicle shall be capable of operating at an ISS orbit inclination of 51.6 degrees.

AGREED.

3.7.6.5.9.5.5 State vector compatibility.

The Soyuz vehicle shall have the independent capability to obtain the state vector and associated burn sequence information from the Russian ground segment when in view of Russian ground stations.

AGREED.

3.7.6.5.9.5.6 Recovery from missed deorbit opportunity.

The Soyuz vehicle shall be capable of recovery from one missed deorbit opportunity.

AGREED.

3.7.6.5.9.5.7 Entry accelerations, nominal mode.

The Soyuz vehicle shall limit entry accelerations on crew members to 5.5 g's (3–sigma) for nominal entry.

AGREED.

3.7.6.5.9.5.8 Landing cross range.

For a guided entry, the Soyuz vehicle is capable of a discrete cross range of 65 km (35.1 nautical miles) on either side of the orbital ground track.

AGREED.

3.7.6.5.9.5.9 Landing accuracy at the ground.

For a guided entry, the Soyuz vehicle is capable of landing with a radial accuracy of 30 km (16.2 nautical miles) three–sigma from the intended landing point.

AGREED.

3.7.6.5.9.5.10 Landing.

The Soyuz vehicle shall be primarily a land lander with water landing only as a backup contingency.

AGREED.

3.7.6.5.9.5.11 Automated operations.

After separation, the Soyuz vehicle shall be capable of automated return missions except for the following crew actions:

a. Voice communication.
b. Parachute jettisoning after landing.
c. Hatch operations.
d. Housekeeping functions.

AGREED.

3.7.6.5.9.5.12 Landing opportunities.

The Soyuz vehicle shall be capable of day or night landing opportunities.

AGREED.

3.7.6.5.9.5.13 Landing accelerations.

Landing accelerations are determined by the current Soyuz vehicle design.

AGREED.

3.7.6.5.9.5.14 Reserved.

3.7.6.5.9.5.15 Support from isolation to landing.

The Soyuz vehicle shall be designed to sustain a crew of 3 for a period of at least 24 hours from isolation to landing.

AGREED.

3.7.6.5.9.5.16 Reserved.

3.7.6.5.9.5.17 Ground support to flight operations.

Ground support shall be provided to Soyuz vehicle flight operations planning, mission design, and analysis, including: providing state vector information and landing site recommendation, calculating and verifying deorbit targets, and providing real–time consultation for a Soyuz vehicle return mission.

AGREED.

3.7.6.5.9.6 Reserved.

3.7.6.5.9.6.1 Reserved.

3.7.6.5.9.6.2 Crew transport time from Soyuz vehicle separation.

The Soyuz vehicle design shall enable the transport of crew members to the Earth's surface within 4 hours from the time of Soyuz vehicle separation from ISS for nominal return.

AGREED.

3.7.6.5.9.6.3 Reserved.

3.7.6.5.9.6.4 Communications with mission support.

The Soyuz vehicle design shall be capable of two–way voice communications with Russian ground segment personnel from the time after separation from the Station to the time of separation of the descent module, when in view of the Russian ground stations.

AGREED.

3.7.6.5.9.6.5 Reserved.

3.7.6.5.9.6.6 Entry accelerations.

The Soyuz vehicle shall limit entry accelerations on crew members to 12 g's (3–sigma) for ballistic entry return from orbit.

AGREED.

3.7.6.5.9.7 Reserved.

3.7.6.5.9.7.1 Attached communications with mission support.

The Soyuz vehicle shall provide independent two–way voice communications capability with the Russian ground segment while attached to the Station, when the Soyuz vehicle communications system is activated and when in view of Russian ground stations.

AGREED.

3.7.6.5.9.7.2 Attached Soyuz vehicle – Soyuz vehicle communications.

The Soyuz vehicle shall provide the capability for individual Soyuz vehicles to accomplish RF two–way simplex voice communications with each other, independent of the ISS, while they are attached.

AGREED.

3.7.6.5.9.7.3 Detached Soyuz vehicle to Soyuz vehicle communication.

The Soyuz vehicle shall provide the capability for individual Soyuz vehicles to accomplish RF two–way simplex voice communications with each other within the current Soyuz communications limitations, independent of the ISS, after they have separated.

AGREED.

3.7.6.5.9.7.4 Attached Soyuz vehicle/RS voice communications.

The Soyuz vehicle shall provide the capability for two–way voice communications with RS while attached.

AGREED.

3.7.6.5.9.7.5 Separation time limit.

The Soyuz vehicle shall be capable of separating from the Station with a crew of three within five minutes following hatch closure of the Soyuz vehicle.

AGREED.

3.7.6.5.9.8 Crew recovery, vehicle recovery, and post–recovery operations.

3.7.6.5.9.8.1 Reserved.

3.7.6.5.9.8.2 Post landing support.

The Soyuz descent module shall be designed to sustain a crew of three for a period of one hour post landing.

AGREED.

3.7.6.5.9.8.3 Vehicle location aid.

The Soyuz descent module shall provide a radio signal to aid in locating the landed Soyuz.

AGREED.

3.7.6.5.9.8.4 Reserved.

3.7.6.5.9.8.5 Reserved.

3.7.6.5.9.8.6 Reserved.

3.7.6.5.9.8.7 Crew rescue procedures.

The crew rescue operations procedures shall be provided for the Soyuz descent module.

AGREED.

3.7.6.5.9.8.8 Vehicle recovery procedures.

Vehicle recovery operations procedures shall be provided for the Soyuz descent module.

AGREED.

3.7.6.5.10 Training.

3.7.6.5.10.1 Reserved.

3.7.6.5.10.2 Procedures training.

Crew training for procedures which require crew access and/or physical interfaces shall be provided.

AGREED.

3.7.6.5.10.3 Functional systems training.

Crew training based on crew responsibility shall be provided for all functional systems which require crew monitoring or interaction.

AGREED.

3.7.6.5.11 Light Soyuz Vehicle.

3.7.6.5.11.1 Control internal lighting.

The Soyuz vehicle shall provide lighting control for each compartment and translation path.

AGREED.

3.7.6.5.11.2 Illuminate internal areas.

The Soyuz vehicle shall illuminate crew living areas and the interior crew workstation.

AGREED.

3.7.6.5.12 Service life.

The Soyuz vehicle shall have a service life of 200 days including 5 days of autonomous flight.

AGREED.

3.7.6.5.12.1 Seal life.

Nonmetallic seal materials shall be selected to operate within the design parameters for the on–orbit life of the Soyuz vehicle. Performance life shall include storage time and environment before use.

AGREED.

3.7.7 Cargo Vehicle.

3.7.7.1 Purpose.

The purpose of the CV is to provide the logistics resupply and reboost capability to the Station.

AGREED.

3.7.7.2 Description.

The Cargo Vehicle is an unmanned Progress family vehicle used for logistics resupply. The Cargo Vehicle will deliver dry cargo as well as propellant, atmospheric gases, and water to the Station. Propellant resupply also includes propellant transfer to the SM and through the SM to the FGB for propellant storage. When the CV is attached to the Station, it provides the propulsive means for reboost.

AGREED.

3.7.7.3 Capabilities.

3.7.7.3.1 Control total pressure.

3.7.7.3.1.1 Monitor total pressure.

The Cargo Vehicle shall provide measurement of the atmosphere total pressure over the range of 0.02 to 19.4 psia (1 to 1000 mm Hg) with an accuracy of +/– 0.58 psia (30 mm Hg).

AGREED.

3.7.7.3.1.2 Control nitrogen introduction.

The Cargo Vehicle shall manually introduce atmospheric gasses (nitrogen, oxygen, or air) into the on–orbit RS to maintain the atmosphere.

AGREED.

3.7.7.3.2 Light Cargo Vehicle.

3.7.7.3.2.1 Control internal lighting.

The Cargo vehicle shall provide lighting control for the cargo compartment.

AGREED.

3.7.7.3.2.2 Illuminate internal areas.

The Cargo vehicle shall illuminate the cargo compartment interior.

AGREED.

3.7.7.3.3 Relieve over pressure.

The Cargo Vehicle shall maintain the maximum internal–to–external differential pressure to less than the maximum design pressure of the Cargo Vehicle during autonomous flight.

AGREED.

3.7.7.3.4 Equalize pressure.

The RS and the Cargo Vehicle shall jointly provide a means to equalize pressure between the Cargo Vehicle and the Station when attached.

AGREED.

3.7.7.3.5 Safety.

3.7.7.3.5.1 Internal volume touch temperature.

3.7.7.3.5.1.1 Internal volume high temperature.

Surfaces which are subject to contact with crewmember bare skin shall be below 104 degrees Fahrenheit (40 degrees Centigrade).

AGREED.

3.7.7.3.5.1.2 Internal low volume temperature.

Surfaces which are subject to contact with crewmember bare skin shall be above 41 degrees Fahrenheit (5 degrees Centigrade).

AGREED.

3.7.7.3.5.2 Safe.

The Cargo Vehicle shall automatically safe out of tolerance conditions or functional performance that may manifest a catastrophic or critical hazard. The Cargo Vehicle shall automatically notify ground operators with results of automatic safing processes.

The Cargo Vehicle shall provide the capability for termination (automatic or RGS commanded) of thruster firings and propellant transfer operations upon detection of failure conditions.

AGREED.

3.7.7.3.5.3 Computer control of hazardous functions.

Computer control of hazardous functions with specific hardware and software safety implementation requirements shall be in accordance with the requirements of SSP 50094, section 9.9.1.

AGREED.

3.7.7.3.5.4 Hatch opening.

The Cargo Vehicle shall provide total pressure and temperature inside the cargo module to the Russian Ground Segment prior to hatch opening when attached to the RS.

AGREED.

3.7.7.3.6 Video transmission.

The Cargo Vehicle shall provide for transmission of video to the RS (when within communications range) and Russian Ground Segment (when within view) during the cargo vehicle approach and docking.

AGREED.

3.7.7.3.7 Determine state vector and attitude.

From activation of any CV:

The CV shall provide attitude rate data to the RGS (when in view of the RGS) with accuracy of 0.1 degree per second per axis at a 1 Hz rate.

AGREED.

3.7.7.3.8 Support uplinked data.

3.7.7.3.8.1 Receive uplinked data.

The Cargo vehicle shall receive the data stream (commands and navigation) uplinked from the RS ground.

AGREED.

3.7.7.3.9 Provide data for downlink.

3.7.7.3.9.1 Prepare data for downlink.

The Cargo Vehicle shall acquire digital and analog data (to include into the telemetry data) for the downlink from sources within the Cargo Vehicle.

AGREED.

3.7.7.3.9.2 Transmit data for downlink.

The Cargo Vehicle shall transmit digital data streams to the RS ground segment via the telemetry system.

AGREED.

3.7.7.3.10 Execute maneuver guidance.

a. The Cargo Vehicle shall be capable of controlling the on–orbit Space Station orbit by executing open loop maneuver sequences provided by the RGS.

b. The Cargo Vehicle shall be capable of controlling the on–orbit Space Station orbit by

executing open loop maneuver sequences provided by the RGS or SM when a crew installed matching unit provides connection between the CV and the SM.

AGREED.

3.7.7.3.11 Execute translation thrust.

(1) Reserved.

(2) The Cargo Vehicle shall have the capability to terminate a maneuver execution on command originating from RGS or SM within 1.0 second of receipt of the command, excluding the time of thrust tail off.

(3) The Cargo Vehicle shall control translation maneuver initiation and termination times to within 1.0 second of the targeted values, excluding the time of thrust build up or tail off or loss of communications.

(4) The Cargo Vehicle shall incrementally supply propellant to the SM and through the SM to the FGB.

(5) The Cargo Vehicle shall have the capability to determine total propellant consumption in the Cargo Vehicle tanks and report it to the RGS.

(6) The Cargo Vehicle shall have the capability to execute translational maneuver commands originating from the RGS or SM.

(7) The Cargo Vehicle shall respond to thruster on/off commands from the SM to the small CV thrusters, when a crew–installed matching unit provides connection between the CV and the SM.

(8) The Cargo Vehicle shall be designed to send propulsive effector and sensor data to the RGS.

(9) The Cargo Vehicle propulsion system shall have performance as shown in Table VI–A and VI–B.

(10) The Cargo Vehicle shall be designed to send propulsive effector data (status of thruster operations – on/off) to the SM, when a crew–installed matching unit provides connection between the CV and the SM.

(11) The CV shall be capable of executing translational maneuvers utilizing propellants fed directly from the FGB or SM propellant tanks.

(12) The Cargo Vehicle shall be capable of executing a translational maneuver of up to 5 feet per second (1.5 meters per second) within ninety minutes of being commanded to execute the maneuver, within the functional responsibilities for the Cargo Vehicle as shown in Figures 4–B, 4–C, and 4–D.

AGREED.

3.7.7.3.12 Control attitude – propulsive.

a. From activation of any Cargo Vehicle:

(1) The CV shall respond to thruster on/off commands from the SM when a crew installed matching unit provides connection between the CV small thrusters and the SM terminal computer.

b. When performing translation with main engine:

(1) The Cargo Vehicle shall control steady state attitude rates to within +/– 0.20 degrees per second in two axes when performing translational maneuvers, without SM support.

(2) The Cargo Vehicle shall control transient attitude rates to within +/– 0.5 degrees per second in two axes when performing translation maneuvers without SM support.

(3) The attitude rate transient in two axes during translation maneuvers shall not exceed the steady state value for more than 30 seconds without SM support.

(4) The Cargo Vehicle shall have the capability to control to inertial attitude about 2 axis during translation maneuvers without SM support.

(5) The Cargo Vehicle shall monitor convergence of the actual attitude relative to the commanded attitude and provide notification to the RGS of failure to converge, and automatically resolve the problem.

c. When performing translational maneuvers with CV small thrusters:

The attitude control for this mode of reboost shall be provided by the SM.

AGREED.

3.7.7.3.13 Transport cargo.

The Cargo Vehicle shall transport to the on–orbit Space Station water and atmospheric gases within the range defined in Table VII. The Cargo Vehicle shall transport crew supplies and logistics to support 3 permanent crew persons within the limits defined in Table VII. The Cargo Vehicle shall transport to the on–orbit Space Station the propellant identified in Table VII required to maintain the nominal operational altitudes and attitude control.

AGREED.

3.7.7.3.14 Maintain thermal conditioning.

The Cargo Vehicle shall maintain thermal conditioning of the CV internal systems while attached. A combination of passive and active thermal control (which may include air, electric heaters, and a fluid loop) will be used.

AGREED.

3.7.7.3.14.1 Thermal control system fluid standards.

The Progress vehicle fluid standards shall be in accordance with SSP 50094, paragraph 4.2.3.

3.7.7.3.15 Propellant transfer.

(1) The CV shall have the capability to leak check the propellant transfer interface between the CV and SM or UDM using pressurant gas from the propellant transfer system in response to commands originating from the RGS.

(2) The CV shall have the capability to purge propellant from the propellant transfer interface between the CV and SM or UDM before separation using pressurant gas from the propellant transfer system on the CV and external vacuum purge vents located on the SM or UDM.

AGREED.

3.7.7.3.16 Trash disposal.

The Cargo Vehicle shall provide capability for disposal of trash.

AGREED.

3.7.7.3.17 Capability: support prelaunch operations.

3.7.7.3.17.1 Load/unload cargo items.

The CV shall be capable of being processed such that a CV can be launched in no more than 45 days after the scheduled launch of a previous CV for contingency situations.

AGREED.

3.7.7.3.17.2 Support system checkout and monitoring.

The CV shall support checkout of all active systems and interfaces prior to each launch.

AGREED.

3.7.7.3.18 Cargo vehicle docking indication.

The cargo vehicle shall provide an indication of the docking status to the Russian Ground Segment during docking operations.

AGREED.

3.7.7.3.19 Independent separation capability.

The cargo vehicle shall be capable of being separated by the RS crew or the Russian Ground Segment.

AGREED.

3.7.7.3.20 Disconnection of utilities.

The cargo vehicle and RS interfaces shall be capable of being disconnected prior to or at separation without damage to the cargo vehicle or to the Station.

AGREED.

3.7.7.3.21 Separation clearance range.

The nominal cargo vehicle separation procedures shall assure that the external vehicle is outside a range of 0.27 nmi (0.5 km) to the ISS within 22 minutes after the time of separation and that the cargo vehicle shall not re–enter this separation range.

AGREED.

3.7.7.3.22 Capability: Provide automated collision avoidance maneuvers.

The Cargo Vehicle shall provide automatic collision avoidance maneuver capability, to prevent inadvertent collision with the ISS when within 1 km of the ISS, in the event of termination of proximity operations or docking by the onboard software or RGS. ISS crew shall have the capability to provide manual collision avoidance.

AGREED.

3.7.7.3.23 Capability: Mission planning – rendezvous and docking.

The on–orbit software and RGS mission planning shall produce Cargo Vehicle rendezvous and docking reference profiles that as a minimum provide the following safety features:

a. The Cargo vehicle final rendezvous trajectories to ISS altitude shall target a point out –of–plane such that if no further maneuvers were conducted, the approaching vehicle would pass safely by the ISS based on 3 sigma trajectory dispersions.

b. Rendezvous and proximity operations trajectory shall remain outside of a 400 m ”keep out zone” until start of the fly–around phase. (Excludes fly–around for relocation of vehicles).

AGREED.

3.7.7.3.24 Service Life.

The Cargo vehicle shall have a service life of 180 days including autonomous flight.

AGREED.

3.7.7.3.24.1 Seal Life.

Nonmetallic seal materials shall be selected to operate within the design parameters for the on–orbit life of the Cargo vehicle. Performance life shall include storage time and environment before use.

AGREED.

3.7.7.3.25 Operational altitude.

The Cargo vehicle hardware/software shall have the capability to operate at a maximum altitude limit of 248 nmi (460 km).

AGREED.

3.7.7.3.26 Docking mechanism and contact conditions.

Cargo vehicle as the active docking vehicle Motion Control System shall control docking contact conditions within the limits specified in Table VIII– A.

AGREED.

3.7.7.3.27 Support external vehicle to ISS relative navigation.

The Cargo Vehicle shall accommodate cooperative measurement systems to perform rendezvous with the ISS.

AGREED.

3.7.8 Reserved.

3.7.9 Reserved.

3.7.10 PDGF Stand Interface Assembly.

3.7.10.1 Purpose.

TBD

3.7.10.2 Description.

TBD

3.7.10.3.1 PDG Stand Interface Assembly.

3.7.10.3.1.1 PDG Stand Interface Installation.

TBD

3.7.10.3.1.2 Accommodate Mobile Servicing System.

The PDGF stand shall accommodate a Power Data Grapple Fixture worksite and robotic berthing point to provide the attachment point for the Space Station Remote Manipulator System (SSRMS). The PDGF stand shall provide the following interfaces to the PDGF as specified in SSP 50227, section C:

a. EVA and SSRMS access envelopes in accordance with SSP 50227, section C3.2.1.1.1.

b. PDGF stand location in accordance with SSP 50227, section C3.2.1.2.

c. Structural/Mechanical interfaces in accordance with SSP 50227, section C3.2.1.3.

d. Electrical interfaces in accordance with SSP 50227, section C3.2.1.4.

e. Data interfaces in accordance with SSP 50227, section C3.2.1.5.

f. Thermal interfaces in accordance with SSP 50227, section C3.2.1.6.

g. Environmental interfaces in accordance with SSP 50227, section C3.2.1.7.

h. EVA interfaces in accordance with SSP 50227, section 3.2.1.8.

AGREED.

3.7.10.3.1.2.1 PDGF Stand Load/Stiffness Limits.

While the PDGF stand is mounted on the RS, the PDGF stand and the RS hull structure shall together meet the loads and stiffness limits as specified in SSP 50227, section C3.2.1.3. Specific loads that the PDGF stand imparts to the FGB shall be in accordance with Russian requirements.

AGREED.

3.7.10.3.1.3 PDGF Mounting Ring Assembly.

The PDGF stand shall have a standard PDGF Mounting Ring installed on it in accordance with SSP 50227, paragraph C3.2.1.3.2 and oriented in accordance with SSP 50227, paragraph C3.2.1.2.1.

AGREED.

3.7.10.3.1.4 Video Signal Converter (VSC) Accommodation.

The FGB hull shall accommodate a video signal converter in accordance with SSP 50227 to provide for the following:

a. Assembly envelopes in accordance with SSP 50227, section D3.2.1.1.

b. Structural / Mechanical interfaces in accordance with SSP 50227, section D3.2.1.2.

c. Thermal interfaces in accordance with SSP 50227, section D3.2.1.4.

d. Environmental interfaces in accordance with SSP 50227, section D3.2.1.5.

e. EVA interfaces in accordance with SSP 50227, section D3.2.1.6.

AGREED.

3.7.10.3.2 PDGF Video, power, data distribution.

3.7.10.3.2.1 PDGF Video.

The RS shall provide for the accommodation of the US provided FGB PDGF video cable.

AGREED.

3.7.10.3.2.2 PDGF Power.

The RS shall provide power to the PDGF in accordance with SSP 50227, section C3.2.1.4.

AGREED.

3.7.10.3.2.3 MIL–STD–1553 Data.

The RS shall provide for distribution of MIL–STD–1553 data from the USL element, in accordance with RS spec paragraphs 3.2.2.7 and 3.3.17.

AGREED.

3.7.10.3.3 SSRMS on FGB PDGF Operations.

The RS shall be capable of having the SSRMS utilized on the Russian Segment to support SSP installation, SPP Solar Array installation, and other related activities for at least 10 complete cycles. A cycle is defined as the time from which the SSRMS has walked on and is mounted to the FGB PDGF, through completion of the SSRMS activity, to the time at which the SSRMS has walked off the FGB PDGF back to the US segment.

AGREED.

3.8. Precedence.

All specifications, standards, exhibits, drawings or other documents that are referenced in this specification are hereby incorporated as cited.

AGREED.

4.0 Verification.

This section contains the verification requirements for the Russian Segment.

Verification requirements are specified in sections 4.2 and 4.3. These requirements will verify the design conforms to the entire expected range of activities and environments.

AGREED.

4.1 General.

Tests (qualification and acceptance) performed during verification will conform to the requirements specified in SSP 50094, section 8.0. During environmental testing, flight–equivalent hardware will normally be used to avoid subjecting the actual flight hardware to extreme environments or wear. If flight hardware is used for environmental testing, it shall be in accordance with SSP 50094, section 8.0. Typically, acceptance functional testing of flight hardware will be performed at nominal operational levels. If an engineering development test (on development hardware) is intended to be used to verify flight hardware, the intent to do this must be pre–declared.

Simulators used for verification purposes require validation so that the hardware being verified can not distinguish between the simulator and the actual operational hardware/software.

AGREED.

4.2 Verification Process.

4.2.1 Methods.

Russian Segment verification will be conducted by one or more of several methods. Methods can be chosen based upon standard Russian practices. These methods may include: Ground (development and qualification) tests; In–flight testing; Engineering Analysis; Modeling (with a low fidelity mockup); verification on the basis of previous test results or standard use, including previous flight test results; Certification for use from previous applications (technical applicability and legal permission from the manufacturer); In–plant quality control; Acceptance Testing (testing upon delivery from manufacturer or subcontractor); and Integrated Test Facility and Launch Site testing. The above terms are intended to be used as a basis for RSA to describe verification methods utilizing standard Russian terminology.

In order to help RSA to better understand the scope and content of the US term ”verification”, a short description of American verification methods is described below.

Alternatively, Russian Segment verification may chose to utilize US verification methods. These are defined as follows:

Test – this is a method whereby requirements are verified by measurement during or after the controlled application of functional and environmental stimuli. Pass or fail criteria or acceptance tolerance bands will be specified prior to conduction the test. This method ensures that the actual performance of tested equipment or systems meets or exceeds specifications.

Demonstration – this is a method used for determination of properties of an end item or component by observation of its operation or characteristics. It is used with or without special equipment or instrumentation to verify characteristics such as:

Operational performance
Human engineering features
Maintainability
Accessibility
Transportability
Built in Test/Built in Test equipment
Display data

Interface verification by demonstration will use flight hardware and software, simulators, mockups, or interface tooling.

Inspection – this is a method of verifying physical characteristics that determines compliance of the item with requirements and may use standard methods such as visuals, gauges, etc. Hardware may be inspected as follows:

Construction
Workmanship
Physical condition
Specification and/or drawing compliance

Pretest and post test inspections will be performed for all tests. Inspection may be used to confirm that ground/flight software complies with applicable coding standards.

Analysis – this is a method of verification used when flight or actual operation conditions can not be simulated adequately on the ground. It is used when it is not cost effective to test. It is also used when necessary to confirm software compliance with coding standards. The Analysis verification method can be used during the following:

Engineering analysis
Mathematical modeling
Computer simulations
Similarity assessments
Analytical assessments
Utilizes proven analytical techniques and tools

Analysis can be used to determine closure of verification activities at lower levels of assembly.

AGREED.

4.2.2 Responsibility for verification.

Unless otherwise specified, RSA is responsible for the performance of all verification activities specified within this document. Russian verification reporting requirements are specified in the RSA/NASA Bilateral Integration and Verification Plan.

AGREED.

4.3.2 Characteristics.

4.3.2.1 Performance characteristics.

4.3.2.1.1 State – Perform mission.

Verification requirements not applicable.

4.3.2.1.1.1 Mode – standard.

Verification requirements not applicable.

4.3.2.1.1.1.1 Control atmospheric pressure.

4.3.2.1.1.1.1.1 Control total pressure.

The capability of the RS to control total pressure shall be verified by analysis. An integrated analysis shall be performed using qualification data from the RS modules to verify that the RS will control total pressure and nitrogen partial pressure of the modules within specified limits. The integrated analysis shall address the effects of temperature on total pressure control, the availability of necessary gas supply, power and data resources, as well as station atmosphere leakage. An analysis of qualification test data shall verify the capability of the RS to monitor the atmosphere total pressure over the range of 0.02 to 19.4 psia (1 to 1000 mm Hg) with an accuracy of +/– 0.58 psia (30 mm Hg). An analysis of qualification test data shall verify the capability of the RS to provide a manual measurement of the total pressure over a range of 0 to 18.5 psia (0 to 960 mm Hg) with an accuracy of +/– 0.04 psia (2 mm Hg).

The requirement verification is considered successful when the analysis proves that the RS will: (1) monitor the atmosphere total pressure over the range of 0 to 18.5 psia (0 to 960 mm Hg) visually and 0.02 to 19.4 psia (1 to 1000 mm Hg) automatically; (2) control the atmospheric pressure between 14.2 to 14.9 psia (734 to 770 mm Hg) nominally with a minimum pressure of 13.5 psia (700 mm Hg); and (3) maintain the atmosphere nitrogen total pressure below 11.6 psia (600 mm Hg).

AGREED.

4.3.2.1.1.1.1.2 Control oxygen partial pressure.

The capability of the RS to control oxygen partial pressure shall be verified by analysis. An integrated analysis shall be performed using qualification data from the RS modules to verify that the RS will control oxygen partial pressure to specified limits for six crew members. The integrated analysis shall address the effects of intermodule ventilation, the availability of necessary gas supply, power and data resources, station atmosphere leakage and metabolic usage effects. Additionally, an analysis of qualification test data shall verify the capability of the RS to monitor oxygen partial pressure within specified limits. The requirement verification is considered successful when the analysis and inspection proves that the RS will: (1) monitor the atmosphere oxygen partial pressure over a range of 0 to 5.8 psia (0 to 300 mm Hg) with an accuracy of +/– 0.23 psia (12 mm Hg) for the range of 0 to 3.9 psia (0 to 200 mm Hg) and an accuracy of +/– 0.33 psia (17 mm Hg) for the range of 3.9 to 5.8 psia (200 to 300 mm Hg).; (2) control oxygen partial pressure in the ISS between 2.83 and 3.35 psia (146 to 178 mm Hg) with a maximum concentration of 24.8 % by volume; and (3) the RS introduces oxygen into the atmosphere to support the metabolic needs of 1.89 lb per person per day (0.86 kg per person per day) for 6 crewmembers.

AGREED.

4.3.2.1.1.1.1.3 Relieve overpressure.

The capability of the RS to relieve overpressure shall be verified by analysis. An analysis shall be performed using qualification data from the RS modules to verify that the RS will control the maximum internal–to–external differential of the RS to less than the maximum allowable design pressure of the RS during segment interconnected operations. The requirement verification is considered successful when the analysis proves that the RS will control the maximum internal–to–external differential pressure of the RS to less than the maximum allowable design pressure of the RS.

AGREED.

4.3.2.1.1.1.1.4 Equalize pressure.

The capability of the RS to equalize pressure shall be verified by analysis. An analysis shall be performed using qualification data from the RS modules to verify that the RS will equalize pressure to the specified limits. The integrated analysis shall determine the maximum time to equalize pressure. The requirement verification is considered successful when the analysis proves that the RS will equalize the pressure differential between adjacent isolated volumes up to 1766 cubic feet (50 cubic meters) at 15.0 psia (775 mm Hg) and 14.3 psia (740 mm Hg) to less than 0.01 psid (0.5 mm Hg) within 3 minutes.

AGREED.

4.3.2.1.1.1.2 Condition atmosphere.

4.3.2.1.1.1.2.1 Control atmosphere temperature.

The capability of the RS thermal control system to maintain the air temperature in the habitable volumes within the range of 64–82 degrees F (18–28 degrees C) shall be verified by analysis of design documentation, the results of an analytical model, and the results of testing individual components of the thermal control system in the RS modules. On the basis of the results of this analysis a final report shall be issued. Verification shall be considered successful if the thermal control systems in the RS modules are capable of maintaining the air temperature in the habitable volumes within the range of 64–82 degrees F (18–28 degrees C).

4.3.2.1.1.1.2.2 Control atmosphere moisture.

The capability to maintain the relative humidity in the RS modules within the range of 30 to 70 % and the dew point within the range of 40 to 60 degrees F (4.4 to 15.6 degrees C) shall be verified by analysis of the schematics of the intermodule ventilation, the results of the moisture level calculations in the RS modules and the results of testing the assemblies controlling atmospheric moisture removal. On the basis of the results of the analysis a final report shall be issued. Verification is considered successful if the Russian Segment can maintain the relative humidity in the RS modules within the range of 30 to 70 % and the dew point within the range of 40 to 60 degrees F (4.4 to 15.6 degrees C).

AGREED.

4.3.2.1.1.1.2.3 Circulate atmosphere.

a. The capability to circulate the atmosphere in the habitable volumes of the RS modules within the range of 10 to 40 feet per minute (0.05 to 0.20 meter per second) shall be verified by analysis of the ventilation schematics of the RS modules and the results of the ventilation testing

of the habitable volumes of the RS flight articles or similar modules. On the basis of the results of this analysis, a final report shall be issued. Verification shall be considered successful if the circulation of the atmosphere in the habitable volumes of the RS modules are shown to be maintained within the range of 10 to 40 feet per second (0.05 to 0.20 meter per second).

b. The capability to circulate intermodule atmosphere shall be verified by analysis of the intermodule ventilation schematics of the RS modules, and the results of the ventilation testing of the components and equipment performing this function. On the basis of the results of this analysis a final report shall be issued. Verification shall be considered successful if the RS can circulate intermodule atmosphere in accordance with the joint interface requirements in SSP 42121 ICD, paragraph 3.2.2.3.1.

c. See paragraph b above.

AGREED.

4.3.2.1.1.1.3 Light station.

4.3.2.1.1.1.3.1 Control internal lighting.

The RS's capability to control internal lighting levels shall be verified by inspection and demonstration. Verification shall be considered successful when inspection of drawings and demonstrations show that the RS will control internal lighting levels and utilize light fixtures that have their own control.

AGREED.

4.3.2.1.1.1.3.2 Illuminate internal areas.

The RS's ability to illuminate crew living areas, passageways, and interior crew workstations in support of general tasks, conduct of experiments, emergency egress, and maintenance shall be verified by inspection or analysis or demonstration. The inspection or analysis shall be based on data from element assembly level drawings and lighting hardware drawings and specifications. The demonstration shall be based upon data collected from RS development hardware or from previous flight experience. The inspection or analysis or demonstration shall be considered successful when analysis of the data shows that the RS illuminates crew living areas, passageways, and interior crew workstations in support of general tasks, conduct of experiments, emergency egress, and maintenance to illumination levels as shown in Table I, measured by testing.

AGREED.

4.3.2.1.1.1.3.3 Accommodate on RS a source of light (navigation light) for Shuttle Star Tr

a. Verification shall be by test and analysis. Verification shall be considered successful when the test and analysis shows that the RS provides the interfaces to the navigation light as specified in protocol No. 9–035/97.

b. Verification shall be by inspection of drawings. Verification shall be considered successful when inspection of drawings shows that the navigation light is boresighted as specified herein.

c. Verification shall be by inspection of drawings. Verification shall be considered successful when it is shown that 60 degree field of view is provided with or without the presence of the Soyuz or Progress vehicles.

4.3.2.1.1.1.4 Respond to loss of function.

4.3.2.1.1.1.4.1 Isolate to recovery level.

Failure isolation and recovery, from loss of functions identified in Table II, shall be verified by analysis plus selected demonstrations on Russian equipment to check the software in accordance with the method for evaluating credible off–nominal situations. The list of analysis and demonstration data are identified below:

Content of examined failures:

(1) Module, system
(2) Failure name and category: nonhazardous (NH), hazardous (H), emergency (E), catastrophic (C)
(3) Influence of failure on station and module function, crew safety
(4) Failure determination criteria
(5) Counter–measures (automated, OCS, expeditions)
(6) Ground tests for optimizing counter–measures
(7) Comment

AGREED.

4.3.2.1.1.1.4.2 Recover lost function.

Failure isolation and recovery, from loss of functions identified in Table II, shall be verified by analysis plus selected demonstrations on Russian equipment to check the software in accordance with the method for evaluating credible off–nominal situations. The list of analysis and demonstration data is identified in 4.3.2.1.1.1.4.1.

AGREED.

4.3.2.1.1.1.4.3 Isolate for safing.

Failure isolation for safing as specified in 3.2.1.1.1.4.3, shall be verified by analysis in accordance with the method for evaluating credible off–nominal situations. The list of analysis data is identified in 4.3.2.1.1.1.4.1.

AGREED.

4.3.2.1.1.1.4.4 Safe.

Failure isolation or safing of identified hazardous conditions as specified in 3.2.1.1.1.4.4, shall be verified by analysis in accordance with the method for evaluating credible off–nominal situations. The list of analysis data is identified in 4.3.2.1.1.1.4.1.

AGREED.

4.3.2.1.1.1.5 Control station modes.

4.3.2.1.1.1.5.1 Maintain station mode.

a. The RS ability to maintain station mode as specified in 3.2.1.1.1.5.1, shall be verified by demonstration in accordance with the onboard system control mode tables. The list of demonstration data is identified below:

List of module modes:

(1) Mode title (Name)
(2) Objectives and systems that perform the tasks
(3) Mode performance constraints (structural, ballistics, data, lifetime, biological)
(4) Mode initialization (onboard computer complex, upon mission task, Ground Control, crew)
(5) Specific off–nominal situations for the mode in question
(6) Test stage
(7) Comment

b. From the activation of the FGB until the activation of the SM:

The FGB shall activate its attitude control system following receipt of the Orbiter departure indication from the USOS. Verification of this requirement shall be by test. Verification shall be considered successful when the FGB reactivates its attitude control system after receiving an Orbiter departure indication from the USOS.

c. Automatic moding of the ACS shall be verified by analysis. The verification shall be considered successful when the analysis that the RS ACS is moded to active attitude control within 5.0 seconds (after activation of the SM) or 2.5 seconds (prior to activation of the SM) of receipt of an Orbiter departure indication from the USOS in accordance with SSP 50097.

d. Automatic moding of the ACS shall be verified by analysis. The verification shall be considered successful when the analysis shows that the following conditions have been met:

(1). The RS ACS is moded to free drift within 5.0 seconds of receipt of an Orbiter capture indication from the USOS in accordance with SSP 50097.

(2). The RS ACS control mode indication is provided to the USOS in accordance with SSP 50097 within 2.1 seconds of mode change.

e. The capability of the RS to perform automatic power reduction (load shedding) shall be verified by analysis. An analysis shall be performed using qualification data to verify that the RS will detect a low voltage condition and issue power reduction requests to the USOS as specified.

f. The capability of the RS to perform automatic power reduction (load shedding) shall be verified by analysis. An analysis shall be performed using qualification data to verify that the RS will detect a low voltage condition and issue power reduction requests to the USOS as specified.

g. The ability of the RS to accept automatic power reduction (load shedding) commands from the USOS shall be verified by test. Verification shall be considered successful when the RS reduces consumption of USOS–provided power after receiving a command to load shed from the USOS as specified.

AGREED.

4.3.2.1.1.1.5.2 Transition station modes.

The RS ability to transition station modes as specified in 3.2.1.1.1.5.2, shall be verified by demonstration in accordance with the onboard system control mode tables. The list of demonstration data is identified 4.3.2.1.1.1.5.1.

AGREED.

4.3.2.1.1.1.5.3 Capability: Support execute attitude control handover operations.

a. From activation of the USOS Stage 5A GN&C and C&C flight software:

1) The RS shall have the capability to accept manual transfer of attitude control authority from the USOS. Verification of this requirement shall be done by test. The test shall be performed utilizing US and Russian flight software and hardware models. The verification shall be considered successful in the case of a conditional (handshake) transfer of control authority if test results show that: (1)IfUSGN&C mode is either Wait, standby, User Data Generation, or Drift, the RS promptly begins active attitude control, (2) If US GN&C mode is either CMG Only or Thruster Assist, the RS commands US GN&C to Drift, and begins active attitude control after US GN&C modes to Drift, (3) If US GN&C is unable to mode to Drift, the RS reports this to US C&C and remains in the current mode, and (4) If the RS cannot communicate with US GN&C, the RS issues a 'No Comm' advisory to the US C&C and, after a settable period of time, begins active attitude control. The verification shall be considered successful in the case of an unconditional transfer of attitude control if test results show that the RS promptly begins without conditions active attitude control upon command from US C&C.

2) RS shall have the capability to support manual transfer of attitude control authority to the USOS. Verification of this requirement shall be done by test. The test shall be performed utilizing US and Russian flight software and hardware models. The verification shall be considered successful in the case of a conditional (with handshake) AC handover if test results show that (1) the RS properly responds to a US C&C command to prepare for CMG Thruster Assist and sets the readiness indicator upon completion of the preparations, (2) the RS properly responds to US GN&C handshake commands.

AGREED.

4.3.2.1.1.1.6 Support crew control interface.

4.3.2.1.1.1.6.1 Provide data to crew.

The RS ability to provide data to the crew as specified in 3.2.1.1.1.6.1, shall be verified by demonstration in accordance with the crew data provision table. The list of demonstration data is identified below:

Control interface for crew with respect to information:

(1) System, PP
(2) Designation of required information
(3) Allocation of information for crew
(4) Source of information (OCS, VKU, database)
(5) Presentation format (annunciators, computer, voice communications, etc.) and type of information (static, dynamic)
(6) Presence of information in TM channel
(7) Test stage
(8) Comment

The capability for the RS to report Class 1, 2, and 3 C&W events to the USOS within 2.85 seconds from confirmation of the detected event shall be verified by analysis. This analysis will be considered successful when lower level verification of the RS End Items indicates that the total time required to report Class 1, 2, and 3 C&W events to the USOS does not exceed 2.85 seconds from confirmation of the detected event.

The capability for the RS to provide visual and aural annunciation of Class 1, 2, and 3 C&W events to the crew within 1.85 seconds from receipt of C&W event visual and aural annunciation notification from the USOS shall be verified by analysis. This analysis will be considered successful when lower level verification of the RS End Items indicates that the total time required to provide visual and aural annunciation of Class 1, 2, and 3 C&W events does not exceed 1.85 seconds from receipt of C&W event visual and aural annunciation notification from the USOS.

AGREED.

4.3.2.1.1.1.6.2 Accept crew inputs and commands.

The RS ability to accept crew inputs and commands as specified in 3.2.1.1.1.6.2, shall be verified by demonstration in accordance with the crew data provision table. The list of demonstration data is identified in 4.3.2.1.1.1.6.1 and below:

Control interface for crew with respect to control action output:

(1) System, PP
(2) Designation of control action (CA)
(3) Station and module modes that permit CA output, limitation on action output
(4) Source of information for deciding on CA output
(5) Result of action
(6) Necessity for automatic OCS verification for impermissibility
(7) Presence of information about action in the TM channel
(8) Test stage
(9) Comment

AGREED.

4.3.2.1.1.1.6.3 Capability: Provide Crew Control Interface.

The RS ability to provide the capability for crew interactive control of on–orbit ISS critical systems, caution and warning messages, and integrated plan functions using a portable U.S. laptop computer by providing two computer receptacles located in the SM and the FGB shall be verified by demonstration of electrical signal characteristics between the receptacle and the USOS interface.

AGREED.

4.3.2.1.1.1.7 Monitor system status.

4.3.2.1.1.1.7.1 Acquire function status data.

The RS ability to acquire function status data as specified in 3.2.1.1.1.7.1, shall be verified by analysis in accordance with the onboard systems status verification tables. The list of analysis data is identified below:

System status verification:

(1) System
(2) Designation of information
(3) Type of information (analog, digital)
(4) Required verification period

(5) Intended application and user
(6) Category of importance for control, decisions in ONS
(7) Presence in TM channel
(8) Test stage
(9) Comment

AGREED.

4.3.2.1.1.1.7.2 Assess function status data.

The RS ability to assess function status data as specified in 3.2.1.1.1.7.2 shall be verified by analysis in accordance with the onboard systems status verification tables. The list of analysis data is identified in 4.3.2.1.1.1.7.1.

AGREED.

4.3.2.1.1.1.8 Respond to emergency conditions.

4.3.2.1.1.1.8.1 Respond to fire.

The capability of the RS to respond to fire shall be verified by analysis. An integrated analysis shall be performed using qualification data from the RS modules to verify that the RS can respond to fire in accordance with the specified requirements. The integrated analysis shall address the rationale for location of fire detection hardware in accordance with the requirements in Figure 4 and the adequacy of portable fire extinguishers in accordance with the requirements in Figure 4. The verification is considered successful when the integrated analysis proves that the RS:

a. Isolate a fire event within 30 seconds of detection, including removal of power and forced airflow at the affected location, in accordance with the selection criteria in Figure 4;

b. Provide Portable Breathing Apparatuses and Portable Fire Extinguishers;

c. Activate a Class 1 Fire Alarm for a detected fire event;

d. Provide visual indication of a fire event;

e. Prevent forced air circulation between modules within 30 seconds of annunciation of a Class 1 Fire Alarm.

f. Show why portable fire extinguishers are adequate in accordance with the requirements in Figure 4;

g. Provide a fire suppressant that will eliminate a fire within one minute;

h. Detect a fire event in locations in accordance with the selection requirements in Figure 4; and

i. Have the capability to restore the habitable environment after a fire event.

AGREED.

4.3.2.1.1.1.8.2 Respond to rapid decompression.

a. The capability of the RS to detect a decompression shall be verified by analysis. An integrated analysis shall be performed using qualification data from the RS modules to verify that the RS will detect a rapid decompression per the specified requirements. The requirement verification is considered successful when the integrated analysis proves that the RS can detect a rapid decompression of 1.0 psi per hour (52 mm Hg per hour).

The capability of the RS to activate a Class I alarm for a RS detected decompression or based on notification of a decompression event from the USOS shall be verified by analysis. An integrated analysis shall be performed using qualification data from the RS modules to verify that the RS will activate a Class I alarm when the RS has detected a rapid decompression or based on notification of a decompression event from the USOS. The verification shall be considered successful when the integrated analysis proves that the RS can activate a Class I alarm for a RS detected decompression or based on notification of a decompression event from the USOS in accordance with SSP 50097, paragraph 3.4.1.1.1.

b. The RS capability to isolate the RS during a depressurization event shall be verified by analysis. An analysis shall be performed to determine that within 60 seconds of annunciation of a Class 1 depressurization alarm:

1. The RS can prevent forced air circulation in and between modules;

2. That the RS can stop oxygen introduction from the water electrolysis unit;

3. That the RS can close all external vents; and

4. That the RS can activate the RS depressurization airflow sensor assemblies.

The verification shall be considered successful when the analysis shows that within 60 seconds of annunciation of a Class 1 depressurization alarm:

1. The RS can prevent forced air circulation in and between modules;

2. That the RS can stop oxygen introduction from the water eledctrolysis units;

3. That the RS can close all external vents; and

4. That the RS can activate the RS depressurization airflow sensor assemblies.

AGREED.

4.3.2.1.1.1.8.3 Respond to hazardous atmosphere.

The RS's ability to provide a 15 minute supply or portable emergency breathing capability per crewmember shall be verified by analysis. The analysis shall be based upon data collected by reviewing PBA hardware specifications. The analysis shall be considered successful when the analysis shows that the RS is able to provide a 15 minute supply or portable emergency breathing capability per crewmember.

AGREED.

4.3.2.1.1.1.9 Provide electrical power.

4.3.2.1.1.1.9.1 Generate power.

A power system analysis shall be performed to verify power generation capability, power provided to the USOS, and power usage for housekeeping and sustaining operations for the RS (or FGB). All analyses shall be based on nominal conditions for all hardware and software (for example; no failures or required maintenance actions).

The orbital conditions to be considered and are defined as:

a. Flight orientation as defined in Table XII–A

b. Altitude is 407 km.

c. Orbital inclination is 51.6 degrees.

d. Solar flux constant is 1371 Watts per square meter.

e. Earth infrared radiation is 241 Watts per square meter.

f. Albedo is 0.27.

g. Solar beta angles to be analyze are:

1. 0 degrees: 56.8 minute sun period, 36.1 minute eclipse period.

2. 28 degrees: 58.2 minute sun period, 34.7 minute eclipse period.

3. 75 degrees: 92.9 minute sun period, 0 minute eclipse period.

Power generation shall be analyzed over a one orbit period. Power usage shall be analyzed over a twenty–four hour period.

The verification shall be considered successful if the analysis shows that the RS can generate power for housekeeping and sustaining operations and the power specified in Table IV for distribution to the USOS.

AGREED.

4.3.2.1.1.1.9.2 Distribute power.

An inspection of the flight article drawings shows the RS and USOS are rated to transfer the power specified in Table IV for each interface.

AGREED.

4.3.2.1.1.1.9.3 Store energy.

The requirement shall be verified when paragraph 3.2.1.1.1.9.1 is verified.

AGREED.

4.3.2.1.1.1.10 Maintain thermal conditioning.

The capability of RS's thermal systems to collect thermal energy from internal sources (3.2.1.1.1.10.1) then transmit (3.2.1.1.1.10.2) and dispose of it into the ambient environment (3.2.1.1.1.10.3) shall be verified by evaluation of the results of math modeling of the process of radiative heat exchange between external surfaces of the modules and components (truss, solar panels, etc.) of the ISS as a whole combined with evaluation of the heat exchange between thermal control systems of the modules and the RS centralized thermal control system of collecting and rejecting thermal energy in the ambient environment.

The evaluation shall be based on the analysis of design documentation of the ISS as a whole. The results of this evaluation will be documented in a final report. The verification analysis shall be considered successful when the thermal control system is shown to be capable of disposing of the collected thermal energy into the ambient environment while assuring that required temperatures of thermal control fluids are maintained.

AGREED.

4.3.2.1.1.1.10.1 Collect thermal energy (See 4.3.2.1.1.1.10).

4.3.2.1.1.1.10.2 Transmit thermal energy (See 4.3.2.1.1.1.10).

4.3.2.1.1.1.10.3 Dispose of thermal energy (See 4.3.2.1.1.1.10).

4.3.2.1.1.1.11 Maintain time reference.

4.3.2.1.1.1.11.1 Distribute time.

The RS ability to distribute time as specified in 3.2.1.1.1.11.1, shall be verified by analysis in accordance with the time distribution table. The list of analysis data is identified below:

Time Distribution:

(1) Module, system
(2) Permissible increments of time scale and level of accuracy
(3) Objective of using time scale
(4) Test stage
(5) Comment

AGREED.

4.3.2.1.1.1.12 Support flight crew.

The RS's ability to support the Flight Crew capability requirements for three ISS crew members shall be verified by inspection. The inspection shall be based upon data collected by reviewing element assembly level configuration drawings and resupply volume and rates for consumables to support the crew and/or upon data collected from flight experience. The inspection shall be considered successful when the analysis shows that RS supports the Flight Crew capability requirements for three ISS crew members.

AGREED.

4.3.2.1.1.1.12.1 Accommodate crew hygiene and wastes.

a. The RS's ability to provide facilities for personal hygiene and collection, processing, and disposal of crew metabolic waste shall be verified by inspection, analysis, or demonstration. The inspection or analysis shall be based upon data collected by reviewing element assembly level configuration drawings and component specifications. The demonstration shall be based upon data collected from flight experience. The inspection shall be considered successful when analysis of the data shows that the RS provides facilities for personal hygiene and collection, processing, and disposal of crew metabolic waste.

b. The RS's ability to accommodate collection, treatment, and disposal of menstrual discharge and associated absorbent material shall be verified by inspection or analysis or demonstration. The inspection or analysis shall be based upon data collected by reviewing end item hardware specifications and system waste processing capability. The demonstration shall be based upon data collected from flight experience. The inspection shall be considered successful when analysis of the data shows that the RS is able to accommodate collection, treatment, and disposal of menstrual discharge and associated absorbent material.

c. The RS's ability to accommodate the collection, containment, and disposal of emesis shall be verified by inspection or analysis or demonstration. The inspection or analysis shall be based upon data collected from system hardware drawings and specifications. The demonstration shall be based on data collected from past flight experience. The inspection or analysis or demonstration shall be considered successful when analysis of the data shows that the RS is able to accommodate the collection, containment, and disposal of emesis.

d. The RS's ability to accommodate internal disposal of external collected crew wastes shall be verified by inspection or analysis or demonstration. The inspection or analysis shall be based upon data collected from system hardware drawings and specifications. The demonstration shall be based on data from past flight experience. The inspection or analysis or demonstration shall be considered successful when analysis of the data shows that the RS is able to accommodate internal disposal of external collected crew wastes.

e. The RS's ability to support the crew member during post external cleanup shall be verified by inspection or analysis or demonstration. The inspection or analysis shall be based upon data collected during the review of system level drawings, specifications and supplies available. The demonstration shall be based on data from past flight experience. The inspection or analysis or demonstration shall be considered successful when analysis of the data shows that crew hygiene accommodations support the crew member during post external cleanup.

f. The RS's ability to accommodate the collection of crew fecal solids, liquids, gases, particulates, and the disposal of associated consumable materials shall be verified by inspection or analysis or demonstration. The inspection or analysis shall be based upon data collected from system hardware drawings and specifications. The demonstration shall be based upon data collected from past flight experience. The inspection or analysis or demonstration shall be considered successful when analysis of the data shows that the RS accommodates the collection of crew fecal solids, liquids, gases, particulates, and the disposal of associated consumable materials.

g. The RS ability to accommodate the collection of urine and associated consumable material shall be verified by inspection or analysis or demonstration. The inspection shall be based on data collected from hardware drawings. The analysis shall be based on review of system specification data. The demonstration shall be based upon data collected from flight experience. The inspection or analysis or demonstration shall be considered successful when data shows that the RS accommodates the collection of urine and associated consumable material.

h. The RS ability to accommodate personal grooming for crew skin care, shaving, hair grooming, and nail trimming shall be verified by inspection or demonstration. The inspection shall be based on data collected from hardware drawings and specifications. The demonstration shall be based upon data collected from flight experience. The inspection or demonstration shall be considered successful when data shows that the RS accommodates personal grooming for crew skin care, shaving, hair grooming, and nail trimming.

i. The RS ability to accommodate collection, processing, and disposal of crew hygiene wastes, including soap, expectorants, hair, nail trimmings, and hygiene water shall be verified by inspection or analysis or demonstration. The inspection shall be based on data collected from hardware drawings. The analysis shall be based on review of system specification data. The demonstration shall be based upon data collected from flight experience. The inspection or analysis or demonstration shall be considered successful when data shows that the RS accommodates collection, processing, and disposal of crew hygiene wastes, including soap, expectorants, hair, nail trimmings, and hygiene water.

j. The RS ability to accommodate whole body skin and hair cleansing shall be verified by inspection or analysis or demonstration. The inspection shall be based on data collected from hardware drawings. The analysis shall be based on review of system specification data. The demonstration shall be based upon data collected from flight experience. The inspection or analysis or demonstration shall be considered successful when data shows that the RS accommodates whole body skin and hair cleansing.

AGREED.

4.3.2.1.1.1.12.2 Support radiation exposure monitoring.

The ability to support monitoring of the crew's exposure to radiation in accordance with SSP 50065 (CHeCS to RS ICD) shall be verified by analysis. The analysis will utilize layout drawings and resource requirements per the ICD. The verification will be considered successful when it is determined that the proper equipment and resources are available as specified in the ICD to support monitoring of the crew's exposure to radiation.

AGREED.

4.3.2.1.1.1.12.3 Accommodate crew privacy.

a. TBD

b. The RS's ability to provide the crew members with a private and personal space capable of light and sound isolation in order to support crew rest, sleep and personal activities shall be verified by inspection. The inspection shall be based upon data collected by reviewing element assembly and system level layout and configuration drawings. The inspection shall be considered successful when analysis of the data shows that the RS is able to provide the crew members with a private and personal space capable of light and sound isolation in order to support crew rest, sleep and personal activities. The RS's ability to provide crew privacy for donning and doffing of clothing shall be verified by inspection. The inspection shall be based upon data collected by reviewing crew privacy accommodations hardware drawings and specifications. The inspection shall be considered successful when analysis of the data shows that the RS is able to provide crew privacy for donning and doffing of clothing.

c. TBD

d. TBD

e. TBD

f. TBD

g. TBD

h. TBD

i. TBD

j. TBD

k. TBD

l. TBD

AGREED.

4.3.2.1.1.1.12.4 Support crew personal items

The RS's ability to provide storage volume for crew equipment and consumables shall be verified by analysis. The analysis shall be based upon data collected by reviewing storage allocations, hardware drawings and specifications. The analysis shall be considered successful when review of the data shows that the RS provides storage volume for crew equipment and consumables.

AGREED.

4.3.2.1.1.1.12.5 Support housekeeping.

a. The RS's ability to support routine cleaning and trash collection and removal in pressurized compartments shall be verified by analysis. The analysis shall be based upon data collected from the review of system hardware designs and equipment and supplies available. The analysis shall be considered successful when analysis of the data shows that the RS is able to support routine cleaning and trash collection and removal in pressurized compartments.

b. The RS's ability to provide capture volumes for airborne particles that are accessible for replacement or cleaning without dispersion of the trapped materials shall be verified by analysis. The analysis shall be based upon data collected by reviewing component drawing and maintenance procedures. The analysis shall be considered successful when analysis of the data shows that the RS is able to provide capture volumes for airborne particles that are accessible for replacement or cleaning without dispersion of the trapped materials.

c. The RS's ability to provide facilities for collection and isolation of trash distributed throughout the pressurized volumes shall be verified by analysis. The analysis shall be based upon data collected by reviewing drawings, hardware quantities and distribution of on–orbit hardware. The analysis shall be considered successful when analysis of the data shows that the RS is able to provide facilities for collection and isolation of trash distributed throughout the pressurized volumes .

d. The RS's ability to isolate, contain, and store collected trash for ultimate disposal shall be verified by analysis. The analysis shall be based upon data collected by reviewing drawings, hardware quantities and distribution of on–orbit hardware. The analysis shall be considered successful when analysis of the data shows that the RS is able to isolate, contain, and store collected trash for ultimate disposal.

e. The RS ability to support microbial monitoring shall be verified by analysis. The verification will be considered successful when it is determined that the proper equipment and resources are available to support microbial monitoring.

AGREED.

4.3.2.1.1.1.12.6 Support crew health.

a. The translation path provision shall be verified by inspection of the Russian Segment top assembly drawings. Verification shall be considered successful if the inspection shows that the RS design includes an unobstructed translation path at least 610 mm (24 inches) in diameter.

b. The health care interfaces requirement shall be verified by analysis. The analysis shall be based on end item qualification test results, operation analysis, and inspection of element drawings. Verification shall be considered successful if the data shows compliance with the requirements of SSP 50065, CHeCS to RS ICD.

AGREED.

4.3.2.1.1.1.12.7 Support food and water consumption and cleanup.

a. The RS shall provide the capability for food consumption and cleanup as specified in SSP 50094, paragraph 6.3.3. The RS's ability to provide the capability for food consumption and cleanup as specified in SSP 50094, paragraph 6.3.3 shall be verified by inspection or analysis. The inspection or analysis shall be based upon data from drawings. The inspection or analysis shall be considered successful when analysis of the data shows that the RS shall provide the capability for food consumption and cleanup as specified in SSP 50094, paragraph 6.3.3.

b. The RS's ability to provide ambient potable water and heated potable water shall be verified by inspection. The inspection shall be based upon data collected during the operations of development hardware and acceptance of flight hardware. The inspection shall be considered successful when analysis of the data shows that the RS is able to provide ambient potable water and heated potable water.

AGREED.

4.3.2.1.1.1.12.8 Support food processing.

a. The RS's ability to provide refrigerated and ambient storage volume shall be verified by inspection. The inspection shall be based upon data collected by reviewing storage volume hardware capacity and allocations. The inspection shall be considered successful when analysis of the data shows that the RS provides refrigerated and ambient storage volume .

b. The RS's ability to provide food storage for a minimum of one week located in the area where food is processed and consumed shall be verified by inspection. The inspection shall be based upon data collected by reviewing element layouts and stowage allocations. The inspection shall be considered successful when analysis of the data shows that the RS is able to provide food storage for a minimum of one week located in the area where food is processed and consumed.

c. The RS's ability to provide the capability to rehydrate food shall be verified by inspection or analysis or demonstration. The inspection or analysis or demonstration shall be based upon data collected during the operation of development hardware and acceptance of flight hardware. The verification shall be considered successful when the analysis, inspection or demonstration shows that the RS is able to provide the capability to rehydrate food.

d. The RS's ability to heat food and liquids shall be verified by inspection or analysis or demonstration. The inspection or analysis or demonstration shall be based upon data collected during the operation of development hardware and acceptance of flight hardware. The verification shall be considered successful when the analysis, inspection or demonstration shows that the RS provides the capability to heat food and liquids.

e. The RS's ability to chill food and liquid shall be verified by inspection or analysis or demonstration. The inspection or analysis or demonstration shall be based upon data collected during the operation of development hardware and acceptance of flight hardware. The verification shall be considered successful when the analysis, inspection or demonstration shows that the RS provides the capability to chill food and liquid.

AGREED.

4.3.2.1.1.1.12.9 Provide food.

The Russian Segment's ability to provide food in accordance with the nutritional requirements in SSP 50094 shall be verified by analysis. The analysis will utilize nutritional data as specified in SSP 50094 in comparison with flight manifests and content list of Russian nutritional provisions. Verification will be considered successful when it is determined that the proper food is provided to ensure the nutritional requirements as specified in SSP 50094 are met.

AGREED.

4.3.2.1.1.1.12.10 Support internal crew restraint and mobility.

a. The RS's ability to support internal crew translation through pressurized volumes shall be verified by inspection. The inspection shall be based upon data collected by reviewing element assembly drawings and restraint and translation aids layout drawings. The inspection shall be considered successful when analysis of the data shows that the RS supports internal crew translation through pressurized volumes.

b. The RS's ability to incorporate handholds and handrails into the interior of the pressurized volumes to facilitate the crew's mobility and stability shall be verified by inspection. The inspection shall be based upon data collected by reviewing element assembly drawings and handhold and handrail layout drawings. The inspection shall be considered successful when analysis of the data shows that handholds and handrails are incorporated into the interior of the pressurized volumes to facilitate the crew's mobility and stability.

c. Restraints and mobility aids shall be designed in accordance with the following requirements:

(1). The RS's ability to provide fixed or portable inside vehicular activity mobility aids shall be provided as follows:

A. Around workstations, access hatches, doors, windows, and pressure hatches.

B. At designated terminal points and direction change points on established crew translation paths.

C. For inside EVA suited operations.

D. Located where the crewmember is protected from identified hazards.

E. Orientation and location to be consistent with the crew tasks they are supporting.

All shall be verified by inspection. The inspection shall be based upon data collected by reviewing element assembly drawings and restraint hardware layout drawings. The inspection shall be considered successful when analysis of the data shows that the RS is able to provide fixed or portable inside vehicular activity mobility aids located in the areas identified above.

(2). The RS's ability to provide inside vehicular activity crew restraints at the following locations:

A. At identified locations where crewmembers are expected to exert forces which cause the body to move in reaction.

B. At crew stations:

All shall be verified by inspection. The inspection shall be based upon data collected by reviewing element assembly drawings and restraint hardware layout drawings. The inspection shall be considered successful when analysis of the data shows that the RS is able to provide inside vehicular activity crew restraints located in the areas identified above.

(3). The RS's inside vehicular activity personnel restraints ability to comply with the following requirements:

A. Restraint design shall eliminate muscular tension.

B. The personnel restraint system shall be capable of on–orbit cleaning and repair.

C. All fixed and portable internal vehicle handholds and handrails shall be designed to an ultimate load of 445 N (100lbf) applied in any direction without failure or damage.

D. Items restrained with hook and loop fasteners shall be equipped with the hook type fastener and the restraining surface shall be equipped with the loop type fastener.

All shall be verified by inspection and/or demonstration. The inspection shall be based upon data collected by reviewing element assembly drawings and restraint hardware layout drawings. The demonstration shall be based upon data collected during simulated weightless environment testing and maintenance procedure review or upon data collected from flight experience. The inspection and/or demonstration shall be considered successful when analysis of the data shows that the RS's inside vehicular activity personnel restraints comply with the requirements stated above.

(4). The RS's inside vehicular activity fixed and portable foot restraints ability to meet the following requirements:

A. All foot restraints shall maintain foot position to allow the crewmember a complete range of motion (roll, pitch, and yaw).

B. Inside vehicular activity foot restraints and covers shall allow ventilation to the feet.

C. The foot restraint shall be capable of being removed for replacement/repair:

D. Foot restraints shall be designed to withstand a tension load of 445 N (100 lbf) as a minimum. Foot restraints shall withstand a torsion load of 100 Nm (75 lbf) as a minimum with the torsion vector parallel to the floor.

All shall be verified by inspection and/or demonstration. The inspection shall be based upon data collected by reviewing element assembly drawings and restraint hardware layout drawings. The demonstration shall be based upon data collected during simulated weightless environment testing and maintenance procedure review or upon data collected from flight experience. The inspection and/or demonstration shall be considered successful when analysis of the data shows that the RS's inside vehicular activity fixed and portable foot restraints comply with the requirements stated above.

(5). The RS's inside vehicle mobility paths' ability to meet the following requirements:

A. The minimum cross sectional dimensions of microgravity translation paths for 1 crewmember in light clothing shall be 65 cm.

B. A minimum interior cross section dimension of 80 cm shall be maintained to support translation.

C. Equipment exposed to the translation path shall be designed to withstand a design load of 556 N (125lbf) and a minimum ultimate load of 778 N (175 lbf).

D. Non–structural closures shall be capable of sustaining crew–imposed minimum design load of 556 N (125lbf) and a minimum ultimate load of 778 N (175lbf).

All shall be verified by inspection and/or demonstration. The inspection shall be based upon data collected by reviewing element assembly drawings and restraint hardware layout drawings. The demonstration shall be based upon data collected during simulated weightless environment testing and maintenance procedure review or upon data collected from flight experience. The inspection and/or demonstration shall be considered successful when analysis of the data shows that the RS's inside vehicular mobility paths comply with the requirements stated above.

AGREED.

4.3.2.1.1.1.13 Control internal carbon dioxide and contaminants

4.3.2.1.1.1.13.1 Control carbon dioxide.

The capability of the RS to control carbon dioxide shall be verified by analysis. An integrated analysis shall be performed using qualification data from the RS modules to verify that the RS will control carbon dioxide to specified limits. The integrated analysis shall address the effects of intermodule ventilation (as well as IMV short–circuiting) on carbon dioxide partial pressure levels. The requirement verification will be considered successful when the integrated analysis proves that the RS will: (1) control the carbon dioxide partial pressure in the atmosphere pressurized volumes to a maximum crew daily average of 0.10 psia (5.3 mm Hg); (2) control peaks levels to less than 0.147 psia (7.6 mm Hg); (3) remove 2.2 lb per person per day (1 kg per person per day) to support human metabolic needs for six crew members and (4) monitor atmospheric carbon dioxide levels over a range of 0 to 0.48 psia (0 to 25 mm Hg) with an accuracy of +/– 0.038 psia (2 mm Hg).

AGREED.

4.3.2.1.1.1.13.2 Control gaseous contaminants.

a. The RS habitable atmosphere shall be verified by analysis. An integrated analysis shall be conducted based upon RS modules qualification test data, on–ground outgassing tests, or atmosphere sample data taken during MIR–1 configuration. Verification is considered successful when the results of the analyses of the levels are at or below the values listed in Table V.

b. The RS air monitoring interfaces requirement shall be verified by analysis. The analysis shall be based on end item qualification test results, operation analysis, and inspection of element drawings. Verification shall be considered successful if the data shows compliance with the requirements as specified in SSP 50065, CHeCS to RS ICD.

AGREED.

4.3.2.1.1.1.13.3 Control airborne particulate contaminants.

The capability to remove airborne particulate contaminants in the habitable volumes of the RS to less than or equal to 0.15 milligrams per cubic meter for particles ranging from 0.5 microns to 300 microns in diameter shall be verified by analysis of the documentation of the particulate removal equipment in the RS and by analyzing the location of the particulate removal equipment in the ventilation system of the RS modules. On the basis of the results of this analysis a final report shall be issued. Verification shall be considered successful if the atmosphere particulate level in the RS can be maintained to less than or equal to 0.15 milligrams per cubic meter for particles ranging from 0.5 microns to 300 microns in diameter.

AGREED.

4.3.2.1.1.1.13.4 Control airborne microbial growth.

a. The capability of the RS to control airborne microbial growth shall be verified by analysis. An integrated analysis shall be performed using qualifications data from the RS modules to verify that the RS will limit the airborne microbial growth below the specified levels. The integrated analysis shall address the effects of intermodule ventilation on the control of airborne microbes. The requirement verification is considered successful when the integrated analysis proves that the RS will limit the daily average airborne microbes in the RS atmosphere to less than 1000 CFU per cubic meter.

b. The capability of the RS to support U.S. and Russian microbial monitoring equipment shall be verified by analysis. An integrated analysis shall be performed using layout drawings. The analysis shall be considered successful when the integrated analysis proves that airborne microbes can be monitored.

AGREED.

4.3.2.1.1.1.14 Provide water.

4.3.2.1.1.1.14.1 Provide water for crew use.

The capability of the RS to provide water for crew use and for water monitoring shall be verified by analysis. An integrated analysis shall be performed using qualification data from the RS modules to verify that the RS will provide water for crew use at the specified rates in accordance with water quality requirements. The integrated analysis shall address the RS water mass balance and water quality. Additionally, the analysis of the RS flight article drawings shall be performed to verify the capability to store and distribute water for crew use. The requirements verification is considered successful when the integrated analysis proves that the RS will:

(1) provide water for 6 crew members;

(2) provide an average of 5.5 lbm. per person per day (2.5 kg per person per day) of water, including an average of 1.1 lbm/person/day (0.5 kg/person/day) of the water in the food, for food rehydration, consumption, and oral hygiene;

(3) provide an average of 1.1 lbm. per person per day (.5 kg per person per day) of water for hygiene use;

(4) provide water of potable quality as in Table VI–A and provide water periodically for water monitoring and analysis.

AGREED.

4.3.2.1.1.1.15 Provide visual access.

4.3.2.1.1.1.15.1 Provide direct visual access.

The RS shall provide external direct visual access from station interior to station exterior to the crew for recreational and scientific purposes. The RS's ability to provide external direct visual access from station interior to station exterior to the crew for recreational and scientific purposes shall be verified by analysis. The analysis shall be based upon data collected by reviewing direct viewing window locations. The analysis shall be considered successful when the analysis shows that the RS can provide external direct visual access from station interior to station exterior to the crew for recreational and scientific purposes.

AGREED.

4.3.2.1.1.1.15.2 Provide remote internal visual access.

The remote video access of station pressurized volumes to RS crew, and RS Ground shall be verified by inspection. The verification shall be considered successful when an inspection of flight drawings and equipment shows that remote video access of station pressurized volumes to crew, and RS Ground is possible.

AGREED.

4.3.2.1.1.1.15.3 Reserved.

4.3.2.1.1.1.15.4 Capability: Accommodation of PDGF video cable.

Verification shall be by inspection of drawings. The verification shall be considered successful when the inspection shows that the FGB can accommodate the video cable.

4.3.2.1.1.1.16 Facilitate internal voice communication.

4.3.2.1.1.1.16.1 Transmit voice communications.

RS transmission of voice communications, loud annunciation, and caution and warning to the RS on–orbit element shall be verified by inspection. The verification shall be considered successful when the inspection of test results/reports and test flight drawings show that RS transmission of voice communications, loud annunciation and caution and warning to the RS on–orbit element is successful. The characteristics of the transmission of voice communication and loud annunciation (paging) for the USOS shall be verified by inspection. The verification shall be considered successful when the inspection of test results/reports and test flight drawings show that transmission of voice communication and loud annunciation (paging) for the USOS meet the requirements of SSP 42121, paragraphs, 3.2.1.5.1 and 3.2.2.5.1.

AGREED.

4.3.2.1.1.1.16.2 Receive voice communications.

RS reception of voice communications, loud annunciation, and caution and warning from the RS on–orbit element shall be verified by inspection. The verification shall be considered successful when the inspection of test results/reports and test flight drawings show that RS reception of voice communications, loud annunciation and caution and warning from the RS on–orbit element is successful. The characteristics of the reception of voice communication and loud annunciation (paging) from the USOS shall be verified by inspection. The verification shall be considered successful when the inspection of test results/reports and test flight drawings show that reception of voice communication and loud annunciation (paging) from the USOS meet the requirements of SSP 42121, paragraphs, 3.2.1.5.1 and 3.2.2.5.1.

AGREED.

4.3.2.1.1.1.17 Reserved.

4.3.2.1.1.1.18 Determine navigation parameters.

4.3.2.1.1.1.18.1 Determine state vector and attitude.

a. From activation of the SM:

The RS shall determine the on orbit Space Station position, velocity, attitude, and attitude rate knowledge to support attitude control, translation control, and pointing of RS systems. Verification of this requirement shall be done by demonstration. The demonstration shall be performed by the RSA using RS flight or equivalent computers and software. The verification shall be considered successful if the demonstration proves that the RS can determine the position, velocity, attitude, and attitude rate data.

b. From activation of the USOS MDMs in US lab:

(1) All commands and data transferred between the RS and USOS shall be in accordance with SSP 50097. Verification of this requirement shall be done by test. The test shall verify that commands and data transferred between the RS Central Computers and the USOs are in accordance with ICD, SSP 50097. The verification shall be considered successful if the test proves that the RS can accept and provide commands and data in accordance with ICD, SSP 50097. This test done in the USA.

(2) The RS shall provide the USOS with position, velocity, attitude, and attitude rate data at a rate of 1 Hz. Verification of this requirement shall be done by test. The test shall be performed using RS and US flight or equivalent computers and software. The verification shall be considered successful if the test proves that the RS can provide the USOS with position, velocity, attitude, and attitude rate data at a rate of 1 Hz. This test done in USA.

(3) The RS shall provide the USOS with position and velocity translational data with a position accuracy of at least 2953 feet (900 meters) (3 sigma root sum square error), and a semi–major accuracy of 984 feet (300 meters) (3 sigma). Verification of this requirement shall be done by analysis. Analysis shall be performed by the RSA, utilizing analytical tools, simulations and models of the ground and on–board hardware and software. The verification shall be considered successful if the analysis proves that the RS can provide the USOS with position data with an accuracy of 2953 feet (900 meters)(3 sigma root sum square error), and with a semi–major axis accuracy of 984 feet (300 meters)(3 sigma).

(4) Reserved.

(5) The RS shall provide the USOS with attitude of the Space Station Analysis Coordinate System with respect to the J2000 and LVLH reference frames, with an accuracy of 0.5 degree (3 Sigma for each of three axes). Verification of this requirement shall be done by analysis. Analysis shall be performed by the RSA, utilizing analytical tools, simulations and models of the ground and on–board hardware (including sensor errors, structural dynamics, mating alignment, and thermal deformation) and software. The verification shall be considered successful if the analysis proves that the RS can provide the USOS with attitude of the Space Station Analysis Coordinate System with respect to the J2000 and LVLH reference frame with an accuracy of 0.5 degree (3 sigma for each of the three axis).

(6) The RS shall provide the USOS with attitude rate of the ISS, in the Space Station Analysis Coordinate System reference frame, with an accuracy of 0.01 degrees per second (3 sigma for each of three axes). Verification of this requirement shall be done by analysis. Analysis shall be performed by the RSA, utilizing analytical tools, simulations and models of the ground and on–board hardware and software. The verification shall be considered successful if the analysis proves that the RS can provide the USOS with the inertial attitude rate of the ISS in the Space Station Analysis Coordinate System reference frame with an accuracy of 0.01 degree per sec (3 sigma for each of the three axis).

(7) The RS shall correct for the angular misalignment between the SM reference frame and the Space Station Analysis Coordinate System, which are as specified in SSP 50094, section 12. Verification of this requirement shall be done by test. The test shall be performed by the RSA using RS and US flight or equivalent computers and software. The verification shall be considered successful if the test proves that the RS can correct for the angular misalignment between the SM reference frame and the Space Station Analysis Coordinate System.

c. When the CV is performing translational maneuvers:

The CV shall provide attitude rate data to the RGS when the CV is in view of the RGS. Verification of this requirement shall be done by test. The test shall be performed by the RSA using RS on–board and ground hardware and software. The verification shall be considered successful if the data is available to the RGS.

AGREED.

4.3.2.1.1.1.18.2 Generate pointing and support data.

From activation of the USOS MDMs in US Lab:

The capability of the RS to provide the USOS the identifiers of payloads (or robotics subsystem components) and positions of their centers of mass (in accordance with SSP 50097) shall be verified by analysis and test. Integrated hardware (computer and data bus) and software tests will be performed to verify the data transfer to the USOS. The verification shall be considered successful when the integrated hardware and software tests shows the data transfer to the USOS is in accordance with SSP 50097.

AGREED.

4.3.2.1.1.1.19 Maintain attitude – nonpropulsive.

4.3.2.1.1.1.19.1 Capability: Maintain attitude – nonpropulsive.

a. From activation of the RS nonpropulsive effectors:

(1) The RS shall be able to maintain a TEA using only nonpropulsive effectors. Verification of this requirement shall be done by demonstration. The demonstration shall be performed by the RSA to ensure that the RS can maintain a TEA using only nonpropulsive effectors. The verification shall be considered successful if the demonstration proves that the RS can maintain a TEA using only nonpropulsive effectors.

(2) The RS shall be able to maintain LVLH and inertial attitudes using only nonpropulsive effectors. (This requirement does not size the nonpropulsive effectors and depends on available momentum storage). Verification of this requirement shall be done by demonstration. The demonstration shall be performed by the Russian Segment to ensure that the RS can maintain LVLH and inertial attitudes using only nonpropulsive effectors. The verification shall be considered successful if the demonstration proves that the RS can maintain LVLH and inertial attitudes using only nonpropulsive effectors.

(3) The RS shall monitor the nonpropulsive effector momentum state relative to saturation levels and provide notification to the RGS and crew of excessive momentum levels during nonpropulsive attitude control. Verification of this requirement shall be done by demonstration. The demonstration will verify that the RS will send notification of excessive momentum levels to the RGS and crew during nonpropulsive attitude control. The verification shall be considered successful if the RGS and crew receive notification of excessive momentum levels from the RS.

(4) The RS shall maintain attitude stability to 5.0 degrees per axis per orbit (total attitude variation in any single orbit interval of time) when controlling to TEA. Verification of this requirement shall be done by analysis. Analysis shall be performed by the RSA, utilizing analytical tools, simulations and models of the ground and on–board hardware (including sensor errors, structural dynamics, mating alignment, and thermal deformation) and software. Analytical tools which are capable of providing simulations of the quasi–steady dynamic environment (low frequencies such as gravity gradient, on–orbit induced rotation and aerodynamics), the structural dynamics (due to flexible vibration modes) sources of acceleration disturbances, and station time domain will be used for the analysis. The verification shall be considered successful when the data demonstrates that the RS can maintain attitude stability to 5.0 degrees per axis per orbit (total attitude variation in any single orbit interval of time) when controlling to TEA.

(5) The RS shall maintain attitude within +/– 3 degrees per axis in the SM reference frame of the commanded attitude when controlling to an LVLH or inertial attitude with nonpropulsive effectors. (Propulsive effectors will be used for desaturation). Verification of this requirement shall be done by analysis. Analysis shall be performed by the RSA, utilizing analytical tools, simulations and models of the ground and onboard hardware (including sensor errors, structural dynamics, mating alignment, and thermal deformation) and software. Analytical tools which are capable of providing simulations of the quasi–steady dynamic environment (low frequencies such as gravity gradient, on–orbit induced rotation and aerodynamics), the structural dynamics (due to flexible vibration modes) sources of acceleration disturbances, and station time domain will be used for the analysis. The verification shall be considered successful when the data demonstrates that the RS can maintain attitude within +/–3.0 degrees per axis including sensor errors, structural dynamics, and element misalignment of RS elements of the commanded LVLH or inertial attitude during nonpropulsive attitude control.

(6) The RS shall maintain the attitude rates to within +/– 0.015 degrees per second per axis with respect to the commanded reference frame when controlling with nonpropulsive effectors. Verification of this requirement shall be done by analysis. Analysis shall be performed by the RSA, utilizing analytical tools, simulations and models of the ground and on–board hardware and software. Analysis utilizing analytical tools which are capable of providing the quasi–steady

dynamic environment, the structural dynamics sources of acceleration disturbances, and station time domain and the integrated RS/ISS flex and rigid body analysis. The verification shall be considered successful when the analysis shows that the RS can control attitude rates to within +/–0.015 degrees per second per axis, with respect to the commanded attitude when controlling with nonpropulsive effectors.

(7) The RS shall execute attitude control commands originating from the RGS or crew when using nonpropulsive effectors. Verification of this requirement shall be done by demonstration. The demonstration shall be performed utilizing US and Russian flight software and hardware models. The verification shall be considered successful if the RS receives, validate and process the RGS or crew commands during attitude control with nonpropulsive effectors.

(8) The RS shall notify the RGS and crew of failure to converge to the commanded attitude. Verification of this requirement shall be done by test. The test will verify that the RS will send notification of failure to converge to the commanded attitude to the RGS and crew during nonpropulsive attitude control. The verification shall be considered successful if the RGS and crew receive notification of failure to converge to the commanded attitude from the RS.

(9) The RS shall have the capability to accept constant inertial, LVLH and Analysis Coordinate Frame angular momentum commands from the RGS or crew. The achieved angular momentum variation shall be less than 250 ft–lb–sec/axis peak–to–peak in any 10 orbit period relative to the command. The angular momentum variation accuracy shall be verified by analysis including thermal and bending flexure error sources. Integrated hardware and software tests shall be performed to verify the capability to accept the angular momentum command. The verification shall be considered in compliance when the accuracy is consistent with the requirement and the command availability has been demonstrated.

(10) The RS shall maintain Space Station attitude within +/– 15 degrees in yaw and roll, +15 to –20 degrees in pitch with respect to (0, 0, 0) yaw, pitch, and roll orientation in the LVLH reference frame to meet thermal constraints and power generation requirements. Verification of this requirement shall be done by analysis. Analytical tools which are capable of providing simulations of thequasi–steady dynamic environment (low frequencies such as gravity gradient, on–orbit induced rotation and aerodynamics), the structural dynamics (due to flexible vibration modes) sources of acceleration disturbances, and station time domain shall be used for the analysis. The verification shall be considered successful when the data demonstrates that the RS can maintain attitude within +/– 15 degrees in yaw and roll, +15 to –20 degrees in pitch with respect to (0, 0, 0) yaw, pitch, and roll orientation in the LVLH reference frame.

(11) When mated with the Orbiter, the RS shall maintain Space Station attitude within +/– 15 degrees in roll and yaw, + 25 to 0 degrees in pitch with respect to (0,0,0) yaw, pitch, and roll orientation in the LVLH reference frame. Verification of this requirement shall be done by analysis. Analytical tools which are capable of providing simulations of the quasi–steady dynamic environment (low frequencies such as gravity gradient, on–orbit induced rotation and aerodynamics), the structural dynamics (due to flexible vibration modes) sources of acceleration disturbances, and station time domain shall be used for the analysis. The verification shall be considered successful when the data demonstrates that when mated with the Orbiter, the RS can maintain a Space Station attitude within +/– 15 degrees in roll and yaw, + 25 to 0 degrees in pitch with respect to (0,0,0) yaw, pitch, and roll orientation in the LVLH reference frame.

b. From activation of the USOS MDMs in US lab:

(1) All commands and data transferred between the RS and USOS shall be in accordance with SSP 50097 ICD. Verification of this requirement shall be done by test. The test shall verify that

commands and data transferred between the RS Central Computers and the USOS (C&C MDM and GN&CP MDM) are in accordance with SSP 50097 ICD. The verification shall be considered successful if the test proves that the RS can accept and provide commands and data in accordance with SSP 50097 ICD. This test done in USA.

(2) The RS shall monitor the RS nonpropulsive effector momentum state relative to saturation levels and provide notification to the USOS of excessive momentum levels during nonpropulsive attitude control. Verification of this requirement shall be done by demonstration. The demonstration will verify that the RS will send notification of excessive momentum levels to the USOS during nonpropulsive attitude control. The verification shall be considered successful if the USOS receive notification of excessive momentum levels from the RS.

(3) The RS shall execute attitude maneuver abort commands, as specified in SSP 50097 ICD, originating from the USOS when using nonpropulsive effectors. Verification of this requirement shall be done by demonstration. The verification shall be considered successful if the RS receives, validates, and processes the USOS commands during attitude control with nonpropulsive effectors.

(4) The RS shall notify the USOS of failure to converge to the commanded attitude. Verification of this requirement shall be done by test. The test will verify that the RS will send notification of failure to converge to the commanded attitude to the USOS and USGS during nonpropulsive attitude control. The verification shall be considered successful if the USOS receive notification of failure to converge to the commanded attitude from the RS.

AGREED.

4.3.2.1.1.1.20 Support on–orbit to ground communication.

4.3.2.1.1.1.20.1 Support uplinked data.

a. An analysis shall be performed to verify that the RS receives the data stream (commands, voice, video, and navigation) uplinked from the RS ground. The verification shall be considered successful when an analysis shows that the uplink coverage, bit error rate and data conversions of the RS received data stream (commands, voice, video, and navigation) uplinked from the RS ground meet the data stream user requirements.

b. A demonstration shall be performed to verify that data streams can be relayed from the USGS to the RGS for uplink to the RS receivers and an analysis shall be performed to verify that the RS receives these data streams (commands, voice, video, and navigation) uplinked from the RS ground. The verification shall be considered successful when a demonstration has been accomplished that shows that the uplink data stream containing data in support of USGS command and control of on–orbit Russian elements and payloads during nominal operations, and backup command and control of ISS elements during contingency operations can be uplinked and that an analysis shows that the uplink coverage, bit error rate and data conversions of the RS received data stream (commands, voice, video, and navigation) uplinked from the RS ground meet the data stream user requirements.

c. The distribution of uplinked audio, video, and digital data within the RS and to the interfaces with other on–orbit Space Station segments shall be verified by inspection. The verification shall be considered successful when an inspection of flight drawings/hardware show that the distribution of uplinked audio, video, and digital data within the RS and to the interfaces with other on–orbit Space Station segments can be accomplished in accordance with SSP 42121, paragraphs, 3.2.1.5.1, 3.2.2.5.1, 3.2.1.5.3 and 3.2.2.5.3.

AGREED.

4.3.2.1.1.1.20.2 Provide data for downlink.

a. An inspection shall be performed to verify that the RS acquires audio, video and digital data (to include telemetry and navigation data) for down link from sources within the RS and from interfaces with other on–orbit the data stream (commands, voice, video, and navigation) uplinked from the RS ground. The verification shall be considered successful when an inspection of test/report data shows that the uplink coverage, bit error rate and data conversions of the RS received data stream (commands, voice, video, and navigation) uplinked from the RS ground meet the data stream user requirements in accordance with SSP 42121, paragraphs, 3.2.1.5.1, 3.2.2.5.1, 3.2.1.5.3 and 3.2.2.5.3.

b. A demonstration shall be performed to verify that data streams can be relayed from the USGS to the RGS for uplink to the RS receivers and an analysis shall be performed to verify that the RS receives these data streams (commands, voice, video, and navigation) uplinked from the RS ground. The verification shall be considered successful when a demonstration has been accomplished that shows that the uplink data stream containing data in support of USGS command and control of on–orbit Russian elements and payloads during nominal operations, and backup command and control of ISS elements during contingency operations can be uplinked and that an analysis shows that the uplink coverage, bit error rate and data conversions of the RS received data stream (commands, voice, video, and navigation) uplinked from the RS ground meet the data stream user requirements.

c. The distribution of uplinked audio, video, and digital data within the RS and to the interfaces with other on–orbit Space Station segments shall be verified by inspection. The verification shall be considered successful when an inspection of flight drawings/hardware show that the distribution of uplinked audio, video, and digital data within the RS and to the interfaces with other on–orbit Space Station segments can be accomplished.

AGREED.

4.3.2.1.1.1.21 Support internal equipment manipulation and maintenance.

4.3.2.1.1.1.21.1 Support internal equipment translation.

The RS's ability to provide handles or structural or mechanical parts suitable for gripping and tethering equipment that requires moving in accordance with SSP 50094, paragraph 6.4.2 shall be verified by inspection, or analysis, or demonstration. The inspection shall be based upon data collected by reviewing element assembly drawings and hardware drawings. The analysis shall be based upon clearance studies. The demonstration shall be based upon data collected from hardware testing and human factors demonstrations performed on RS development hardware or data supplied from flight experience where applicable. The inspection, or analysis, or demonstration shall be considered successful when it shows that the RS provides handles or structural or mechanical parts suitable for gripping and tethering equipment that requires moving in accordance with SSP 50094, paragraph 6.4.2.

AGREED.

4.3.2.1.1.1.21.2 Support internal equipment removal and replacement.

The RS's ability to provide crew and equipment restraints capable of being located throughout the RS pressurized habitable volume to support removal and replacement of ORUs and in situ maintenance shall be verified by inspection or analysis or demonstration. The inspection shall be based upon data collected by reviewing element assembly drawings and hardware layout drawings The analysis shall be based upon clearance studies. The demonstration shall be based

upon data collected during subsystem hardware testing and implementation of human factors test plans or data supplied from flight experience where applicable. The inspection or analysis or demonstration shall be considered successful when analysis or the data shows that the RS can provide crew and equipment restraints capable of being located throughout the RS pressurized habitable volume to support removal and replacement of ORUs and in situ maintenance.

AGREED.

4.3.2.1.1.1.21.3 Support internal equipment identification.

The RS's ability to provide inventory labels on portable equipment and ORUs to maintain an on–orbit inventory to support logistics/resupply operations shall be verified by inspection and/or demonstration. The inspection shall be based upon data collected by reviewing hardware drawings and equipment lists. The demonstration shall be based upon data collected during subsystem hardware testing and implementation of human factors test plans or data supplied from flight experience where applicable. The inspection and/or demonstration shall be considered successful when analysis of the data shows that the RS can provide inventory labels on portable equipment and ORUs to maintain an on–orbit inventory to support logistics/resupply operations.

AGREED.

4.3.2.1.1.1.21.4 Support internal equipment restraint.

The RS's ability to provide equipment restraints for every item that is not permanently attached to the RS structure shall be verified by inspection and/or demonstration. The inspection shall be based upon data collected by reviewing element assembly drawings and restraint hardware layout drawings. The demonstration shall be based upon data collected during subsystem hardware testing and implementation of human factors test plans or data supplied from flight experience where applicable. The inspection and/or demonstration shall be considered successful when analysis of the data shows that the RS can provide equipment restraints for every item that is not permanently attached to the RS structure.

AGREED.

4.3.2.1.1.1.21.5 Support orbital replaceable unit repair.

a. The RS's ability to support limited repair of selected ORUs by providing a work area and tools sufficient to mechanically disassemble, effect repair re–assemble and checkout shall be verified by inspection and/or demonstration. The inspection/demonstration shall be based upon data collected from subsystem assembly drawings and specifications and implementation of human factors test plans or data supplied from flight experience where applicable. The inspection/demonstration shall be considered successful when analysis of the data shows that the RS can support limited repair of selected ORUs by providing a work area and tools sufficient to mechanically disassemble, effect repair, re–assemble and checkout.

b. The RS's ability to provide isolation of failed ORUs by ground personnel and/or crew procedure shall be verified by inspection and/or demonstration. The inspection shall be based upon data collected from subsystem assembly drawings and specifications. The demonstration shall be based upon data collected during subsystem hardware testing and implementation of human factors test plans or data supplied from flight experience where applicable. The inspection and/or demonstration shall be considered successful when analysis of the data shows that the RS can provide isolation of failed ORUs by ground personnel and/or crew procedure.

AGREED.

4.3.2.1.1.1.21.6 Store internal equipment.

The RS's ability to provide storage volume to store spare internal ORUs, tools, diagnostic equipment, and maintenance supplies shall be verified by analysis. The analysis shall be based upon data provided through drawings and lists of hardware dimensions and stowage requirements. The analysis shall be considered successful when the analysis shows that the RS can provide storage volume to store spare internal ORUs, tools, diagnostic equipment, and maintenance supplies.

AGREED.

4.3.2.1.1.1.22 Support Station to external vehicle proximity operations communications.

4.3.2.1.1.1.22.1 Support external input data.

An inspection shall be performed to verify that the RS can receive audio from manned external vehicles, and video, and KURS radar data from all Russian external vehicles. The inspection shall verify the ability to process and distribute the separated audio and video. The verification shall be considered successful when a inspection of tests/reports shows that the RS can receive, audio from manned external vehicles, and video and KURS radar data from all Russian external vehicles and process and distribute the separated audio and video.

AGREED.

4.3.2.1.1.1.22.2 Provide data for external vehicles.

Verification of this requirement is defined in section 4.3.7.6, Soyuz Vehicle.

AGREED.

4.3.2.1.1.1.22.3 Support external vehicle wave–off.

Verification that the on orbit RS and RS ground can independently determine and communicate vehicle wave–off to approaching Russian vehicles within the direct communication range of the approaching vehicle when it is no longer safe to proceed with docking shall be accomplished by analysis. The analysis shall consider the procedures and timeline associated with utilizing the external vehicle monitoring capability to formulate the wave–off decision and, for example to switch off the station based KURS to implement a decision to abort. For manned external vehicles, the analysis shall also consider the use the direct voice link to confirm to the wave–off decision. The verification shall be considered successful if the analysis data shows that the wave–off decision can be communicated to the vehicle within the direct communication range of the approaching vehicle.

AGREED.

4.3.2.1.1.1.23 Reserved.

4.3.2.1.1.1.24 Capabilities during Pressure Change.

The RS ability to provide the capabilities specified in 3.2.1.1.1.24 during the time of depressurization, while depressed, and during repressurization of a RS element shall be verified as follows:

a. TBD

b. TBD

c. TBD

d. TBD

e. The capability of the RS to maintain the critical functions as specified in Section 3.2.1.1.1.24e, shall be verified by analysis of design documentation and the results of testing individual components of the systems in the RS modules. On the basis of this testing, a final report shall be issued. Verification shall be considered successful if the systems in the RS modules can maintain the critical functions as specified in sec. 3.2.1.1.1.24e.

AGREED.

4.3.2.1.1.2 Mode: reboost – habitable.

Verification requirements not applicable.

4.3.2.1.1.2.1 Execute translation maneuvers.

4.3.2.1.1.2.1.1 Execute maneuver guidance.

a. From activation of the FGB:

(1) The RS shall control the on–orbit Space Station invariant semi–major axis to within 2000 feet (610 meters)(3 sigma) of the targeted value at the end of the reboost maneuver. Verification of this requirement shall be done by analysis. Analysis shall be performed by the RSA, utilizing analytical tools, simulations and models of the ground and onboard hardware and software. The verification shall be considered successful when the analytic data shows that the RS can control the on–orbit Space Station invariant semimajor axis to within 2000 feet (610 meters)(3 sigma) of the targeted value at the end of the reboost maneuver.

(2) The RS shall be capable of controlling the on–orbit Space Station orbit by executing open loop maneuver sequences provided by the RGS. Verification of this requirement shall be done by demonstration. The demonstration shall be performed by the Russian Segment to ensure that the RS is capable of controlling the on–orbit Space Station orbit by executing open loop maneuver sequences provided by the RGS. The verification shall be considered successful if the demonstration proves that the RS is capable of controlling the on–orbit Space Station orbit by executing open loop maneuver sequences provided by the RGS.

(3) The FGB shall automatically dock with the SM. Verification of this requirement shall be done by demonstration. The demonstration shall be performed using RS hardware and software models as well as environmental models. The verification shall be considered successful when the FGB / SM docking can be accomplished.

b. From activation of the SM:

(1) The RS shall control the on–orbit Space Station invariant semimajor axis to within 1000 feet (3 sigma) of the targeted value at the end of the reboost maneuver. Verification of this requirement shall be done by analysis. Analysis shall be performed by the RSA, utilizing analytical tools, simulations and models of the ground and on–board hardware and software. The verification shall be considered successful when the analytic data shows that the RS can control the on–orbit Space Station invariant semimajor axis to within 1000 feet (3 sigma) of the targeted value at the end of the reboost maneuver.

(2) The RS shall be capable of executing single burn maneuvers commanded by the crew. Verification of this requirement shall be done by demonstration. Demonstration will be performed utilizing US and Russian flight software and hardware models. The verification shall be considered successful when demonstration show that RS is capable of executing single burn maneuvers commanded by the crew excluding the First Generation CV.

(3) The RS shall be capable of controlling the on–orbit Space Station orbit by executing open loop maneuver sequences provided by the crew. Verification of this requirement shall be done by demonstration. Demonstration will be performed utilizing US and Russian flight software and hardware models. The verification shall be considered successful if the RS receive the open loop maneuver sequences and commands from the crew and execute the sequences and commands.

c. From activation of the USOS MDMs in US lab:

(1) All commands and data transferred between the RS and USOS shall be in accordance with SSP 50097 ICD. Verification of this requirement shall be done by test. The test shall verify that commands and data transferred between the RS Central Computers and the USOS (C&C MDM and GN&CP MDM) are in accordance with SSP 50097 ICD. The verification shall be considered successful if the test proves that the RS can accept and provide commands and data in accordance with SSP 50097 ICD. This test done in USA.

(2) The RS shall be capable of controlling the on–orbit Space Station orbit by executing open loop maneuver sequences originating from the RGS and provided to the RS via the USGS and by the USOS. Verification of this requirement shall be done by demonstration. Demonstration will be performed utilizing U.S. and Russian flight software and hardware models. The verification shall be considered successful if the RS receives the open loop maneuver sequences and commands from the RS via the USGS and the USOS and executes the sequences and commands.

AGREED.

4.3.2.1.1.2.1.2 Execute translational thrust.

a. All Stages:

(1) The RS shall terminate a maneuver execution on command originating from the RGS within 1.0 second of receipt of the command. Verification of this requirement shall be done by test. The test will be performed utilizing US and Russian flight software and hardware models. The verification shall be considered successful if the RS receive the terminate maneuver commands from RGS and process the commands within the 1.0 second time constraint.

(2) The RS shall control translation maneuver initiation and termination times to within 1.0 second of the targeted values. Verification of this requirement shall be done by test. The test will be performed utilizing US and Russian flight software and hardware models. The verification shall be considered successful if the initiation and termination times meet the 1.0 second time constraint.

(3) The RS shall determine total propellant levels and report them to the RGS. Verification of this requirement shall be done by demonstration. The demonstration will be performed utilizing US and Russian flight software and hardware models. The verification shall be considered successful if the RGS receives proper data from the RS.

(4) The RS shall have the capability to execute translation maneuver commands originating from the RGS. Verification of this requirement shall be done by demonstration. The

demonstration will be performed during Stage verification utilizing US and Russian flight software and hardware models. The verification shall be considered successful if the RS receives the translation commands from the RGS and executes the maneuver.

(5) The RS shall be able to inhibit thrusters from firing when in contact with the Orbiter. Verification of this requirement shall be done by demonstration. The verification will show that the RS is able to discontinue attitude control when in contact with the Orbiter. Demonstration shall be performed utilizing RS and Russian hardware models. The verification shall be considered successful when the demonstration shows that the RS is able to discontinue attitude control when in contact with the Orbiter.

(6) The RS shall be designed to send propulsive effector data to the RGS. Verification of this requirement shall be done by demonstration. The demonstration will be performed during Stage verification with Russian flight and ground software and hardware models. The verification shall be considered successful if the RGS receives proper data from the RS.

(7) The RS propulsion system shall have the performance as shown in Table VI–A. The operational life of the components of the propulsion systems shall be verified during component ground tests. The functionality and integrity of the propulsion systems shall be verified during system level ground tests in accordance with the Test Plans.

b. From activation of the FGB until activation of the SM:

(1) The RS shall be capable of executing a maneuver of up to 5 ft per sec within 90 minutes after receiving the RGS command data stream (Flight Assignment). Verification of this requirement shall be done by test. The test will be performed utilizing U.S. and Russian flight and ground software and hardware models. The verification shall be considered successful if the RS receives maneuver commands from the RGS and completes the maneuver within the time constraint, and the RS receives maneuver commands from the RGS and executes the maneuver 24 hours later.

(2) The RS propulsive effectors shall have a service life sufficient to complete the reboosts and attitude control maneuvers until SM activation. Verification of this requirement shall be done by analysis. Analysis will be performed to verify requirement compliance, utilizing analytical tools. The verification shall be considered successful when the analysis shows that the RS has a service life sufficient to complete the reboosts and attitude control maneuvers until SM activation.

(3) After docking with the SM, the FGB engines shall not be used. Verification of this requirement shall be done by demonstration. The demonstration will be performed utilizing RS flight software and hardware models. The verification shall be considered successful if the FGB engines are unable to fire after SM activation.

c. When the SM is performing translational maneuvers:

(1) The RS shall be capable of executing a translational maneuver of up to 5 feet per second within ninety minutes of being commanded to execute the maneuver maneuver, within the functional responsibilities for the SM as shown in Figures 4–A, 4–B, 4–A15C, and 4–D. Verification of this requirement shall be done by test and/or analysis. The test and/or analyses will be performed utilizing RS flight software and hardware models to determine the time required to initiate a reboost sequence based on pre–stored data packets and complete the translation burn of up to 5 fps (1.5 m/s). Verification will be considered successful when the analysis and /or test data shows that the station can achieve a change in velocity of up to 5 feet per second within ninety minutes of being commanded to activate the systems and perform the SM tasks which are required to implement the translational maneuver, as shown in Figures 4–A, 4–B, 4–A15C, and 4–D.

(2) The RS shall terminate a maneuver execution on command originating from the RGS or crew within 1.0 second of receipt of the command. Verification of this requirement shall be done by test. Test will be performed during Stage verification utilizing U.S. and Russian flight software and hardware models. The verification shall be considered successful if the RS receive the terminate maneuver commands from the RGS or crew and process the commands within the 1.0 second time constraint.

(3) The RS shall provide propellant for orbital thrust increments to compensate for orbital decay due to atmospheric drag and a reserve to perform a reboost to an altitude that will allow 360 days orbital decay to an altitude of 150 nautical miles (278 km) under nominal conditions. Verification of this requirement shall be done by analysis utilizing analytical tools and subsystem simulations. The analysis will be performed to ensure that all applicable on–orbit Space Station configurations can provide propellant for orbital thrust increments to compensate for orbital decay during the operational lifetime. The analysis shall include propellant usage and distribution to determine adequate on–orbit propellant storage. Math models and configuration data shall be used for any decay analysis. The verification shall be considered successful when it is shown that all the applicable station configurations are properly sized for propellant storage.

(4) Reserved.

(5) The RS shall have the capability to determine propellant levels in the RS tanks and report them to the crew. Verification of this requirement shall be done by demonstration. Demonstration will be performed during Stage verification using Russian flight software and hardware models. The verification shall be considered successful if the crew receives proper data from the RS.

(6) The RS shall have the capability to control the ISS attitude during translational maneuvers. Verification of this requirement shall be done by demonstration. The demonstration will be performed during stage verification using Russian flight software and hardware models. The verification shall be considered successful if the attitude is maintained during translation maneuvers.

(7) The RS shall have the capability to execute translational maneuver commands originating from the crew. Verification of this requirement shall be done by demonstration. The demonstration will be performed during Stage verification utilizing US and Russian flight software and hardware models. The verification shall be considered successful if the RS receives the translation commands from the crew and executes the maneuver.

(8) The RS propulsive effectors shall have a design life sufficient to complete the reboosts and attitude control maneuvers required over the life of the RS. Verification of this requirement shall be done by analysis. Analysis will be performed to verify requirement compliance, utilizing analytical tools. The verification shall be considered successful when the analysis shows that the RS has a service life sufficient to complete the reboosts and attitude control maneuvers over the life of the RS.

(9) The RS shall send propulsive effector data to the crew. Verification of this requirement shall be done by demonstration. The demonstration will be performed during Stage verification with Russian flight and ground software and hardware models. The verification shall be considered successful if the crew receives proper data from the RS.

(10) The RS shall be able to enable or inhibit individual thrusters by direct command originating from the RGS or crew. Verification of this requirement shall be done by test. Test shall be performed utilizing US and Russian flight software and hardware models. The verification shall be considered successful if the firing or inhibit commands, sent from RGS or crew, are received and processed correctly by the RS and individual thrusters are either enabled or inhibited.

(11) The RS shall have the capability of performing translational maneuvers using CV thrusters fed directly with propellants from the SM or FGB propellant tanks. This requirement shall be verified by analysis, ground tests, or by analogous flight unit performance in orbit in accordance with the Test Plans.

d. From activation of the USOS MDMs in US lab:

(1) All commands and data transferred between the RS and USOS shall be in accordance with SSP 50097 ICD. Verification of this requirement shall be done by test. The test shall verify that commands and data transferred between the RS Central Computers and the USOS are in accordance with SSP 50097. The verification shall be considered successful if the test proves that the RS can accept and provide commands and data in accordance with SSP 50097 ICD. This test done in USA.

(2) The RS shall terminate a translational maneuver execution in response to an abort command originating from the USOS within 1.0 second of receipt of the command. Verification of this requirement shall be done by test. Demonstration will be performed utilizing US and Russian flight software and hardware models. The test shall be considered successful if the RS receive the terminate maneuver abort commands from USOS and process the commands within the 1.0 second time constraint.

(3) The RS shall determine total propellant levels and report them to the USOS for downlink to the USGS excluding the First Generation CV. Verification of this requirement shall be done by demonstration. Demonstration will be performed during Stage verification US and Russian flight software and hardware models. The verification shall be considered successful if the USOS receives proper data from the RS.

(4) The RS shall have the capability to execute translational maneuvers abort commands originating from the USOS. Verification of this requirement shall be done by demonstration. The demonstration will be performed during Stage verification utilizing US and Russian flight software and hardware models. The verification shall be considered successful if the RS receives the translation abort commands from the USOS and executes the maneuver.

(5) The RS shall send propulsive effector status data to the USOS. Verification of this requirement shall be done by demonstration. The demonstration will be performed during Stage verification with Russian and US flight software and hardware models. The verification shall be considered successful if the USOS receives proper data from the RS.

(6) The RS shall be able to enable or inhibit individual thrusters by direct command originating from the USOS. Verification of this requirement shall be done by test. Test shall be performed utilizing US and Russian flight software and hardware models. The verification shall be considered successful if the firing or inhibit commands, sent from the USOS, are received and processed correctly by the RS and individual thrusters are either fired or inhibited.

e. When the CV is performing translation maneuvers:

(1) Reserved.

(2) Reserved.

(3) Reserved.

(4) Reserved.

(5) Reserved.

(6) The RS shall be capable of executing a translational maneuver of up to 5 feet per second within ninety minutes of being commanded to execute the maneuver, within the functional responsibilities for the Cargo Vehicle as shown in Figures 4–B, 4–A15C, and 4–D, Verification of this requirement shall be done by test and/or analysis. The test and/or analyses will be performed utilizing RS flight and ground software and hardware models to determine the time required to initiate a reboost sequence based on pre–stored data packets and complete the translation burn of 5 fps (1.5 m/s). Verification will be considered successful when the analysis and/or test data shows that the station can achieve change in velocity of up to 5 feet per second within ninety minutes of being commanded to activate the systems and perform the Progress tasks which are required to implement the translational maneuver, as shown in Figures 4–B, 4–A15C, and 4–D.

(7) The RS shall have the capability of performing translation maneuvers using CV thrusters fed directly with propellants from the SM propellant tanks. This requirement shall be verified by analysis, ground tests, or by analogous flight unit performance in orbit in accordance with the Test Plans.

(8) When a crew installed matching unit provides connection between the CV small thrusters and the SM terminal computer:

(a) The CV shall respond to thruster on/off commands from the RS.

(b) The CV shall send propulsive effector data (status of thruster operations – on/off) to the RS.

This requirement shall be verified by ground tests. The tests will be considered successful when the CV thrusters respond correctly to commands from the SM TC and when the CV sends appropriate CV propulsive effector status data to the SM.

AGREED.

4.3.2.1.1.2.2 Control attitude – propulsive.

4.3.2.1.1.2.2.1 Rotational control.

a. All Stages:

(1) The RS shall have the capability to control to LVLH and inertial attitudes using propulsive effectors. Verification of this requirement shall be done by demonstration. Demonstration shall be performed during Stage verification utilizing US and Russian flight software and hardware models. The verification shall be considered successful if the RS status data shows that RS propulsive control changes the attitude to LVLH and inertial.

(2) Reserved.

(3) The RS shall execute attitude control commands originating from the RGS when using propulsive effectors. Verification of this requirement shall be done by demonstration. Demonstration shall be performed utilizing US and Russian flight software and hardware models. The verification shall be considered successful if the RS receives and processes the commands from the RGS.

(4) The RS shall provide attitude control capability during all phases of Orbiter and other external vehicles approach, and departure operations, and the capability to return to the desired attitude upon completion of Orbiter and other external vehicles mating or demating operations. Verification of this requirement shall be done by demonstration. The demonstration will show that the RS is capable of providing attitude control capability during all phases of Orbiter and other external vehicles approach , and the capability to return to the desired attitude upon completion of Orbiter mating or demating operations. The demonstration will utilize Russian computers, software and hardware models. The verification shall be considered successful when the demonstration shows that the RS can provide attitude control capability during all phases of Orbiter and other external vehicles approach, and departure operations, and the capability to return to the desired attitude upon completion of Orbiter and other external vehicles mating or demating operations.

(5) The RS shall be designed to send propulsive system data to the RGS. Verification of this requirement shall be done by demonstration. The demonstration will be performed during Stage verification with Russian flight and ground software and hardware models. The verification shall be considered successful if the RGS receives proper data from the RS.

(6) The RS Motion Control System's contribution to the peak to peak angular motion (dynamic error range) shall be within 4.0 degrees peak to peak per axis after a failed Orbiter docking and back away. Verification of this requirement will be done by analysis. The verification shall be considered successful when the data demonstrates that while the ISS is under the effects of Orbiter plume disturbances, the RS MCS's contribution to the peak–to–peak angular motion is within 4.0 degrees peak–to–peak per axis.

(7) The RS MCS shall maintain angular rate of the RS body axes relative to the true LVLH coordinates to within 0.1 degrees per second per axis after a failed Orbiter docking and back away. Verification of this requirement shall be done by analysis. The verification shall be considered successful when the data demonstrates that, while the ISS is under the effects of Orbiter plume disturbances, the RS MCS can maintain the angular rate of the RS body axes relative to the true LVLH coordinates to within 0.1 degrees per second per axis.

b. From activation of the FGB until activation of the SM:

(1) The RS shall provide dynamic stability to perform berthing with the Orbiter and other external vehicles at an altitude of 278 kilometers (150 nautical miles) or above. Verification of this requirement shall be done by analysis. The analysis shall ensure that the station shall be capable of providing sufficient dynamic stability to perform berthing with the Orbiter at an altitude of 278 kilometers (150 nautical miles) or above. Analytical tools and simulations of the integrated RS/USOS segment shall be used for the analysis. The verification shall be considered successful when the analysis data demonstrates that the RS can provide dynamic stability to perform berthing with the Orbiter and other external vehicles at altitudes specified in the requirement.

(2) The RS shall control attitude rates to within +/–1.50 degrees per second per axis when performing translation maneuvers. Verification of this requirement shall be done by analysis. The analysis shall ensure that the station shall be capable of controlling attitude rates to within +/– 1.50 degrees per second per axis when performing translational maneuvers. Analysis shall be performed utilizing analytical tools, simulations and models of the on–board hardware (including sensor errors, structural dynamics, mating alignment, and thermal deformation) and software. The verification shall be considered successful when the analysis data demonstrates that the RS can control the attitude rates to within +/– 1.50 degrees per second per axis.

(3) The RS shall send attitude control data and attitude determination data to the RGS. Verification of this requirement shall be done by demonstration. The verification shall be considered successful if the RGS receives proper data from the RS.

(4) The RS shall be able to discontinue attitude control after grappling with the Orbiter, independent of the USGS and RGS. Verification of this requirement shall be done by demonstration. The verification will show that the RS is able to discontinue attitude control after grappling with the Orbiter independent of USGS and RGS. Demonstration shall be performed utilize RS and Russian hardware models. The verification shall be considered successful when the demonstration shows that the RS is able to discontinue attitude control after grappling with the Orbiter independent of USGS and RGS.

(5) The RS shall maintain its attitude and attitude rate in the LVLH frame with an accuracy of +/– 1.5 degrees and a +/– 0.1 degrees per second angular rate. Verification of this requirement shall be done by analysis. The analysis shall ensure that the station shall be capable of stabilizing the attitude to within +/–1.5 degrees per axis per orbit and +/–0.1 degree per second rate. Analysis shall be performed by the RSA, utilizing analytical tools, simulations and models of the ground and on–board hardware and software. Analytical tools which are capable of providing integrated RS/ISS flex and rigid body analysis shall be used. The verification shall be considered successful when the data demonstrates that the attitude and attitude rates are held within tolerance of +/– 1.5 degrees per axis per orbit and an angular rate of +/– 0.1 degrees per second with respect to LVLH or inertial.

(6) The RS shall be able to maintain attitude and attitude rates of the Space Station to an accuracy of +/– 10 degrees per axis and +/– 0.10 degrees per second per axis to support grappling with the Orbiter SRMS. Verification of this requirement shall be done by analysis. Analytical tools which are capable of providing integrated RS/ISS flex and rigid body analysis shall be used. The verification shall be considered successful when the data demonstrates that the attitude and angular rates are within the limits specified.

(7) After docking with the SM, the FGB engines shall no be used. Verification of this requirement shall be done by demonstration. The demonstration will be performed utilizing RS flight software and hardware models. The verification shall be considered successful if the FGB engines are unable to fire after SM activation.

c. From activation of the SM:

(1) The RS shall provide dynamic stability to perform docking and undocking with the Orbiter and other external vehicles at an altitude of 278 kilometers (150 nautical miles) or above. Verification of this requirement shall be done by analysis. The analysis shall ensure that the station shall be capable of providing sufficient dynamic stability to perform docking and undocking with the Orbiter at an altitude of 278 kilometers (150 nautical miles) or above. Analytical tools and simulations of the integrated RS/USOS segment shall be used for the analysis. The verification shall be considered successful when the analysis data demonstrates that the RS can provide dynamic stability to perform docking and undocking with the Orbiter and other external vehicles at altitudes specified in the requirement.

(2) The RS shall control attitude rates to within +/– 0.20 degrees per second per axis when performing translational maneuvers. Verification of this requirement shall be done by analysis. The analysis shall ensure that the station shall be capable of controlling attitude rates to within +/– 0.20 degrees per second per axis when performing translational maneuvers. Analysis shall be performed utilizing analytical tools, simulations and models of the on–board hardware (including sensor errors, structural dynamics, mating alignment, and thermal deformation) and software. The verification shall be considered successful when the analysis data demonstrates that the RS can control the attitude rates to within +/– 0.20 degrees per second per axis.

(3) The RS shall control transient rates in three axes during translation maneuvers. Verification of this requirement shall be done by demonstration. The demonstration will be performed utilizing Russian flight software and hardware models. The demonstration shall be considered successful if the transient rates are maintained in three axes during translation maneuvers.

(4) The RS shall limit the time period of transient rates during translation maneuvers. Verification of this requirement shall be done by demonstration. The demonstration will be performed utilizing Russian flight software and hardware models. The demonstration shall be considered successful if the time period of the transient rates are limited during translation maneuvers.

(5) The RS shall have the capability to control to TEA attitudes using propulsive effectors. Verification of this requirement shall be done by demonstration. The demonstration shall be performed utilizing US and Russian flight software and hardware models. The verification shall be considered successful if the demonstration proves that the RS can maintain a TEA using only propulsive effectors.

(6) Reserved.

(7) The RS shall monitor convergence of the actual attitude relative to the commanded attitude and provide notification to the crew of failure to converge. Verification of this requirement shall be done by test. The test shall be performed utilizing US and Russian flight software and hardware models. The verification shall be considered successful if the crew receives the failure notification from the RS.

(8) The RS shall execute attitude control commands originating from the crew when using propulsive effectors. Verification of this requirement shall be done by demonstration. The demonstration shall be performed utilizing US and Russian flight software and hardware models. The verification shall be considered successful if the RS receives the commands from the crew and processes the commands.

(9) The RS shall monitor propellant usage relative to the predicted propellant usage and provide notification to the RGS and crew of excessive propellant usage during propulsive attitude control. Verification of this requirement shall be done by demonstration. Demonstration shall be performed utilizing US and Russian flight software and hardware models. The verification shall be considered successful if the RS status data shows that the RS monitors propellant usage relative to the predicted propellant usage and provides notification to the RGS and crew of excessive propellant usage during propulsive attitude control.

(10) The RS shall support docking operations with the Orbiter for the time period of two orbital revolutions. Verification of this requirement shall be done by demonstration. Demonstration shall be performed utilizing U.S. and Russian flight software and hardware models. The verification shall be considered successful if the analysis shows that the RS supports docking operations with the Orbiter for the time period of two orbital revolutions.

(11) The RS Motion Control System's contribution to the peak to peak angular motion (dynamic error range) shall be within +/– 0.8 degrees (3 sigma) per axis in the SM reference frame during Orbiter approach and station–keeping. Verification of this requirement shall be done by analysis. Analysis shall be performed by the RSA, utilizing analytical tools, simulations and models of the ground and onboard hardware (including sensor errors and structural dynamics) and software. Analytical tools which are capable of providing integrated RS/USOS flex and rigid body analysis shall be used. The verification shall be considered successful when the data demonstrates that the RS Motion Control System's contribution to the peak to peak angular motion is within +/– 0.8 degrees per axis during Orbiter approach and station–keeping.

(12) The RS Motion Control System shall maintain the attitude knowledge of the SM reference frame relative to the true LVLH coordinates to within 0.5 degrees per axis during Orbiter docking operations. Verification of this requirement shall be done by analysis. Analysis shall be

performed by the RSA. The verification shall be considered successful when the data demonstrates that the RS Motion Control System maintains the attitude knowledge of the SM reference frame relative frame to the true LVLH coordinates to within 0.5 degrees per axis during Orbiter docking operations.

(13) The RS Motion Control System shall maintain angular rate of the SM reference frame relative to the true LVLH coordinates to within 0.04 degrees per second per axis during Orbiter approach and station–keeping. Verification of this requirement shall be done by analysis. Analysis shall be performed by the RSA, utilizing analytical tools, simulations and models of the ground and on–board hardware (including sensor errors and structural dynamics) and software. Analytical tools which are capable of providing integrated RS/USOS flex and rigid body analysis shall be used. The verification shall be considered successful when the data demonstrates that the RS Motion Control System maintains the angular rate of the SM reference frame relative to the true LVLH coordinates to within 0.04 degrees per second per axis during Orbiter approach and station–keeping.

(14) The RS MCS shall maintain attitude within +/– 3.0 degrees per axis in the SM reference frame when controlling to LVLH or inertial attitude with propulsive effectors or with nonpropulsive effectors assisted by propulsive effectors. Verification of this requirement shall be done by analysis. Analysis shall be performed by the RSA, utilizing analytical tools, simulations, and models of the ground and onboard hardware and software. Analytical tools which are capable of providing integrated RS/USOS flex and rigid body analysis shall be used. The verification shall be considered successful when the data demonstrates that the attitude is held within tolerance of +/– 3.0 degrees per axis per orbit with respect to LVLH or inertial.

(15) The RS shall maintain attitude within +/– 10.0 degrees of the TEA attitude. Verification of this requirement shall be done by analysis in the SM reference frame. Analytical tools which are capable of providing simulations of the quasi–steady dynamic environment (low frequencies such as gravity gradient, on–orbit induced rotation and aerodynamics), the structural dynamics (due to flexible vibration modes) sources of acceleration disturbances, and station time domain shall be used for the analysis. The verification shall be considered successful when the data demonstrates that the RS can maintain attitude within +/– 10.0 degrees of the TEA attitude in the SM reference frame.

(16) The RS shall control attitude rates to within +/– 0.03 degrees per second for the X axis and +/– 0.015 degrees per second for the Y and Z axes, with respect to the commanded attitude when not performing translational or rotational maneuvers. Verification of this requirement shall be done by analysis. Analysis shall be performed to verify requirement compliance, utilizing analytical tools which are capable of providing the quasi–steady dynamic environment (low frequencies such as gravity gradient, on–orbit induced rotation and aerodynamics), the structural dynamics (due to flexible vibration modes) sources of acceleration disturbances, and station time domain and the integrated RS/ISS flex and rigid body analysis. The verification shall be considered successful when the analysis shows that the RS can control attitude rates to within +/– 0.03 degrees per second for the X axis and +/– 0.015 degrees per second for the Y and Z axes, with respect to the commanded attitude when not performing translational or rotational maneuvers.

(17) The RS shall provide attitude control of the fully mated Space Station/Orbiter/other external vehicles configurations. Verification of this requirement shall be done by analysis. The verification shall utilize RS and Russian hardware models integrated with USOS flight software and hardware models. The station configuration for the analysis shall be that given in the requirement. The verification shall be considered successful if the analysis indicates that the Space Station / Orbiter / other mated vehicles are controllable.

(18) The RS shall be able to enable or inhibit individual thrusters by direct command originating from RGS or crew. Verification of this requirement shall be done by test. Test shall be performed utilizing US and Russian flight software and hardware models. The verification shall be considered successful if the firing or inhibit commands, sent from RGS or crew, are received and processed correctly by the RS and individual thrusters are either enabled or inhibited.

(19) The RS shall control the attitude and attitude rates while executing maneuvers to alter the on–orbit Space Station attitude. Verification of this requirement shall be done by demonstration. Demonstration shall be performed utilizing US and Russian flight software and hardware models. The verification shall be considered successful if the attitude and attitude rates are controlled during maneuver execution.

(20) The RS shall be capable of an angular maneuver rate of at least 0.10 degrees per second per axis. Verification of this requirement shall be done by analysis. Analysis shall be performed by the RSA, utilizing analytical tools, simulations and models of the ground and on–board hardware (including sensor errors, structural dynamics, mating alignment, and thermal deformation) and software. The verification shall be considered successful if the RS executes maneuvers of at least 0.10 degrees per second per axis.

(21) The RS shall maintain Space Station attitude within +/– 15 degrees in yaw and roll, +15 to –20 degrees in pitch with respect to (0, 0, 0) yaw, pitch, and roll orientation in the reference frame to meet thermal constraints and power generation requirements and to minimize the use of propellant. Verification of this requirement shall be done by analysis. Analytical tools which are capable of providing simulations of the quasi–steady dynamic environment (low frequencies such as gravity gradient, on–orbit induced rotation and aerodynamics), the structural dynamics (due to flexible vibration modes) sources of acceleration disturbances, and station time domain shall be used for the analysis. The verification shall be considered successful when the data demonstrates that the RS can maintain attitude within +/– 15 degrees in yaw and roll, +15 to –20 degrees in pitch with respect to (0, 0, 0) yaw, pitch, and roll orientation in the LVLH reference frame.

(22) The RS shall provide the capability to hold the current attitude of the SM reference frame with respect to LVLH at the instant this command is received. Verification of this requirement shall be done by demonstration. Demonstration shall be performed by utilizing U.S. and Russian flight software and hardware models. The verification shall be considered successful if the correct LVLH attitude is maintained.

(23) The RS shall provide a mate/demate indicator to the USOS when an external vehicle mates/demates with the RS. Verification of this requirement shall be done by demonstration. Demonstration shall be performed by utilizing U.S. and Russian flight software and hardware models. The verification shall be considered successful if the mate/demate indicator is provided to the USOS.

(24) The RS Motion Control System’s contribution to the peak to peak angular motion (dynamic error range) shall be within 4.0 degrees peak to peak per axis in the SM reference frame after Orbiter departure (after activation of the MCS attitude control). Verification of this requirement shall be done by analysis. Analysis shall be performed by the RSA, utilizing analytical tools, simulations and models of the ground and onboard hardware (including sensor errors and structural dynamics)and software. Analytical tools which are capable of providing integrated RS/USOS flex and rigid body analysis shall be used. The verification shall be considered successful when the data demonstrates that the RS Motion Control System’s contribution to the peak to peak angular motion is within 4.0 degrees peak to peak per axis in the SM reference frame after Orbiter departure.

(25) The RS Motion Control System shall maintain angular rate of the SM body axes relative to the true LVLH coordinates to within 0.1 degrees per second per axis after Orbiter departure (after activation of the MCS attitude control). Verification of this requirement shall be done by analysis. Analysis shall be performed by the RSA, utilizing analytical tools, simulations and models of the ground and onboard hardware (including sensor errors and structural dynamics) and software. Analytical tools which are capable of providing integrated RS/USOS flex and rigid body analysis shall be used. The verification shall be considered successful when the data demonstrates that the RS Motion Control System maintains the angular rate of the SM body axes relative to the true LVLH coordinates to within 0.1 degrees per second per axis after Orbiter departure.

(26) The RS shall monitor convergence of the actual attitude relative to the commanded attitude and provide notification to the RGS of failure to converge. Verification of this requirement shall be done by test. The test shall be performed during Stage verification utilizing U.S. and Russian flight software and hardware models. The verification shall be considered successful if the RGS receives the failure notification from the RS.

(27) The RS shall provide three–axis attitude control when the CV is performing translational maneuvers with the CV small thrusters. Verification of this requirement shall be done by test. The tests shall be performed utilizing Russian flight software and hardware models. The verification shall be considered successful if the RS provides three–axis attitude control when performing a translational maneuver with the CV small thrusters.

(28) When mated with the Orbiter, the RS shall maintain Space Station attitude within +/– 15 degrees in roll and yaw, + 25 to 0 degrees in pitch with respect to (0,0,0) yaw, pitch, and roll orientation in the LVLH reference frame. Verification of this requirement shall be done by analysis. Analytical tools which are capable of providing simulations of the quasi–steady dynamic environment (low frequencies such as gravity gradient, on–orbit induced rotation and aerodynamics), the structural dynamics (due to flexible vibration modes) sources of acceleration disturbances, and station time domain shall be used for the analysis. The verification shall be considered successful when the data demonstrates that when mated with the Orbiter, the RS can maintain a Space Station attitude within +/– 15 degrees in roll and yaw, + 25 to 0 degrees in pitch with respect to (0,0,0) yaw, pitch, and roll orientation in the LVLH reference frame.

d. From activation of the RS nonpropulsive effectors:

The RS shall control attitude rates to within +/– 0.015 degrees per second per axis, with respect to the commanded attitude when not performing translational or rotational maneuvers. Verification of this requirement shall be done by analysis. Analysis shall be performed to verify requirement compliance, utilizing analytical tools which are capable of providing the quasi–steady dynamic environment (low frequencies such as gravity gradient, on–orbit induced rotation and aerodynamics), the structural dynamics (due to flexible vibration modes) sources of acceleration disturbances, and station time domain and the integrated RS/ISS flex and rigid body analysis. The verification shall be considered successful when the analysis shows that the RS can control attitude rates to within +/– .015 degrees per second per axis, with respect to the commanded attitude when not performing translational or rotational maneuvers.

e. From activation of the USOS MDMs in US Lab:

(1) All commands and data transferred between the RS and USOS shall be in accordance with SSP 50097 ICD. Verification of this requirement shall be done by test. The test shall verify that commands and data transferred between the RS Central Computers and the USOS are in accordance with SSP 50097 ICD. The verification shall be considered successful if the test proves that the RS can accept and provide commands and data in accordance with SSP 50097 ICD. This test is done in USA.

(2) The RS shall monitor convergence of the actual attitude relative to the commanded attitude and provide notification to the USOS of failure to converge. Verification of this requirement shall be done by test. The test shall be performed utilizing US and Russian flight software and hardware models. The verification shall be considered successful if the USOS receives the failure to converge notification from the RS.

(3) The RS shall execute attitude maneuver abort commands originating from the USOS when using propulsive effectors. Verification of this requirement shall be done by demonstration. The demonstration shall be performed utilizing US and Russian flight software and hardware models. The verification shall be considered successful if the RS receives and processes the attitude maneuver abort commands from the USOS.

(4) The RS shall monitor propellant usage relative to the predicted propellant usage and provide notification to USOS of excessive propellant usage during propulsive attitude control. Verification of this requirement shall be done by demonstration. Demonstration shall be performed utilizing US and Russian flight software and hardware models. The verification shall be considered successful if the RS monitors propellant usage relative to the predicted propellant usage and provides notification to the USOS of excessive propellant usage during propulsive attitude control.

(5) The RS shall be able to enable or inhibit individual thrusters by direct command originating from USOS. Verification of this requirement shall be done by test. The test shall be performed utilizing US and Russian flight software and hardware models. The verification shall be considered successful if the RS will process the firing commands received from the USOS.

(6) The RS shall send propulsive effector data to the USOS. Verification of this requirement shall be done by demonstration. Demonstration shall be performed utilizing US and Russian flight software and hardware models. The verification shall be considered successful if the USOS receive the data from the RS during demonstration.

f. From activation of the SDMS on S0:

The RS shall execute timed sequences of thruster firings to support structural testing. Verification of this requirement shall be done by test. It is assumed that the timed sequences of thruster commands shall be part of a procedure. The test shall be performed utilizing US and Russian flight software and hardware models. The verification shall be considered successful if the RS will process firing commands upon receiving test activation commands from the USGS or crew during demonstration.

g. When CV is performing the translation maneuvers:

(1) The RS shall control steady–state rates in two axes. Verification of this requirement shall be done by demonstration. The demonstration will be performed utilizing Russian flight software and hardware models. The demonstration shall be considered successful if the steady state rates are maintained in two axes.

(2) The RS shall control transient attitude rates in two axes. Verification of this requirement shall be done by demonstration. The demonstration will be performed utilizing Russian flight software and hardware models. The demonstration shall be considered successful if the transient rates are maintained in two axes during translation maneuvers.

(3) The RS shall limit the time period of transient rates in two axes. Verification of this requirement shall be done by demonstration. The demonstration will be performed utilizing Russian flight software and hardware models. The demonstration shall be considered successful if the time period of the transient rates in two axes are limited during translation maneuvers.

(4) The RS shall have the capability to control to inertial attitude about two axes. Verification of this requirement shall be done by demonstration. Demonstration shall be performed during Stage verification utilizing US and Russian flight software and hardware models. The verification shall be considered successful if the RS status data shows that RS can control to inertial about two axes.

(5) TBD With a crew installed matching unit providing connection between the SM terminal computer and the CV small thrusters:

(a) The CV shall respond to thruster on/off commands from the RS.

(b) The CV shall send propulsive effector data (status of thruster operations – on/off) to the RS.

This requirement shall be verified by ground tests in accordance with the Test Plans. The tests will be considered successful when the CV thrusters respond correctly to commands from the SM TC and when the CV send appropriate CV propulsive effector status data to the SM.

4.3.2.1.1.2.2.2 Provide desaturation torque.

a. From activation of the USOS MDMs:

(1) All commands and data transferred between the RS and USOS shall be in accordance with SSP 50097 ICD. Verification of this requirement shall be done by test. The test shall verify that commands and data transferred between the RS Central Computers and the USOS are in accordance with SSP 50097 ICD. The verification shall be considered successful if the test proves that the RS can accept and provide commands and data in accordance with SSP 50097 ICD. This test is done in USA.

(2) The RS shall provide a torque using propulsive effectors when commanded by the USOS and crew for nonpropulsive effector desaturation. Verification of this requirement shall be done by demonstration. The demonstration shall be performed utilizing U.S. and Russian flight software and hardware models. The verification shall be considered successful if the RS provides a torque using propulsive effectors for USOS nonpropulsive effector desaturation at the command of the USOS or crew.

(3) The RS shall provide an indication of initiation of propulsive effector firings and status of propulsive effectors during desaturation activities to the USOS and crew. Verification of this requirement shall be done by demonstration. The demonstration shall be performed utilizing US and Russian flight software and hardware models. The verification shall be considered successful if the USOS receives the data and status from the RS during desaturation activities.

(4) The RS shall provide a change in angular momentum within 20 % magnitude and within +/– 15 degrees angle when commanded by the USOS. Verification of this requirement shall be done by analysis. Analytic models capable of modeling vehicle uncertainties, as well as, U.S. and RS hardware and software will be used for the analysis. The verification shall be considered successful if the magnitude and direction of the desaturation are within specified limits.

(5) The RS shall have the capability to provide a torque with a specified thruster pulse pattern when desaturation is commanded for the U.S. nonpropulsive effectors by the USOS and crew. The verification of this requirement shall be done by demonstration. The demonstration shall be performed utilizing U.S. and Russian flight software and hardware models. The verification shall be considered successful when the RS provides a torque with a specified thruster pulse pattern for desaturation of the U.S. nonpropulsive effectors at the command of the USOS and crew.

b. From activation of the RS nonpropulsive effectors:

(1) The RS shall provide a torque using propulsive effectors when commanded by the RGS or crew for RS nonpropulsive effectors desaturation. Verification of this requirement shall be done by demonstration. Demonstration shall be performed utilizing US and Russian flight software and hardware models. The verification shall be considered successful if the RS provides a torque using propulsive effectors when commanded by the RGS or crew for RS nonpropulsive effector desaturation.

(2) The RS shall have the capability to provide propulsive effector impulse data and status during desaturation activities to the RGS and crew. Verification of this requirement shall be done by demonstration. Demonstration shall be performed utilizing US and Russian flight software and hardware models. The verification shall be considered successful if the RGS and crew receive the data and status from the RS during desaturation activities.

(3) The RS shall have the capability to provide a torque with a specified thruster pulse pattern for use by its propulsive effectors when both a desaturation command for the RS nonpropulsive effectors is issued and the SSRMS is active. The verification of this requirement shall be done by demonstration. The demonstration shall be performed utilizing US and Russian flight software and hardware models. The verification shall be considered successful when the RS provides a torque with a specified thruster pulse pattern for desaturation of the RS nonpropulsive effectors when the SSRMS is active.

c. From activation of the SM

The RS shall have the capability to store a thruster pulse pattern provided by the USOS, RGS, and crew for use by the RS to provide desaturation. The verification of this requirement shall be done by demonstration. The demonstration shall be performed utilizing U.S. and Russian flight software and hardware models. The verification shall be considered successful when the RS stores uplinked thruster pulse pattern information for use during USOS and crew commanded desaturation.

AGREED.

4.3.2.1.1.3 Reserved.

4.3.2.1.1.4 Mode – microgravity.

Verification requirements not applicable.

4.3.2.1.1.4.1 Support microgravity experiments.

4.3.2.1.1.4.1.1 Limit acceleration.

The RS capability to limit accelerations in the microgravity mode shall be verified, for frequencies through 10.0 Hz, by analysis through the integrated system simulation models, and

for frequencies above 10.0 Hz through 300 Hz, by test. The vibratory models shall determine the acceleration response at the structural mounting interfaces of the internal user payload locations to mechanical RS disturbances with frequencies through 10 Hz. The simulation models and disturbance inputs shall themselves be validated to the maximum extent possible by test correlation. For frequencies above 10.0 Hz through 300 Hz, tests shall determine the acceleration response at the RS/USOS interface to mechanical and acoustic RS disturbances. The verification process shall adhere to the analysis and test methods, and verification criteria as specified in the Russian Microgravity Control Plan. The verification shall be considered successful when the analyses and tests show that the RS will meet the specified acceleration performance levels when exposed to the operational conditions consistent with microgravity mode.

AGREED.

4.3.2.1.1.4.1.2 Limit angular momentum disturbance.

Verification shall be done by analysis. This analysis will consist of a comparison of the calculated angular momentum due to RS open loop onboard disturbances by Root Sum Square method to the angular momentum allocation to verify that the allocation is not exceeded. The verification shall be considered successful when analysis shows open loop disturbance angular momentum is within limits.

AGREED.

4.3.2.1.1.5 Mode – Survival.

Verification requirements not applicable.

4.3.2.1.1.6 Mode – Proximity operations.

Verification requirements not applicable.

4.3.2.1.1.6.1 Provide automated collision avoidance maneuvers.

The capability for the Russian external vehicles to execute automated collision avoidance maneuvers to provide short and long term safe trajectories if an abort is initiated by onboard software, vehicle crew, ISS crew or RGS shall be verified by analysis. The analysis shall consider the methods and their alternatives for initiating the different types of aborts and their regions of applicability, including the necessary implementation timeline. The verification shall be considered successful if the analysis shows that: the timeline is sufficient for selection, initiation and execution of the appropriate abort procedure; and, when executed, the automated abort procedures result in an abort maneuver sequence and subsequent short and long term trajectories that avoids a collision with the ISS.

AGREED.

4.3.2.1.1.6.2 Reserved.

4.3.2.1.1.6.3 Provide docking status.

Verification that the ISS docking mechanisms provides an indication of the docking status to the ISS crew and the Russian ground segment during Russian vehicle docking operations shall be accomplished by inspection of design documents and lower level qualification records and a demonstration. The inspection shall confirm the capability of docking mechanisms to generate

unambiguous contact, capture and hard dock signals and interface those signals to the RS data system. The verification shall be considered successful if the records show successful compliance with tests performed on the FEU and the interface to the RS data system and successful completion of a demonstration showing the docking status presented to the ISS crew and RS ground using simulated docking status signals.

AGREED.

4.3.2.1.1.6.4 Support external vehicle to ISS relative navigation.

Verification that the RS accommodates cooperative navigation systems for external vehicles to perform rendezvous with the ISS shall be accomplished by inspection and analysis. The inspection shall show that the detailed design, integration, and operation plan for the ISS based equipment, i.e., KURS radar, omni–antennas, amplifiers, docking port antennas, video cameras, docking targets and lights, and crew displays and controls is provided to support the proposed rendezvous and docking operations. An analysis of the omni–antenna and docking antenna patterns shall be performed to assess support coverage. The verification shall be considered successful if the inspection of the detailed design, integration, and operation plan for the cooperative navigation systems supports the proposed rendezvous and docking operations, and the analysis data shows the antenna coverage (including consideration of blockage and interference periods) is adequate to support both successful and retry rendezvous and docking attempts.

AGREED.

4.3.2.1.1.6.5 External vehicle monitoring during rendezvous approach.

Verification that the RS can determine from station data, external vehicle status data and visual information when it is no longer safe for a Russian incoming vehicle to dock with the ISS shall be accomplished by analysis. The analysis shall consider the only the onboard information content, its availability during the approach and the procedures which will be implemented to assess that information with respect to the reference rendezvous and docking profile. The verification shall be considered successful if the analysis data shows the adequacy and timeliness of the external vehicle monitoring information and its assessment is sufficient to support a waive–off decision.

AGREED.

4.3.2.1.1.6.6 Mission planning – rendezvous and docking.

Verification that the on–orbit software and RGS mission planning can produce RS external vehicle rendezvous and docking reference profiles that provide the required minimum safety features shall be accomplished by analysis and demonstration. The analysis shall consider 3 sigma dispersed final rendezvous trajectories targeted out–of–plane to the range of ISS rendezvous altitudes both during the assembly sequence and subsequent to assembly complete. The demonstration shall show that detailed rendezvous and docking reference profiles can be produced and procedures provided to implement them. The verification shall be considered successful if: (1) the analysis shows the final rendezvous trajectories pass safely by the ISS, if no further maneuvers are conducted, and that the rendezvous and proximity operations trajectories can remain outside the 400m ”keep out zone” until start of the fly around phase; and (2) the demonstration produces a detailed reference profile and associated procedures.

AGREED.

4.3.2.1.1.6.7 External vehicle video transmission.

No verification is required for ground equipment (hardware and software) functions which have been demonstrated in previous Russian space programs.

AGREED.

4.3.2.1.1.7 Mode – External operations.

Verification requirements not applicable.

AGREED.

4.3.2.1.1.7.1 Support EVA operations.

4.3.2.1.1.7.1.1 Support voice and data communications.

Voice communication shall be verified by analysis. The analysis shall be base upon the RSA voice communication tests. The analysis shall be considered successful when the data shows that required data communication is provided simultaneously through hard–line and Ultra High Frequency (UHF) radio frequency before, during, and after EVA operations. The analysis shall show that Russian EVA communications can be relayed to the USOS in a duplex mode for up to two Russian crewmembers, and the RS on–orbit elements can support the relay of the US voice from the USOS to the Russian EVA crewmembers in a duplex mode.

AGREED.

4.3.2.1.1.7.1.2 Communication with U.S. Airlock Orlan suits.

Communication to Orlan suited crew in the U.S. Airlock shall be verified by analysis. The analysis shall be considered successful when the data shows the RF power level present when transmitting meets or exceeds the requirements of SSP 42121, appendix I.

AGREED.

4.3.2.1.1.7.1.3 Reserved.

4.3.2.1.1.7.1.4 Support station ingress.

a. Space station ingress shall be verified by analysis. The analysis shall be based upon the ingress demonstrations and the corresponding data from element and end–item verification activities. The analysis shall be considered successful when the data shows that for suited crewmember ingress, the required mobility aids have been provided and located for controlled and tethered ingress.

b. Repressurization shall be verified by analysis. The analysis shall be based upon repressurization tests and the corresponding data from element and end–item Certification activities. The analysis shall be considered successful when the data shows that the nominal repressurization rate from vacuum to Space Station atmosphere is less than 5 mm Hg per sec.

c. Maximum emergency repressurization shall be verified by analysis. The analysis shall be based upon the maximum repressurization tests and the corresponding data from element and end–item verification activities. The analysis shall be considered successful when the data shows that the maximum repressurization rate from vacuum to Space Station atmosphere is less than 10 mm Hg per sec.

AGREED.

4.3.2.1.1.7.1.5 Illuminate external work sites and translation paths.

External illumination shall be verified by analysis. The analysis shall be based upon documentation defining translation path and external worksite lighting, illumination tests and analyses, and the corresponding data from element and end–item verification activities. The analysis shall be considered successful when the data shows, for each translation path and external worksite, that the minimum illumination level is provided.

AGREED.

4.3.2.1.1.7.1.6 Track external crew.

Tracking of external crew members shall be verified by analysis. The analysis shall be based upon documentation defining translation paths and external worksites, demonstrations, and the corresponding data from the Element verification activities. The analysis shall be considered successful when the data shows that the capability to track the external crewmember is provided.

AGREED.

4.3.2.1.1.7.1.7 Capability: Self rescue of EVA Crew.

Crew self rescue capability shall be verified by analysis, test, demonstration and inspection. Analysis shall be based upon documentation defining the interface between the Orlan SAFER and the ISS Orlan–M suit, and upon the engineering analysis of inertial components for the ISS Orlan–M–suited crewmember. Analysis will be performed using computer simulation of flight characteristics. Tests will be performed on the pressurized and electrical systems under simulated launch and on–orbit EVA environments. The demonstrations shall confirm ISS Orlan–M–suited crewmember human interfaces and operations using 1–G, hydrolab and IL–76 evaluations of don/doff, airlock ingress/egress, stowage and EVA operations. Visual inspections shall confirm Orlan SAFER and ISS Orlan–M–suit physical parameters using interface verification fixtures. The verification shall be considered successful after the above methods are completed with positive results. Responsibilities for verification shall be jointly defined.

AGREED

4.3.2.1.1.7.2 Accommodate Mobile Servicing System.

Verification for this paragraph is contained in section 4.3.7.10.

4.3.2.1.1.8 Mode – crew delivery and return.

Verification requirements not applicable.

4.3.2.1.1.8.1 Support crew delivery and return.

4.3.2.1.1.8.1.1 Scheduled crew delivery and return.

Verification of the requirement to support scheduled crew delivery and return will be based on flight experience and/or certification for use from previous applications.

AGREED.

4.3.2.1.1.8.2 Support unplanned crew return.

4.3.2.1.1.8.2.1 Support unplanned crew return.

Verification of the requirement to support scheduled crew delivery and return will be based on flight experience and/or certification for use from previous applications.

AGREED.

4.3.2.1.2 External and proximity operations.

4.3.2.1.2.1 Mode – Proximity operations.

Verification requirements not applicable.

4.3.2.1.2.2 Mode – External operations.

Verification requirements not applicable.

4.3.2.1.3 State – Support mission.

Verification requirements not applicable.

4.3.2.1.3.1 Reserved.

4.3.2.1.3.2 Mode – Space transport.

Verification requirements not applicable.

4.3.2.1.3.2.1 Support resupply and return.

4.3.2.1.3.2.1.1 Transport cargo.

Transport Cargo shall be verified by analysis. The analysis shall be based on the segment level qualification results and Space Station configuration data. The analysis shall be considered successful when the data shows that the specified cargo can be transported by RS resupply vehicles.

AGREED.

4.3.2.2 Physical characteristics.

4.3.2.2.1 Approach and departure corridor.

The minimum unobstructed envelope for Orbiter and Russian vehicle approach and departure specified in Figures 6 and 7 shall be certified by analysis. The analysis shall be based upon inspection of flight element drawings and RS and USOS assembly drawings and analysis of obstructions in or close to the approach and departure corridors. The analysis shall be considered successful when the data shows that no obstructions are inside the minimum approach and departure corridors for Orbiter and the Russian vehicle.

AGREED.

4.3.2.2.2 Establish translation paths.

a. The controlled, tethered, and 2–handed translation along translation paths shall be verified by analysis. The analysis shall be based upon documentation defining the required translation paths and Element Demonstration data. If the handrail gaps are greater than 24 inches, the verification shall be performed by demonstration. The certification analysis shall be considered successful when the data shows that for each translation path, handholds, handrails, or a slide wire has been provided for controlled, tethered, and 2–handed translation.

b. The handrail gaps shall be verified by inspection. The inspection shall be based upon documentation defining this translation path and an inspection of flight element drawings shall be performed to ensure that the spacing between handrails shall be less than or equal to 23.6 inches (600 mm). The analysis shall be considered successful when the data shows that for this translation path, the handrail gaps are less than or equal to 23.6 inches (600 mm).

c. The EVA operations access corridor shall be verified by inspection. An inspection of the flight element drawings shall be performed to ensure that the reserved EVA operations access corridor can accommodate the EVA crew operations. The inspection shall be considered successful when the flight element drawings show a reserved EVA operations access corridor exists along the length of the RS.

d. Handrail grasp and radius clearances, and grip length shall be verified by analysis and inspection. Analysis shall be based upon the documentation defining the layout and spacing of handrails and other external hardware on the exterior of the RS. Inspections shall be performed on flight and training hardware in selected areas of close clearances during 1–G and hydrolab evaluations. Verification shall be considered successful when it is shown that there is compliance with the criteria given for grasp and radius clearances and grip length for external handrails on the RS.

AGREED.

4.3.2.2.3 Establish worksites.

a. The external worksites shall be verified by analysis. The analysis shall be based upon documentation defining EVA tasks and corresponding external worksites and Element Demonstration data. The analysis shall be considered successful when the data shows that for each identified EVA task, an external worksite is provided for the control, tethering, and restraint of the crew and equipment.

b. The type of worksites shall be verified by analysis. The analysis shall be based upon documentation defining EVA tasks and element demonstration data. The analysis shall be considered successful when the data shows that an identified free–float task was conducted with one hand, linear forces were less than specified, the objects involved were less than 50 kg, 1 meter in the greatest dimension, or less than 0.6 m by 0.6 m by 0.6 m; and all objects incorporated soft dock/capture features.

AGREED.

4.3.2.2.3.1 Common restraint hardware.

The compatibility of RS restraint hardware (foot restraints and common tethers) with the U.S. and Russian pressurized EVA suits shall be verified by analysis and demonstration. The analysis shall be based upon engineering test data and drawings defining the physical interfaces between hardware and suits, and the structural integrity of hardware under simulated EVA loads. EVA suit interfaces with the common restraint hardware shall be demonstrated during fit checks, hydrolab, 1–G, IL–76, and on–orbit flight tests. The verification shall be considered successful when it is shown that the common restraint hardware will adequately restrain both the U.S. and Russian EVA suits.

AGREED.

4.3.2.2.4 Provide external and internal stowage of tools and hardware.

The internal storage of Orlan space suit support equipment, tools and consumables shall be verified by analysis. The analysis shall be based on the inspection of the flight element drawings to ensure that the RS provides internal stowage of space suits support equipment, tools and consumables. The analysis shall be considered successful when the flight element drawings show stowage for suit support equipment, tools and consumables.

AGREED.

4.3.2.2.5 ISS storage requirements.

Verification shall be by analysis of design (Preliminary) documentation. Verification shall be considered successful when analysis of design (Preliminary) documentation shows the RS meets the requirements as specified herein.

4.3.2.2.6 Transfer external crew and hardware.

a. Transfer and restraint of crew and equipment shall be verified by analysis. The analysis shall be based upon documentation defining the translation paths translation aides, and restraints used for transfer and restraint of crew and equipment, translation demonstrations and the corresponding data from element and end–item verification activities. The analysis shall be considered successful when the data shows, for each translation path and mode, that a translation aid and restraint is provided that supports controlled transfer and restrain of both crew and equipment.

b. The provision of common restraint hardware shall be verified by analysis of manifest, stowage, and installation documentation for the RS. The analysis shall be considered successful when it is shown that restraint hardware, which is compatible with both the U.S. and Russian pressurized EVA suits, is provided to the ISS.

AGREED.

4.3.2.2.7 Distribute commands and data.

a. Verification for this paragraph is contained in paragraph 4.3.2.2.7.1.

b. TBD

AGREED.

4.3.2.2.7.1 Provide output amplitude.

The MIL–STD–1553 data buses shall be verified by test. The tests shall be performed as follows:

Note: The term ”external” in this section, refers to devices that are either contained in another element, or are connected to an external stub location within the element (e.g., Payload Rack).

Amplitude Test #1

This test shall be conducted after the MIL–STD–1553 harnesses have been installed in the element, but prior to rack/TIU installation. During this test, all MIL–STD–1553 terminals shall be temporarily disconnected. All stubs shall be temporarily terminated with 1 Kohm resistive load.

Test Harness 1 (Figure 15) is connected to the bus segment’s external interface connector at the interface specified in Table XX. In the case of ”feed–through” bus segments, Test Harness 2 Figure 16) is connected to the opposite end of the bus.

A MIL–STD–1553 word test pattern with a level of 18 Vpeak–to–peak(p–p) shall be injected by the MIL–STD–1553 signal generator into Test Harness 1. The peak–to–peak voltage and the digitized waveform are digitally recorded at each stub location using Test Harness 3 (Figure 17). For feed–through bus segments, the peak–to–peak voltage and the digitized waveform shall also be recorded at all external interfaces except the test input interface using Test Harness 2. In all instances, the injected waveform shall be compared with the waveform recorded at each stub location to verify that no phase reversals have occurred. Each test shall be considered successful when the recorded voltage exceeds 3.6 Vp–p at bus interfaces and 2.35 Vp–p at stub interfaces.

TABLE XX. Test interface

Element	Bus	Test Interface
SM	CB GNC–1	FGB
SM	CB GNC–2	FGB
SM	LB CHECS–1	FGB
SM	RS Bus 1	FGB (BC Internal)
SM	RS Bus 2	FGB (BC Internal)
SM	RS Bus 3	FGB (BC Internal)
SM	RS Bus 4	FGB (BC Internal)

AGREED.

Amplitude Test #2

All MIL–STD–1553 terminals, for the bus under test, are installed and powered on for this test, with the exception of MDM bus controllers, which remain connected but are powered off.

Test Harness 1 (Figure 15) is connected to the bus segment's external interface connector at the interface specified in Table XX. In the case of "feed–through" bus segments, Test Harness 2 (Figure 16) is connected to the opposite end of the bus.

Active Bus Controller Connected to the Bus Under Test

For each BC and each active RT on the bus, the peak–to–peak voltage and the digitized waveform shall be recorded at the bus segment's external interface using Test Harness 1. For feed–through bus segments, the peak–to–peak voltage and the digitized waveform shall also be recorded at all element bus interfaces using Test Harness 2. Any BC command word, and any RT status can be used for this test. Each test shall be considered successful if the recorded voltage exceeds 3.6 Vp–p at bus interfaces and 2.35 Vp–p at stub interface.

No Active Bus Controller Connected to the Bus Under Test

A MIL–STD–1553 command word with a level of 18 Vp–p shall be injected by the MIL–STD–1553 signal generator into Test Harness 1, such that an individual RT shall generate a status word response. For each active RT, the peak–to–peak voltage and the digitized waveform are recorded at the bus segment's external interface using Test Harness 1. Each test shall be considered successful if the recorded voltage exceeds 3.6 Vp–p at bus interfaces and 2.35 Vp–p at stub interfaces.

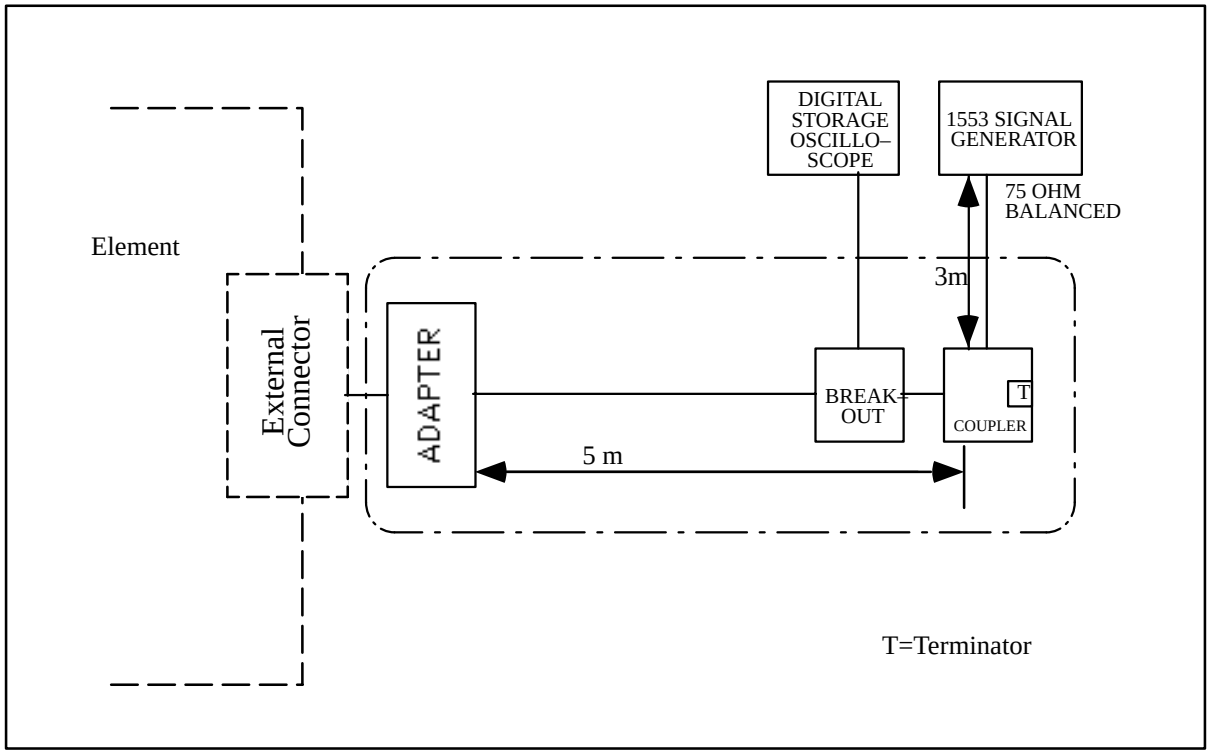

FIGURE 15. Test harness 1

AGREED.

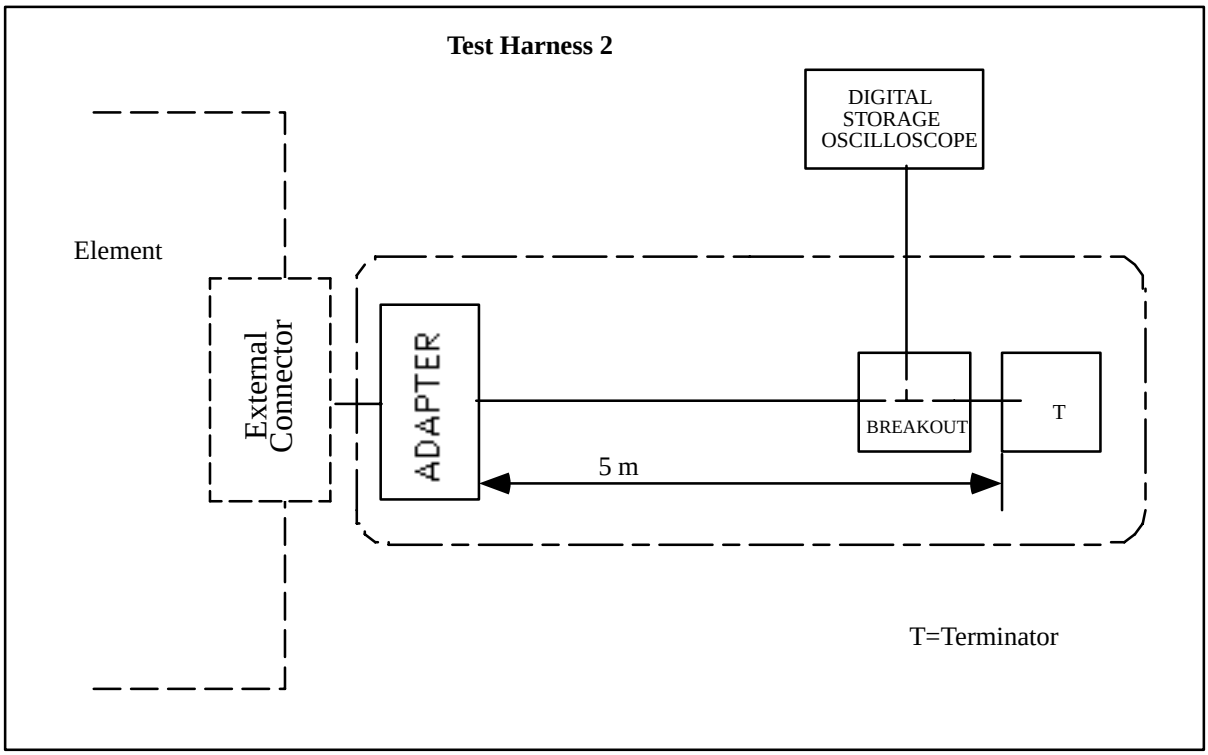

FIGURE 16. Test harness 2

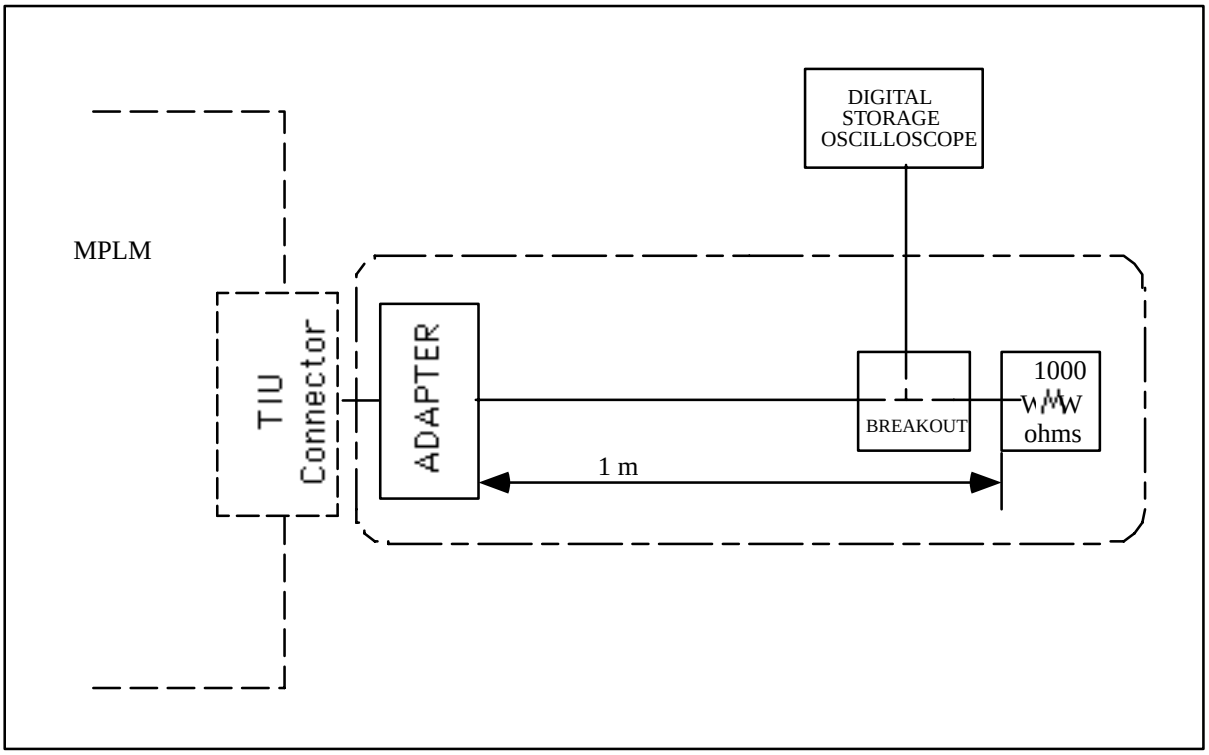

FIGURE 17. Test harness 3

4.3.2.2.8 SPP.

Verification shall be in accordance with NASA/RSC–E/3411–SPP.

4.3.2.2.9 ATV.

Verification shall be in accordance with SSP 50129 table 4.1–1.

The following requirements of SSP 50129 shall be verified prior to launch of SM:

3.1.1, 3.1.3, 3.1.4, 3.1.5, 3.1.6, 3.3.1, 3.3.2, 3.3.3, 3.4.1, 3.4.3, 3.4.4, 3.4.15.1, 3.4.15.2, 3.4.17, 3.5.1.1, 3.5.1.2, 3.5.1.3, 3.5.1.4, 3.5.1.5, 3.5.1.6, 3.5.1.7, 3.5.1.9, 3.5.2.1, 3.5.2.2, 3.5.2.3, 3.5.2.4, 3.5.3.1, 3.6.1, 3.7.1, 3.7.2.1, 3.7.2.2, 3.7.2.4.2, 3.7.3.1, 3.7.4.1, 3.7.4.2, 3.7.4.3, 3.8.2, 3.8.5, 3.9.1, 3.9.2, 3.9.5, 3.9.6, 3.9.9, 3.9.10, 3.11.1, 3.11.7, 3.11.11.1, 3.11.11.2, 3.12.1.1, 3.12.1.3, 3.12.1.5, 3.12.1.7, 3.13.1.4, 3.13.2.4.1, 3.13.2.4.2, 3.13.2.4.3, 3.13.2.4.4, 3.13.2.4.5, 3.13.2.5.3, and 3.13.2.7.3.

4.3.2.3 Reliability.

4.3.2.3.1 Failure tolerance.

RS failure tolerance shall be verified by analysis. The analysis shall be performed for each of the functions defined in Table VIII using RS systems documentation, including data from Off–Nominal Situations (ONS) analyses. The verification shall be considered successful if the analysis demonstrates that the failure tolerance of each function meets the requirements defined in Table VIII.

AGREED.

4.3.2.3.2 Service life.

Service life of RS equipment and systems shall be verified by ground testing and/or previous flight experience, and in specific situations, using analysis of equipment characteristics. Verification of service life shall be considered successful when the test results, flight experience, and/or analysis of equipment characteristics demonstrates compliance with the 15 year service life requirement of the RS.

AGREED.

4.3.2.3.3 Failure Propagation.

Requirements for nonpropagation of single failures of the RS across the RS/USOS interface shall be verified by analysis. The analysis shall be performed using RS systems documentation, including data from Off–Nominal Situations analyses. The verification shall be considered successful if the analysis demonstrates that no single failure will induce failures across the RS/USOS interface.

AGREED.

4.3.2.3.4 Redundancy status.

Requirements for redundancy status of functions which are required to operate continuously shall be verified by analysis and/or tests. The analysis shall be performed using RS systems documentation, including data from Off–Nominal Situations analyses. The verification shall be considered successful if the analyses and/or tests demonstrates that the determination of the status of the redundant paths does not interrupt the continuous operation of the function.

AGREED.

4.3.2.4 Maintainability.

4.3.2.4.1 Qualitative maintainability requirements.

Qualitative maintainability requirements shall be verified by analysis and/or inspection. The analysis shall include inspection of principles and operations of RS that will provide for maintainability of RS systems needed to maintain and restore RS supplied ISS functions. The analysis/inspection shall verify adequacy of hardware and software for restating and restoring maintenance of functions. The verification shall be considered successful when the analysis/inspection indicates adequate hardware and software for restating and restoring maintenance of functions.

AGREED.

4.3.2.4.1.1 Reserved.

4.3.2.4.1.2 Procedures and tools.

The RS's ability to provide all on–orbit procedures and tools necessary for performing maintenance on RS equipment shall be verified by analysis and/or inspection. The analysis and inspection shall be based upon data provided through drawings, lists of hardware maintenance requirements, tool lists, working procedures, and assembly documentation. The verification shall be considered successful when analysis and/or inspection of the data shows that all on–orbit procedures and tools necessary for performing maintenance on RS equipment are provided.

AGREED.

4.3.2.4.2 Quantitative maintainability requirements.

4.3.2.4.2.1 Equipment maintenance time in non pressurized areas.

Equipment maintenance time in nonpressurized areas shall be verified by analysis. Analysis shall be performed using (1) time needed to complete repairs and other maintenance, (2) maintenance frequency, and (3) station configuration. Results shall be deemed satisfactory if analysis confirms that the time required to maintain equipment in each EVA does not exceed the amount in 3.2.4.2.1, and that worksites can be left in a safe and functional condition.

AGREED.

4.3.2.4.2.2 Total Mean Maintenance Crew Hours/Year.

4.3.2.4.2.2.1 EVA Total Mean Maintenance Crew Hours/Year.

Verification of EVA TMMCH/Y shall be verified by analysis of RS maintenance time performed by crew working outside station. Analysis will address only assembly configuration and will utilize previous maintenance experience. Results shall be deemed satisfactory if analysis confirms that the time required to maintain equipment working outside the station does not exceed the amount in 3.2.4.2.2.1.

AGREED.

4.3.2.4.2.2.2 IVA Total Mean Maintenance Crew Hours/Year.

Verification of IVA TMMCH/Y shall be verified by analysis of RS maintenance time performed by crew working inside station. Analysis will address only assembly configuration and will utilize previous maintenance experience. Results shall be deemed satisfactory if analysis confirms that the time required to maintain equipment inside the station does not exceed the amount in 3.2.4.2.2.2.

AGREED.

4.3.2.4.2.3 Airlock cycles to support EVA.

Verification of the number of airlock cycles to support EVA, after assembly complete, shall be accomplished by analysis. The analysis will consider the tasks listing and the task time lines that will cover maintenance of nonpressurized areas of RS segment. The verification shall be considered successful when analysis shows that, after assembly complete, EVA maintenance tasks will not require more than 10 airlock cycles per year.

AGREED.

4.3.2.4.3 Failure Detection, Isolation and Recovery (FDIR).

4.3.2.4.3.1 Manual control of FDIR.

To assist during periods of maintenance and non–nominal activity, the RS shall provide for manual control of automatic failure detection, isolation, and recovery control processes. This does not preclude the planned use of automatic FDIR capabilities. This item shall be verified by demonstration or analysis.

AGREED.

4.3.2.4.3.2 Testing at operating location.

The RS shall detect and isolate out–of–tolerance conditions, functional anomalies, and functional operations that may manifest a catastrophic or critical hazard without removal of equipment from its operating location or use of ancillary test equipment. This item shall be verified by demonstration or analysis.

AGREED.

4.3.2.4.3.3 Manual FDIR.

The categories of equipment specified in 3.2.4.3.3 shall utilize crew interaction or crew observation for failure detection, isolation, annunciation, and recovery. This item shall be verified by demonstration or analysis. The verification shall be considered successful if the demonstration or analysis confirms the specified categories of equipment utilize crew interaction or crew observation for failure detection, isolation, annunciation, and recovery.

AGREED.

4.3.2.4.3.4 Automatic functional recovery confirmation.

The RS shall indicate that a failed function has been restored following successful automatic functional recovery. The RS shall issue a caution and warning message after an unsuccessful automatic function recovery. This item shall be verified by demonstration or analysis.

AGREED.

4.3.2.4.3.5 Automatic safing confirmation.

The RS shall indicate that an unsafe condition has been made safe following a successful automatic safing action. The RS shall issue a caution and warning message following an unsuccessful automatic safing action. This item shall be verified by demonstration or analysis.

AGREED.

4.3.2.4.3.6 False alarm mitigation.

False Alarm mitigation shall be verified by review of system hardware design drawings and software code documents to ensure that false alarm mitigation techniques have been incorporated in the system design.

AGREED.

4.3.2.4.4 Pressure integrity.

Compliance with the hatch and seal pressure integrity requirement shall be verified by analysis and/or inspection. The analysis and inspection shall be based upon data provided through design documentation such as drawings. The verification shall be considered successful when analysis and/or inspection of design documentation confirms that all hatches and seals required to maintain pressurization are accessible for inspection, maintenance, or repair by crew members.

AGREED.

4.3.2.5 Docking mechanism and contact conditions.

MCS auto docking performance, for the types of vehicles specified in the Tables VIII–B through VIII–C, shall be verified by analysis and will be considered successful when the results show that the vehicle docking parameters will remain within the limits specified considering 3 sigma system dispersions and even in the presence of hardware failures (taken one at a time) in the active vehicle MCS. MCS auto docking performance for the vehicles specified in Table VIII–A will be verified based upon flight experience and/or ground simulations.

The following documents shall confirm that manual docking (either directly of via teleoperator mode), for all types of vehicles specified in Tables VIII–A through VIII–C can be performed successfully and the vehicle docking parameters will remain within the design limits specified. The documents are:

1) Requirements to the level of cosmonauts preparation in order to pilot a vehicle manually.

2) Certification that the man–in–the–loop simulator can simulate the mission conditions.

3) Certification of the crew members to perform manual dockings.

Russian vehicle docking contact force time histories shall be provided by RSC–Energia for integrated Station loads analysis. When statistically projected contact conditions are used, statistical properties of these docking contact variables shall be determined from validated simulations of the Motion Control System.

General characteristics of the Russian vehicle docking mechanism mathematical model shall be verified by comparison with 6–DOF hardware tests. Results of this test validation process shall be documented wand reviewed by Russian and U.S. specialists. In addition, a selected set of critical Russian vehicle docking contact force time histories which generate Space Station design loads shall be verified by comparison with 6–DOF hardware tests.

AGREED.

4.3.2.6 Environmental conditions.

4.3.2.6.1 On–orbit environmental conditions.

4.3.2.6.1.1 Thermal environment.

The capability of the RS to meet the thermal performance requirements specified herein shall be verified by the results of integrated thermal analysis. The analysis shall address shadowing and

radiant energy interaction between RS elements, other Space Station elements, vehicles docking with and docked to the Space Station; heating of surfaces due to thrusters plume impingement from vehicles docking and docked with the Space Station and Space Station thrusters; heat from all possible sources shall be considered (examples are electric power loads, power transmission, parasitic losses, crew metabolic loads, induced environmental, and electrochemical sources) as derived from SSP 50094. The plume impingement heating effect(s) (heating of surfaces due to thruster plume impingement from ISS thrusters and vehicle(s) docking and docked with the Space Station shall be derived in accordance with SSP 50094. The Orbiter induced thermal environments shall be derived using thermal math models defined in accordance with SSP 50094. The integrated Space Station math models shall be subject to the thermal environments defined by Tables IX and X. Analysis shall be performed considering the orbit environment profiles shown in Figures 7–A through 7–D. The verification shall be considered successful when thermal model analyses results show that the RS meets specified thermal performance when exposed to Table IX and subsequent Table X on–orbit environments.

AGREED.

4.3.2.6.1.2 Neutral atmosphere.

RS operation in the specified neutral atmosphere density environment shall be verified by analysis based on Guidance and Navigation, and Propulsion and Reboost simulations. The verification shall be considered successful when the analysis shows that the RS will meet performance requirements in the specified neutral atmosphere environments.

AGREED.

4.3.2.6.1.3 External contamination.

The verification shall be considered successful when analysis shows that the RS can perform in the specified quiescent and nonquiescent environment.

AGREED.

4.3.2.6.1.4 Electromagnetic and geomagnetic fields.

An electromagnetic effects analysis of electric field and magnetic field interaction within the RS shall be performed. The verification shall be considered successful when the analysis shows that the RS is electromagnetically compatible with the specified on–orbit electric and magnetic field environments.

AGREED.

4.3.2.6.1.5 Plasma.

An analysis shall be performed using equipment materials data and material characteristics data to verify that exposed surface materials or coatings, with resistivities greater than 3.E+09 ohms–cm2, have breakdown voltages greater than 40 volts. Exposed surface materials or coating with resistivities less than 3.E+09 ohms–cm2 shall be modeled with the plasma contactor(s) to verify compatibility. The verification shall be considered successful when the analysis shows that RS equipment design is compatible with the specified on–orbit plasma environment.

AGREED.

4.3.2.6.1.6 Ionizing radiation.

An analysis shall be performed using materials data, parts susceptibility data, and design data or existing literature from similar applications to verify that RS equipment will meet design life and

performance requirements within the specified ionizing radiation environment. The photovoltaic arrays shall have an ionizing radiation dose margin of one. Otherwise, an ionizing radiation dose design margin of two shall be verified.

AGREED.

4.3.2.6.1.7 Reserved.

4.3.2.6.1.8 Meteoroids and Orbital Debris (M/OD).

An analysis shall be performed using configuration data, predicted design life exposure limits, materials data, and M/OD penetration probabilities based on BUMPER–II or an equivalent analysis code to verify RS performance in the specified M/OD environment. The verification shall be considered successful if the analysis shows that the Space Station will meet specified performance when exposed to the M/OD environment defined herein.

AGREED.

4.3.2.6.1.9 Reserved.

4.3.2.6.1.10 Plume impingement pressures.

TBD

4.3.2.6.1.11 Flight attitude table.

An analysis of RS environment qualification data against the ISS assembly configurations and assembly data shall be performed to show that the RS has been verified for each ISS assembly configuration following its launch. The analysis shall be considered successful when the analysis shows that the RS is compatible with the specified environments.

AGREED.

4.3.2.6.1.12 Reserved.

AGREED.

4.3.3 Design and construction.

4.3.3.1 Materials, processes and parts.

4.3.3.1.1 Reserved.

4.3.3.1.2 Reserved.

4.3.3.1.3 Materials and processes.

Materials and processes shall be verified to meet the requirements as specified in SSP 50094, paragraph 4.3, by inspection of the drawing package. Verification is considered successful if all materials identified on the drawings are approved as specified in SSP 50094, paragraph 4.3.

AGREED.

4.3.3.1.4 Electrical, Electronic, and Electromechanical (EEE) parts.

The EEE part selection shall be verified by review of the EEE list and application analysis (i.e., a review of EEE parts, electrical parameters and temperature compared to maximum ratings) so as

to assure their compliance to the requirements as specified in SSP 50094, paragraphs 4.1.1.1, 4.1.1.1.1, 4.1.1.1.1.1, 4.1.1.1.1.2, and 4.1.1.3. Verification shall be considered successful when the EEE parts identified and the application analysis comply to the requirements as specified in SSP 50094.

AGREED.

4.3.3.1.5 Seal life.

Seal life shall be verified by inspection of drawings to insure acceptable operation within or on orbit replace ability. Test data may also be obtained from analysis of bulk material or o–ring specimen tests, and/or component life tests. Materials and Processes approval of the drawing constitutes verification.

AGREED.

4.3.3.1.6 Fluid and connector standards.

a. Fluids shall be verified to meet the requirements as specified in SSP 50094, paragraph 4.2.3, by inspection of applicable procurement specifications and documentation. Verification is considered successful if all fluids used for flight and called out on the drawing are procured to the requirements as specified in SSP 50094, paragraph 4.2.3.

b. TBD

AGREED.

4.3.3.1.7 Capability: Provide propellants and pressurant gases.

All propellants and pressurant gases loaded into Russian propulsion and propellant resupply systems shall meet the requirements defined in SSP 50094, section 10. Propellant and pressurant quality verification shall be performed by chemical analysis of samples before loading.

AGREED.

4.3.3.2 Electromagnetic radiation.

4.3.3.2.1 Electromagnetic Compatibility (EMC).

An integrated electromagnetic compatibility analysis of system qualification test data shall be performed. The verification shall be considered successful when the analysis shows that electromagnetic compatibility is demonstrated (including safety margins).

AGREED.

4.3.3.3 Nameplates and product marking.

The RS’s ability to provide equipment labeling for the on–orbit crew interface in accordance with SSP 50094, paragraph 6.4.7 shall be verified by inspection. The inspection shall be based upon data provided through drawings. The inspection shall be considered successful when analysis of the data shows that the RS can provide equipment labeling for the on–orbit crew interface in accordance with SSP 50094, paragraph 6.4.7.

AGREED.

4.3.3.3.1 Labeling.

The RS's ability to provide label markings standardized for format, location, and criteria in accordance with SSP 50094, paragraph 6.4.7 shall be verified by inspection. The inspection shall be based upon data provided through drawings. The inspection shall be considered successful when analysis of the data that the RS can provide label markings standardized for format, location, and criteria in accordance with SSP 50094, paragraph 6.4.7.

AGREED.

4.3.3.3.1.1 Vendor Labels.

The RS's ability to provide ORUs labeled with serial number and system code number shall be verified through inspection. The inspection shall be based upon data provided through drawings. The inspection shall be considered successful when analysis of the data shows that the RS can provide ORUs labeled with, serial number and system code number.

AGREED.

4.3.3.3.2 On–orbit labels.

The RS's ability to provide equipment labeled to support equipment identification, assist in inventory management, provide operating instructions, and support hazard identification in accordance with SSP 50094, paragraph 6.4.7 shall be verified by inspection. The inspection shall be based upon data provided through drawings. The inspection shall be considered successful when analysis of the data shows that the RS can provide equipment labeled to support equipment identification, assist in inventory management, provide operating instructions, and support hazard identification in accordance with SSP 50094, paragraph 6.4.7.

AGREED.

4.3.3.4 Workmanship.

An inspection of drawings shall be used to verify compliance with workmanship standards specified in SSP 50094, paragraph 4.3.4.6. Approval of the drawing constitutes verification.

AGREED.

4.3.3.4.1 Cleanliness.

Surface cleanliness requirements of components or assemblies during integration into habitable volumes shall be verified by inspection of the drawing notes. Cleanliness requirements of exterior surfaces shall be verified by inspection of the drawing notes. Verification is considered successful when the drawing notes call out the cleanliness level requirements.

AGREED.

4.3.3.4.2 Cleanliness of surfaces in contact with fluids.

The cleanliness level requirements for internal surfaces of subsystem, components, valves, lines, etc., which are in contact with fluids shall be verified by inspection of the drawing notes to meet the minimum cleanliness level as specified in SSP 50094, paragraph 4.2.2, for that fluid prior to servicing the subsystem, lines, etc., with the working fluid. Verification of packaging requirements as specified in SSP 50094, paragraph 4.2.2, required to maintain the cleanliness

level of the subsystem, lines, etc., until servicing with the working fluid shall be by inspection of the drawing notes. Verification is considered successful when the drawing notes call out the cleanliness level requirements.

AGREED.

4.3.3.5 Reserved.

4.3.3.6 Safety.

4.3.3.6.1 General.

4.3.3.6.1.1 Catastrophic hazards.

Verification shall be done by using methodology documented in hazard reports. A hazard analysis shall be conducted to: identify the hazards; determine their severity; identify causes, and appropriate hazard controls to be implemented in the design; determine the compliance of those controls with safety requirements; and define the methods to be used to verify those hazard controls. The verification shall be considered successful when the hazard reports documenting the results of the hazard analysis are approved by the ISS Safety Review Panel.

AGREED.

4.3.3.6.1.2 Critical hazards.

Verification shall be done by using methodology documented in hazard reports. A hazard analysis shall be conducted to: identify the hazards; determine their severity; identify causes, and appropriate hazard controls to be implemented in the design; determine the compliance of those controls with safety requirements; and define the methods to be used to verify those hazard controls. The verification shall be considered successful when the hazard reports documenting the results of the hazard analysis are approved by the ISS Safety Review Panel.

AGREED.

4.3.3.6.1.3 Design for minimum risk.

Verification shall be considered successful when fulfillment of this requirement is shown in documentation on systems.

AGREED.

4.3.3.6.1.4 Control of functions resulting in critical hazards.

4.3.3.6.1.4.1 Inadvertent operation resulting in critical hazard.

Verification shall be done by using methodology documented in hazard reports. A hazard analysis shall be conducted to: identify the hazards; determine their severity; identify causes, and appropriate hazard controls to be implemented in the design; determine the compliance of those controls with safety requirements; and define the methods to be used to verify those hazard controls. The verification shall be considered successful when the hazard reports documenting the results of the hazard analysis are approved by the ISS Safety Review Panel.

AGREED.

4.3.3.6.1.4.2 Loss of function resulting in critical hazard.

Verification shall be done by using methodology documented in hazard reports. A hazard analysis shall be conducted to: identify the hazards; determine their severity; identify causes, and

appropriate hazard controls to be implemented in the design; determine the compliance of those controls with safety requirements; and define the methods to be used to verify those hazard controls. The verification shall be considered successful when the hazard reports documenting the results of the hazard analysis are approved by the ISS Safety Review Panel.

AGREED.

4.3.3.6.1.5 Control of functions resulting in catastrophic hazards.

4.3.3.6.1.5.1 Inadvertent operation resulting in catastrophic hazard.

Verification shall be done by using methodology documented in hazard reports. A hazard analysis shall be conducted to: identify the hazards; determine their severity; identify causes, and appropriate hazard controls to be implemented in the design; determine the compliance of those controls with safety requirements; and define the methods to be used to verify those hazard controls. The verification shall be considered successful when the hazard reports documenting the results of the hazard analysis are approved by the ISS Safety Review Panel.

AGREED.

4.3.3.6.1.5.2 Loss of function resulting in catastrophic hazard.

Verification shall be done by using methodology documented in hazard reports. A hazard analysis shall be conducted to: identify the hazards; determine their severity; identify causes, and appropriate hazard controls to be implemented in the design; determine the compliance of those controls with safety requirements; and define the methods to be used to verify those hazard controls. The verification shall be considered successful when the hazard reports documenting the results of the hazard analysis are approved by the ISS Safety Review Panel.

AGREED.

4.3.3.6.1.6 Subsequent induced loads.

Verification shall be done by using methodology documented in hazard reports. A hazard analysis shall be conducted to: identify the hazards; determine their severity; identify causes, and appropriate hazard controls to be implemented in the design; determine the compliance of those controls with safety requirements; and define the methods to be used to verify those hazard controls. The verification shall be considered successful when the hazard reports documenting the results of the hazard analysis are approved by the ISS Safety Review Panel.

AGREED.

4.3.3.6.1.7 Safety interlocks.

Verification shall be done by using methodology documented in hazard reports. A hazard analysis shall be conducted to: identify the hazards; determine their severity; identify causes, and appropriate hazard controls to be implemented in the design; determine the compliance of those controls with safety requirements; and define the methods to be used to verify those hazard controls. The verification shall be considered successful when the hazard reports documenting the results of the hazard analysis are approved by the ISS Safety Review Panel.

AGREED.

4.3.3.6.1.8 Environmental compatibility.

Verification shall be considered successful when fulfillment of this requirement is shown in documentation on systems.

AGREED.

4.3.3.6.1.9 Redundant functions.

Verification shall be done by using methodology documented in hazard reports. A hazard analysis shall be conducted to: identify the hazards; determine their severity; identify causes, and appropriate hazard controls to be implemented in the design; determine the compliance of those controls with safety requirements; and define the methods to be used to verify those hazard controls. The verification shall be considered successful when the hazard reports documenting the results of the hazard analysis are approved by the ISS Safety Review Panel.

AGREED.

4.3.3.6.2 Hazard detection and safing.

4.3.3.6.2.1 Safing prior to return/resupply/refurbishment.

Verification shall be done by using methodology documented in hazard reports. A hazard analysis shall be conducted to: identify the hazards; determine their severity; identify causes, and appropriate hazard controls to be implemented in the design; determine the compliance of those controls with safety requirements; and define the methods to be used to verify those hazard controls. The verification shall be considered successful when the hazard reports documenting the results of the hazard analysis are approved by the ISS Safety Review Panel.

AGREED.

4.3.3.6.2.2 Monitors.

4.3.3.6.2.2.1 Status information.

Verification shall be done by using methodology documented in hazard reports. A hazard analysis shall be conducted to: identify the hazards; determine their severity; identify causes, and appropriate hazard controls to be implemented in the design; determine the compliance of those controls with safety requirements; and define the methods to be used to verify those hazard controls. The verification shall be considered successful when the hazard reports documenting the results of the hazard analysis are approved by the ISS Safety Review Panel.

AGREED.

4.3.3.6.2.2.2 Hazardous function operation prevention.

Verification shall be done by using methodology documented in hazard reports. A hazard analysis shall be conducted to: identify the hazards; determine their severity; identify causes, and appropriate hazard controls to be implemented in the design; determine the compliance of those controls with safety requirements; and define the methods to be used to verify those hazard controls. The verification shall be considered successful when the hazard reports documenting the results of the hazard analysis are approved by the ISS Safety Review Panel.

AGREED.

4.3.3.6.2.2.3 Loss of input or failure.

Verification shall be considered successful when fulfillment of this requirement is shown in documentation on systems.

AGREED.

4.3.3.6.2.2.4 Launch site availability.

Presently it is not planned to use the Space Shuttle for ISS RS supply. In the event that the Space Shuttle is used, verification shall be done by analysis. For RS elements transported by the Orbiter, a hazard analysis related to ground operations shall be conducted to: identify the hazards; determine their severity; identify causes, and appropriate hazard controls to be implemented in the design; determine the compliance of those controls with safety requirements; and define the methods to be used to verify those hazard controls. The results of this hazard analysis shall identify monitors that are needed to assure safety during ground operations, the locations of the needed monitors, and how the data will be transmitted to the launch site. The verification shall be considered successful when the analyses verify that necessary ground monitoring has been incorporated into the design. (Reference 4.3.3.6.13)

AGREED.

4.3.3.6.2.2.5 Flight crew availability.

Verification shall be done by using methodology documented in hazard reports. A hazard analysis shall be conducted to: identify the hazards; determine their severity; identify causes, and appropriate hazard controls to be implemented in the design; determine the compliance of those controls with safety requirements; and define the methods to be used to verify those hazard controls. The verification shall be considered successful when the hazard reports documenting the results of the hazard analysis are approved by the ISS Safety Review Panel.

AGREED.

4.3.3.6.2.3 Near real–time monitoring.

Verification shall be done by using methodology documented in hazard reports. A hazard analysis shall be conducted to: identify the hazards; determine their severity; identify causes, and appropriate hazard controls to be implemented in the design; determine the compliance of those controls with safety requirements; and define the methods to be used to verify those hazard controls. The verification shall be considered successful when the hazard reports documenting the results of the hazard analysis are approved by the ISS Safety Review Panel.

AGREED.

4.3.3.6.2.4 Real–time monitoring.

4.3.3.6.2.4.1 Maintain status of hazard controls.

Verification shall be done by using methodology documented in hazard reports. A hazard analysis shall be conducted to: identify the hazards; determine their severity; identify causes, and appropriate hazard controls to be implemented in the design; determine the compliance of those controls with safety requirements; and define the methods to be used to verify those hazard controls. The verification shall be considered successful when the hazard reports documenting the results of the hazard analysis are approved by the ISS Safety Review Panel.

AGREED.

4.3.3.6.2.4.2 Crew response time and safing procedures.

Verification shall be done by using methodology documented in hazard reports. A hazard analysis shall be conducted to: identify the hazards; determine their severity; identify causes, and appropriate hazard controls to be implemented in the design; determine the compliance of those controls with safety requirements; and define the methods to be used to verify those hazard controls. The verification shall be considered successful when the hazard reports documenting the results of the hazard analysis are approved by the ISS Safety Review Panel.

AGREED.

4.3.3.6.2.4.3 Ground monitoring.

Verification shall be done by using methodology documented in hazard reports. A hazard analysis shall be conducted to: identify the hazards; determine their severity; identify causes, and appropriate hazard controls to be implemented in the design; determine the compliance of those controls with safety requirements; and define the methods to be used to verify those hazard controls. The verification shall be considered successful when the hazard reports documenting the results of the hazard analysis are approved by the ISS Safety Review Panel.

AGREED.

4.3.3.6.3 Command and computer control of hazardous functions.

4.3.3.6.3.1 Computer control of hazardous functions.

Verification shall be considered successful when fulfillment of this requirement is shown in documentation on systems.

4.3.3.6.3.1.1 Detection and recovery.

The verification shall be performed by analysis and demonstration. The analysis of nonstandard situations and system safety shall identify the software connected to catastrophic and critically hazardous events. The software shall be complete and correct. The analysis shall show that all identified functions of the critical software exist and are being carried out as defined and that they are completed. The analysis shall show that critical software contains the appropriate means for identifying errors/failure which inform the operator of errors /failures, or that C&W devices are used for this purpose. The demonstration shall show that the mechanism for identifying a failure and announcing a failure / C&W has been built into the system and performs properly. The demonstration shall show that there is a mechanism for safe restoration of the process or event. The demonstration shall show that there are no side effects which could lead to hazardous situations and that the process/events may be interrupted under the largest number of probable conditions. The analysis shall show that either the software errors / failures are processed properly in order to prevent the consequences of the failure/error from spreading or that the system is designed so that no software errors/ occur. In the first instance, the analysis shall show that the existing error processing mechanism and the error isolation mechanism properly cover the entire range of existing software errors that may occur. The demonstration shall show that these mechanisms were designed for adequate restoration and identify and document the limitations (if they exist) of the error processing mechanism or the error avoidance devices. The verification shall be considered successful if the analyses and demonstrations show that all failures in critical software functions can be identified and that the software can be restored in time to prevent hazardous events.

AGREED.

4.3.3.6.3.1.2 Independent safing action.

The verification of independent safety activities shall be performed by analysis. The computer–controlled management system shall be analyzed in order to show that conditions for possible failures which affect safety will be detected and that the result of this detection will be an action independent of the malfunctioning component (equipment and/or software) which leads to the restoration of the functioning of the computer–controlled system and that the computer–controlled system can perform the functions assigned to it. The verification shall be considered successful if the analyses also show that failures in all functions of critical software can be detected and restored in the time necessary to prevent the hazardous situation.

AGREED.

4.3.3.6.4 Hazardous materials.

4.3.3.6.4.1 Hazardous fluid containment failure tolerance.

a. When redundant sealed containers are used to contain the hazardous fluid.

Verification shall be done by using methodology documented in hazard reports. A hazard analysis shall be conducted to: identify the hazards; determine their severity; identify causes, and appropriate hazard controls to be implemented in the design; determine the compliance of those controls with safety requirements; and define the methods to be used to verify those hazard controls. The verification shall be considered successful when the hazard reports documenting the results of the hazard analysis are approved by the ISS Safety Review Panel.

b. When pressure vessels are used to contain the hazardous fluid:

Verification shall be considered successful when fulfillment of this requirement is shown in documentation on systems.

AGREED.

4.3.3.6.5 Pyrotechnics for RS application.

Verification shall be considered successful when fulfillment of this requirement is shown in documentation on systems.

AGREED.

4.3.3.6.6 Radiation.

4.3.3.6.6.1 Reserved.

4.3.3.6.6.2 Nonionizing radiation.

Verification shall be done by using methodology documented in hazard reports. A hazard analysis shall be conducted to: identify the hazards; determine their severity; identify causes, and appropriate hazard controls to be implemented in the design; determine the compliance of those controls with safety requirements; and define the methods to be used to verify those hazard controls. The verification shall be considered successful when the hazard reports documenting the results of the hazard analysis are approved by the ISS Safety Review Panel.

AGREED.

4.3.3.6.6.3 Spacesuit electric field radiation.

The RS electric field emissions shall be verified to be compatible with the NASA EVA suit by analysis. The analysis shall be based on engineering analysis, or if not feasible, test of RS electric field emissions. The analysis shall be considered successful when it is shown that the electric field emissions of the RS do not exceed the NASA EVA suit limits specified in figure 9–A.

AGREED.

4.3.3.6.6.4 Spacesuit magnetic field radiation.

The RS magnetic field radiation shall be verified to be compatible with the NASA EVA suit by analysis. The analysis shall be based on engineering analysis, or if not feasible, test of RS magnetic field radiation. The analysis shall be considered successful when it is shown that the RS magnetic field radiation levels do not exceed 63 gauss.

AGREED.

4.3.3.6.7 Optics and lasers.

4.3.3.6.7.1 Lasers.

Verification shall be considered successful when fulfillment of this requirement is shown in documentation on systems.

AGREED.

4.3.3.6.7.2 Optical requirements.

4.3.3.6.7.2.1 Optical instruments.

Verification shall be considered successful when fulfillment of this requirement is shown in documentation on systems.

AGREED.

4.3.3.6.7.2.2 Personnel protection.

Verification shall be considered successful when fulfillment of this requirement is shown in documentation on systems.

AGREED.

4.3.3.6.7.2.3 Direct viewing optical systems.

Verification shall be considered successful when fulfillment of this requirement is shown in documentation on systems.

AGREED.

4.3.3.6.8 Electrical safety.

4.3.3.6.8.1 Electrical power circuit overloads.

4.3.3.6.8.1.1 Circuit overload protection.

Verification shall be considered successful when fulfillment of this requirement is shown in documentation on systems.

AGREED.

4.3.3.6.8.1.2 Protective device sizing.

Verification shall be considered successful when fulfillment of this requirement is shown in documentation on systems.

AGREED.

4.3.3.6.8.1.3 Bent pin or conductive contamination.

Verification shall be considered successful when fulfillment of this requirement shown in documentation on systems.

AGREED.

4.3.3.6.8.2 Crew protection for electrical shock.

Verification shall be done by using methodology documented in hazard reports. A hazard analysis shall be conducted to: identify the hazards; determine their severity; identify causes, and appropriate hazard controls to be implemented in the design; determine the compliance of those controls with safety requirements; and define the methods to be used to verify those hazard controls. The verification shall be considered successful when the hazard reports documenting the results of the hazard analysis are approved by the ISS Safety Review Panel.

AGREED.

4.3.3.6.8.2.1 EVA crew protection for electric shock.

Protection of the EVA crew from electric shock shall be verified by analysis. The analysis shall be based upon the documentation defining the electrical schematic of RS EVA electrical circuits. The analysis shall be considered successful when it is shown that at least two verifiable inhibits are provided to verify power isolation.

AGREED.

4.3.3.6.8.3 Reapplication of power.

Verification shall be considered successful when fulfillment of this requirement is shown in documentation on systems.

AGREED.

4.3.3.6.8.4 Batteries.

Verification shall be considered successful when fulfillment of this requirement is shown in documentation on systems.

AGREED.

4.3.3.6.9 Liquid propellant propulsion system.

4.3.3.6.9.1 Inadvertent engine firings.

Verification shall be done by using methodology documented in hazard reports. A hazard analysis shall be conducted to: identify the hazards; determine their severity; identify causes, and

appropriate hazard controls to be implemented in the design; determine the compliance of those controls with safety requirements; and define the methods to be used to verify those hazard controls. The verification shall be considered successful when the hazard reports documenting the results of the hazard analysis are approved by the ISS Safety Review Panel.

AGREED.

4.3.3.6.9.1.1 Propellant flow control devices.

Verification shall be done by using methodology documented in hazard reports. A hazard analysis shall be conducted to: identify the hazards; determine their severity; identify causes, and appropriate hazard controls to be implemented in the design; determine the compliance of those controls with safety requirements; and define the methods to be used to verify those hazard controls. The verification shall be considered successful when the hazard reports documenting the results of the hazard analysis are approved by the ISS Safety Review Panel.

AGREED.

4.3.3.6.9.1.1.1 Thruster valves.

Verification shall be done by using methodology documented in hazard reports. A hazard analysis shall be conducted to: identify the hazards; determine their severity; identify causes, and appropriate hazard controls to be implemented in the design; determine the compliance of those controls with safety requirements; and define the methods to be used to verify those hazard controls. The verification shall be considered successful when the hazard reports documenting the results of the hazard analysis are approved by the ISS Safety Review Panel.

AGREED.

4.3.3.6.9.1.1.2 Operations.

Verification shall be done by using methodology documented in hazard reports. A hazard analysis shall be conducted to: identify the hazards; determine their severity; identify causes, and appropriate hazard controls to be implemented in the design; determine the compliance of those controls with safety requirements; and define the methods to be used to verify those hazard controls. The verification shall be considered successful when the hazard reports documenting the results of the hazard analysis are approved by the ISS Safety Review Panel.

AGREED.

4.3.3.6.9.1.2 Electrical inhibits.

Verification shall be done by using methodology documented in hazard reports. A hazard analysis shall be conducted to: identify the hazards; determine their severity; identify causes, and appropriate hazard controls to be implemented in the design; determine the compliance of those controls with safety requirements; and define the methods to be used to verify those hazard controls. The verification shall be considered successful when the hazard reports documenting the results of the hazard analysis are approved by the ISS Safety Review Panel.

AGREED.

4.3.3.6.9.1.3 Monitoring of electrical inhibits to prevent catastrophic thruster firings.

Verification shall be done by using methodology documented in hazard reports. A hazard analysis shall be conducted to: identify the hazards; determine their severity; identify causes, and

appropriate hazard controls to be implemented in the design; determine the compliance of those controls with safety requirements; and define the methods to be used to verify those hazard controls. The verification shall be considered successful when the hazard reports documenting the results of the hazard analysis are approved by the ISS Safety Review Panel.

AGREED.

4.3.3.6.9.2 Propellant overheating.

Verification shall be considered successful when fulfillment of this requirement is shown in documentation on systems.

AGREED.

4.3.3.6.9.3 Propellant leakage.

Verification shall be considered successful when fulfillment of this requirement is shown in documentation on systems.

AGREED.

4.3.3.6.9.4 Reserved.

4.3.3.6.9.5 Plume impingement.

An analysis shall be conducted to define the hazardous effects due to the contamination environment caused by the exhaust plume generated by RS thruster firings that are necessary to maintain attitude control of ISS. The verification shall be considered successful when this environment will not cause hazardous effects to the Orbiter or other servicing vehicle while these vehicles are conducting proximity or docked operations with the ISS.

AGREED.

4.3.3.6.9.6 Hazardous venting.

Verification shall be considered successful when fulfillment of this requirement is shown in documentation on systems.

AGREED.

4.3.3.6.9.7 Monitoring propulsion system status.

Verification shall be considered successful when fulfillment of this requirement is shown in documentation on systems.

AGREED.

4.3.3.6.9.8 The RS motion control system.

Verification shall be done by analysis. Analysis must be conducted using design drawings, blue prints, work models, and calculation results in order to guarantee that under nominal work conditions, dynamic operations (attitude control, reboost, etc.), and failure loads structural limitations will not be exceeded.

AGREED.

4.3.3.6.10 Fire protection.

4.3.3.6.10.1 Manual activation.

This requirement shall be verified by analysis. Analysis of drawings shall be done to assure that a crewmember has the capability to notify other crewmembers of a fire event within 1 minute. The verification shall be considered successful when analysis shows that a crewmember is able to notify other crewmembers of a fire event within 1 minute after detection.

AGREED.

4.3.3.6.10.2 Isolation.

This requirement shall be verified by analysis. Analysis shall be conducted to evaluate the effects of the removal of power to a location, in response to the detection of a fire event. The verification shall be considered successful when the analysis shows the isolation of the fire event will not cause a loss of an RS functional capability which would lead to a catastrophic event.

AGREED.

4.3.3.6.10.3 Suppression.

This requirement shall be verified by analysis. An analysis shall be performed to determine which locations contain a potential fire source. Analysis of engineering drawings, and documentation shall determine the capability to apply fire suppressant for the identified locations. The verification shall be considered successful when:

a. The analysis show that the fire suppression capability exists in the defined locations when station is tended; and

b. Material control and no O2 leakage/buildup potential will prevent a fire from propagating during untended operations.

AGREED.

4.3.3.6.10.4 Suppressant.

4.3.3.6.10.4.1 Suppressant material.

Verification shall be considered successful when fulfillment of this requirement is shown in documentation on systems.

AGREED.

4.3.3.6.10.4.2 Toxicity level.

Verification shall be considered successful when fulfillment of this requirement is shown in documentation on systems.

AGREED.

4.3.3.6.10.5 Contamination.

Verification shall be considered successful when fulfillment of this requirement is shown in documentation on systems.

AGREED.

4.3.3.6.10.6 Portable equipment.

4.3.3.6.10.6.1 Proximity to entrance.

Verification shall be by analysis and inspection. An analysis of design and an inspection of pressurized volumes shall be conducted to determine the location of PFEs and PBAs Verification shall be considered successful when the analysis and inspection verify that 1 PBA and 1 PFE is located in elements less than or equal to 24 feet in length.

AGREED.

4.3.3.6.10.6.2 Location within element.

Verification shall be by analysis and inspection. An analysis of design and an inspection of pressurized volumes shall be conducted to determine the location of PFEs and PBAs Verification shall be considered successful when the analysis and inspection verify that in an element greater than 24 feet in length, a set of PBAs and PFEs is located within 12 feet of each end of the element.

AGREED.

4.3.3.6.10.6.3 Set co–location.

Verification shall be by inspection. A drawing inspection shall be performed to determine the proximity of the PBAs and PFEs from each other. Verification shall be considered successful when an inspection shows that 1 PBA, is located within 3 feet from 1 PFE.

AGREED.

4.3.3.6.11 Constraints.

4.3.3.6.11.1 Pressurized volume depressurization and repressurization tolerance.

4.3.3.6.11.1.1 Hazards during depressurization.

Verification for this requirement shall be as specified in paragraph 4.3.3.6.1.1.

4.3.3.6.11.2 Emergency egress.

Verification shall be by analysis. An analysis shall be performed using data from drawings, operational procedures and, experience from previous flights. During the analysis the main and reserve crew transition routes must be determined which are used in emergency situations for translation from one pressurized compartment to another. Emergency translation capabilities must include the ability of the crew to isolate itself from the damaged pressurized volume, among the tasks included is the capability to close the hatch. Verification is successful if in the analysis the emergency translation routes are determined and if it is determined that a crewmember is capable of effecting translation to an undamaged pressurized volume and close the hatch within 3 minutes.

AGREED.

4.3.3.6.11.3 Translation entry/exit paths.

Verification shall be considered successful when fulfillment of this requirement is shown in documentation on systems.

AGREED.

4.3.3.6.11.4 Component hazardous energy provision.

Verification shall be done by using methodology documented in hazard reports. A hazard analysis shall be conducted to: identify the hazards; determine their severity; identify causes, and appropriate hazard controls to be implemented in the design; determine the compliance of those controls with safety requirements; and define the methods to be used to verify those hazard controls. The verification shall be considered successful when the hazard reports documenting the results of the hazard analysis are approved by the ISS Safety Review Panel.

AGREED.

4.3.3.6.11.5 Hatch opening.

Verification shall be considered successful when fulfillment of this requirement is shown in documentation on systems.

AGREED.

4.3.3.6.11.6 Hatch operations.

Verification shall be considered successful when fulfillment of this requirement is shown in documentation on systems.

AGREED.

4.3.3.6.11.7 Pins or detachable parts.

Verification shall be considered successful when fulfillment of this requirement is shown in documentation on systems.

AGREED.

4.3.3.6.11.8 Single crewmember entry/exit.

Verification shall be considered successful when fulfillment of this requirement is shown in documentation on systems.

AGREED.

4.3.3.6.11.9 Reserved.

4.3.3.6.11.10 Equipment clearance for entrapment hazard.

Verification shall be done by using methodology documented in hazard reports. A hazard analysis shall be conducted to: identify the hazards; determine their severity; identify causes, and appropriate hazard controls to be implemented in the design; determine the compliance of those controls with safety requirements; and define the methods to be used to verify those hazard controls. The verification shall be considered successful when the hazard reports documenting the results of the hazard analysis are approved by the ISS Safety Review Panel.

AGREED.

4.3.3.6.11.11 Light fixture.

Verification shall be considered successful when fulfillment of this requirement is shown in documentation on systems.

AGREED.

4.3.3.6.12 Human factors.

4.3.3.6.12.1 Internal volume touch temperature.

4.3.3.6.12.1.1 Continuous contact – high temperatures.

Verification shall be by analysis and inspection. An analysis shall be performed using data from drawings, thermal analyses and tests, and operational procedures to identify hardware whose external temperatures exceed 104 degrees F (40 degrees C) and have the potential for crewmember contact and identify where required insulation and protective equipment are needed. A drawing inspection shall show that required protective equipment is in place. Inspection shall show that insulation and guarding features are properly incorporated. The results of all touch temperature verification (4.3.3.6.12.1.1, 4.3.3.6.12.1.2, and 4.3.3.6.12.1.3) will be documented in a final report. Verification shall be considered successful when analysis identifies the hardware that pose a touch temperature hazard to the crew and inspection shows that necessary component insulation, and/or protective hardware is properly installed or in place to prevent crewmember contact.

AGREED.

4.3.3.6.12.1.2 Incidental or momentary contact – high temperature.

a. Verification shall be by analysis and inspection. An analysis shall be performed using data from drawings, thermal analyses and tests, and operational procedures to identify hardware whose external temperatures are below 113 degrees F (45 degrees C) or above 104 degrees F (40 degrees C) and have the potential for incidental or momentary crewmember contact. This analysis shall also identify where warning labels are required. A drawing inspection shall show that the required labels are in place. The results of all touch temperature verification (4.3.3.6.12.1.1, 4.3.3.6.12.1.2, and 4.3.3.6.12.1.3) will be documented in a final report. Verification shall be considered successful when the analysis identifies potential hazardous temperatures and inspection shows that the warning labels are in place.

b. Verification shall be by analysis and inspection. An analysis shall be performed using data from drawings, thermal analyses and tests, and operational procedures to identify hardware whose external temperatures are above 113 degrees F (45 degrees C) and have the potential for crewmember contact. This analysis shall also identify where protective equipment is necessary. A drawing inspection shall show that the required protective equipment is in place. The results of all touch temperature verification (4.3.3.6.12.1.1, 4.3.3.6.12.1.2, and 4.3.3.6.12.1.3) will be documented in a final report. Verification shall be considered successful when the analysis identifies potential hazardous temperatures and inspection shows that protective equipment is in place.

AGREED.

4.3.3.6.12.1.3 Internal volume low touch temperature.

Verification shall be by analysis and inspection. An analysis shall be performed using data from drawings, thermal analyses and tests, and operational procedures to identify hardware whose external temperatures are below 41 degrees F (5 degrees C) and have the potential for crewmember contact. Analysis shall identify where protective equipment is necessary. A drawing inspection shall show that the required protective equipment is in place. The results of all touch temperature verification (4.3.3.6.12.1.1, 4.3.3.6.12.1.2 and 4.3.3.6.12.1.3) will be documented in a final report. Verification shall be considered successful when the analysis identifies potential hazardous temperatures and inspection shows that the protective equipment is in place.

AGREED.

4.3.3.6.12.2 External touch temperature.

Verification of touch temperature shall be by analysis.

a. For touch temperatures of crew interfaces that are subject to incidental contact, the analysis shall be based upon drawing data, thermal analyses and tests, and operational procedures to identify hardware that has potential for incidental contact by EVA crewmembers. The analysis shall be considered successful if the temperature extremes of the crew interface fall within the range of –178.6 to +235.4 degrees F (–117 to +113 degrees C).

b. For touch temperatures of crew interfaces that are subject to unlimited contact by the crew, the analysis shall be based upon drawing data, thermal analyses and tests, and the data of Table XIII identifying designated EVA crew interfaces. The analysis shall be considered successful if the temperature extremes of the crew interface fall within the range of –45.4 to + 145.4 degrees F (–43 to +63 degrees C).

AGREED.

4.3.3.6.12.3 External edge, corner, and protrusion radii.

a. Verification shall be by analysis and inspection. An analysis shall be performed using data from drawings, integration documentation, and operational procedures to identify hardware edges and corners requiring rounding, the use of guards, or covers due to location in crewmember translation paths and maintenance worksites. A drawing inspection shall show that the required edge and corner rounding, deburring, or cover installation has been accomplished or proper guards are in place. Verification shall be considered successful when analysis and inspection show that all required edges or corners have been properly machined, covered, or guarded.

b. Verification shall be by analysis and inspection. An analysis shall be performed using data from drawings, integration documentation, and operational procedures to identify edges and corners requiring rounding, the use of guards, or covers due to location in crewmember translation paths and maintenance worksites. A drawing inspection shall show that the required edge and corner rounding, deburring, or cover installation has been accomplished or proper guards are in place. Verification shall be considered successful when analysis and inspection show that all required edges or corners have been properly machined, covered, or guarded.

AGREED.

4.3.3.6.12.4 IVA internal corner and edge protection.

Verification shall be by inspection. A drawing and integration document inspection shall show that the required edge and corner chamfering or rounding has been accomplished or proper guards are in place. Verification shall be considered successful when the inspection shows that all required edges and corners have been properly chamfered, rounded or guarded.

AGREED.

4.3.3.6.12.5 Reserved.

4.3.3.6.12.6 Latches.

4.3.3.6.12.6.1 Design.

Verification shall be by inspection. A drawing and integration document inspection shall show that the required cover installation has been accomplished or proper guards are in place on

latches located in crewmember translation paths and maintenance work sites. Verification shall be considered successful when inspection shows that all latches and similar devices have been properly covered, or guarded.

AGREED.

4.3.3.6.12.6.2 Protective covers or guards.

Verification shall be by inspection. A drawing and integration document inspection shall show that the required cover installation has been accomplished or proper guards are in place where required at locations in crewmember translation paths and maintenance work sites. Verification shall be considered successful when inspection shows that all latches have been properly covered, or guarded.

AGREED.

4.3.3.6.12.7 Screws and bolts.

Verification shall be by inspection. A drawing and integration document inspection shall identify screws and bolts that exceed the length specified in 3.3.6.12.7 and shall show that the required cover installation has been accomplished or proper guards are in place where required at locations in crewmember translation paths and maintenance work sites. Verification shall be considered successful when inspection shows that screws and bolts that exceed the specified length have been properly covered, or guarded.

AGREED.

4.3.3.6.12.8 Safety critical fasteners.

Verification shall be by inspection. A drawing and integration document inspection shall show that the required safety critical fastener installation has been accomplished or proper guards are in place where required at locations in crewmember translation paths and maintenance worksites. Verification shall be considered successful when inspection shows that all safety critical fasteners have been properly covered, or guarded and will not back out.

AGREED.

4.3.3.6.12.9 Levers, cranks, hooks, and controls.

Verification shall be by inspection. A drawing and integration document inspection shall show that cover installation has been accomplished or that proper guards are in place on all levers, cranks, hooks and controls at locations in crewmember translation paths and maintenance work sites. Verification shall be considered successful when inspection shows that all levers, cranks, hooks and controls have been properly covered, or guarded.

AGREED.

4.3.3.6.12.10 Burrs.

Verification shall be by inspection. A drawing and integration document inspection shall identify all potential areas where deburring is required at locations in crewmember translation paths and maintenance worksites. Verification shall be considered successful when inspection shows that all edges have been properly deburred.

AGREED.

4.3.3.6.12.11 Reserved.

4.3.3.6.12.12 Protrusions.

Verification shall be by analysis and inspection. An analysis shall be performed using data from drawings and integration documentation to identify hardware that have protrusions in the crew translation paths. Verification shall be considered successful when analysis and inspection shows that there are not protrusions into the 1000 mm horizontal envelope of the primary and secondary crew translation path, except for the translation aids identified in Table XIII.

AGREED.

4.3.3.6.12.13 Pinch points.

Verification shall be by analysis and inspection. An analysis shall be performed using data from drawings, integration documentation, and operational procedures to identify hardware pinch points and the required use of guards or covers due to location in crewmembers translation paths and maintenance worksites. A drawing inspection shall show that the required cover installation has been accomplished or proper guards are in place. Verification shall be considered successful when inspection shows that all potential pinch points have been properly covered or guarded.

AGREED.

4.3.3.6.12.14 Emergency ingress for a non–impaired crew member.

Verification shall be by analysis. An analysis shall be performed using data from documentation, past flight experience and demonstrations. Verification shall be considered successful when the analysis shows that a non–impaired EVA crew member can reenter the Space Station within 30 minutes.

AGREED.

4.3.3.6.12.15 Flex hoses, lines, and cables.

Verification shall be by inspection. A drawing and integration document inspection shall show that all flex hoses, lines and cables are properly restrained or otherwise captured. Verification shall be considered successful when inspection shows that all flex hoses, lines and cables are properly restrained.

AGREED.

4.3.3.6.12.16 Translation routes and established worksites.

4.3.3.6.12.16.1 Primary translation routes and established worksites.

a. An analysis shall be performed using data from drawings and integration documentation to identify hardware external to the primary translation routes and established worksites that has the potential to harm an EVA crewmember during planned and identified planned contingency EVAs. Verification shall be considered successful when analysis shows that the primary translation routes, and established worksites identified and planned do not pose a risk to EVA crew.

b. An analysis shall be performed to verify that equipment exposed to the EVA crew is not sensitive to EVA loads. Verification shall be considered successful when the equipment is properly designed to withstand EVA loads up to 50 kg (125 lbs).

AGREED.

4.3.3.6.12.16.2 Secondary translation routes and established worksites.

An inspection shall verify that proper markings have been affixed to the hardware identified as posing a hazard to the EVA crew, as identified in the hazard analysis. Verification shall be considered successful when the inspection shows that equipment identified as posing a risk to the EVA crew has the proper markings and labels affixed.

AGREED.

4.3.3.6.12.16.3 EVA crewmember contact isolation.

An analysis shall be performed using data from drawings and integration documentation to verify that equipment which cannot be labeled and which poses a hazard to the EVA crewmember during planned and identified planned contingency EVAs has been isolated from the primary and secondary translation paths. Verification shall be considered successful when all equipment has been isolated from EVA crewmember contact.

AGREED.

4.3.3.6.12.17 Moving or rotating equipment.

An analysis shall be performed using data from drawings, operational procedures, and integration documentation to identify equipment that is designed to rotate or move, operations that require EVA crewmembers to be in the area of the equipment, scenarios involving direct interface between EVA crewmembers and the equipment, and controls to prevent unwanted equipment movement. Analysis shall be performed to verify that EVA crew is not required to operate or translate near hazardous moving equipment. Verification shall be considered successful when the EVA crewmembers do not operate near moving or rotating equipment.

AGREED.

4.3.3.6.13 Launch vehicle transport – Space Shuttle launch.

The majority of equipment proposed for delivery to the ISS RS and transported from it has already been used in space programs of the Mir station and other objects, developed in accordance with standard documents of the Russian space branch and successfully transported by the Russian vehicles. Presently it is not planned to use the Space Shuttle for ISS RS supply. In the event that the Space Shuttle is used, the following verifications will be used:

a. To confirm the Russian equipment safety RSC Energia presents the findings approved by the program director.

b. For the equipment functioning at ISS RS and used for the first time RSC Energia presents the findings containing medical and technical characteristics.

c. In addition, hazard reports should be developed to address the requirements in this section. The hazard reports will address the unique interfaces and hazards existing between the RS hardware and the Space Shuttle during delivery to the ISS.

AGREED.

4.3.3.6.13.1 Space Shuttle services.

4.3.3.6.13.1.1 Fault tolerance/safety margins.

Verification shall be by analysis. An analysis shall be performed to determine the effect on hardware that uses Space Shuttle interfaces and services if those Shuttle interfaces and services

could not be provided in the event of Shuttle contingency operations. Verification shall be considered successful when analysis shows that hazard potentials without ground or flight Space Shuttle Program services are within the established safety margins and that fault tolerances are maintained.

AGREED.

4.3.3.6.13.1.2 Termination of services due to Orbiter emergency conditions.

An analysis shall be performed to assess the impact on RS hardware if during Orbiter emergency conditions Orbiter services were terminated. The success criteria are that the RS hardware can achieve the required safe condition within the time limits specified.

AGREED.

4.3.3.6.13.2 Critical Orbiter services.

A hazard analysis shall be performed to assess the interface between the Orbiter and the RS hardware when the RS hardware uses Orbiter services (Orbiter services are power, data and thermal) to determine failure tolerance of the integrated system. NASA document JSC 16979, which specifies the fault tolerance of the Orbiter provided services, can be used when conducting the RS hardware hazard analysis. The success criteria are when the failure tolerance of the integrated Orbiter/RS hardware is consistent with the hazard potential.

AGREED.

4.3.3.6.13.3 Inadvertent deployment, separation, and jettison functions.

A hazard analysis shall be performed to identify RS components that if inadvertently deployed while in the Orbiter payload bay would collide with the Orbiter or would not withstand subsequent induced loads. Analysis shall determine whether those items which could collide with the Orbiter if inadvertently deployed or those are items that are unable to withstand subsequent loads will implement design features to prevent the inadvertent deployment. The success criteria are that the RS hardware has one or two failure tolerant design features consistent with the hazard level to prevent inadvertent deployment.

AGREED.

4.3.3.6.13.4 Planned deployment/extension functions.

4.3.3.6.13.4.1 Violation of Orbiter payload door envelope.

A hazard analysis shall be performed to identify components of the RS or any RS orbital support equipment (SO) that violates the payload bay door envelope during deployment/assembly. The success criteria are that analysis shall identify independent primary and backup methods for separating the deployed/extended RS component from the Orbiter to allow payload bay door closure.

AGREED.

4.3.3.6.13.4.2 Method of fault tolerance.

An analysis shall be performed to assure that the door closure prevention hazard control methods are two–fault tolerant. The success criteria are when the analysis shows that the combination of the primary and backup method is two fault tolerant.

AGREED.

4.3.3.6.13.5 Contingency return and rapid safing.

Contingence return and rapid safing shall be verified by analysis.

An analysis shall be performed, using methodology documented in hazard reports, to verify that the RS has controls in place to support Orbiter Contingency return within 1 hour 35 minutes.

AGREED.

The verification shall be considered successful when hazard analysis reports, which document the results of the hazard analysis, prove that the RS cargo element can be safed for Orbiter emergency returns within the specified time constraints.

4.3.3.6.13.6 Flammable atmosphere.

Verification shall be done by using methodology documented in hazard reports. A hazard analysis shall be conducted to: identify the hazards; determine their severity; identify causes, and appropriate hazard controls to be implemented in the design; determine the compliance of those controls with safety requirements; and define the methods to be used to verify those hazard controls. The verification shall be considered successful when the hazard reports documenting the results of the hazard analysis are approved by the ISS Safety Review Panel.

AGREED.

4.3.3.6.13.6.1 Reserved.

4.3.3.6.13.6.2 Electrical ignition sources.

Verification shall be by analysis. An analysis shall be performed to identify electrical sources for RS hardware that are powered while in the Orbiter payload bay. Verification shall be considered successful when design features are incorporated to preclude electrical ignition sources from being exposed.

AGREED.

4.3.3.6.13.6.3 Surface temperatures.

Verification shall be by analysis. A thermal analysis shall be performed to determine worst case temperatures expected during Orbiter deorbit. Verification shall be considered successful when analysis shows that normal RS functions will not create surface temperatures in excess of 352 degrees F.

AGREED.

4.3.3.6.13.6.4 Conductive surfaces.

Verification shall be by analysis. An analysis shall be performed to verify compliance with electrostatic bonding requirements as specified in SSP 50094, paragraph 3.4. Verification shall be considered successful when analysis shows that conductive surfaces are bonded properly.

AGREED.

4.3.3.6.13.7 Allowable RF radiation levels.

Verification shall be by analysis. The analysis or test shall be performed to determine RS radiation levels that might impinge on the Orbiter. Verification shall be considered successful

when the analysis shows that the RS radiation levels exceeding the allowable limits as specified in Figure 9 have the three required independent inhibits.

AGREED.

4.3.3.6.13.8 Lightning protection.

Verification shall be performed by analysis. An analysis shall be performed to identify the RS electrical circuits for which circuit upset could result in a catastrophic hazard to the STS. Verification shall be considered successful when the analysis show that RS electrical circuits which are sensitive to electromagnetic fields and are subject to circuit upset which could result in a catastrophic hazard have the necessary hardening to control the hazard.

AGREED.

4.3.3.6.13.9 Orbiter vent/dump provisions.

4.3.3.6.13.9.1 Release or ejection of hazardous materials.

An analysis shall be performed to identify those RS materials that are hazardous. The success criteria are that the RS incorporates features to contain hazardous materials and prevent them from being released or ejected.

AGREED.

4.3.3.6.13.9.2 Fluid system containment.

Verification shall be by analysis. An analysis shall be performed to show that provisions are provided in the design of hazardous fluid systems to contain the fluids unless the use of the Orbiter vent/dump provisions have been negotiated with the Space Shuttle Program Office. Verification shall be considered successful if the analysis shows that hazardous fluids are contained or the use of the Orbiter vent/dump provisions has been negotiated with the NSTS Program Office.

AGREED.

4.3.3.6.13.10 Sealed compartments.

An analysis shall be performed on components located in the cargo bay. The analysis will compare the maximum rate of pressure change to which the sealed containers on the RS located in the Orbiter cargo bay will be exposed during ascent and descent to the capability of these containers to tolerate the differential pressure without failing. The success criteria are when the sealed containers tolerate the pressure changes without resulting in a hazard.

AGREED.

4.3.3.6.14 Ground interfaces and services – Space Shuttle launch.

The majority of equipment proposed for delivery to the ISS RS and transported from it has already been used in space programs of the Mir station and other objects, developed in accordance with standard documents of the Russian space branch and successfully transported by the Russian vehicles. Presently it is not planned to use the Space Shuttle for ISS RS supply. In the event that the Space Shuttle is used, the following verifications will be used for the ground processing with the Space Shuttle.

a. To confirm the Russian equipment safety RSC Energia presents the findings approved by the program director.

b. In addition, hazard reports should be developed to address the requirements in this section. The hazard reports will address the unique interfaces and hazards existing between the RS hardware and the Space Shuttle during ground operations.

An analysis shall be performed to identify flight equipment or hardware that may require removal and/or replacement during ground operations and the accessibility associated with these operations. The criteria for success are when the analysis, demonstration and inspection show that accessibility is sufficient for ground crew access without creating a hazard.

AGREED.

4.3.3.6.14.1 Moving parts.

An analysis shall be performed to verify the moving parts have been provided with guards or protective devices during ground operations. Verification shall be considered successful when inspection shows the are protective features have been incorporated and are adequate to prevent personnel injury or equipment damage.

AGREED.

4.3.3.6.14.2 Equipment requiring adjustment.

An inspection of drawings shall be conducted to verify that equipment requiring adjustment during ground operations has external adjustment provisions and electrical shock protection. Verification shall be considered successful when the inspection shows that equipment requiring adjustment has these features in place.

AGREED.

4.3.3.6.14.3 Ignition of adjacent materials.

An analysis shall be performed to verify that electrical equipment on flight hardware that are powered during ground operations shall not cause ignition of adjacent materials. Verification shall be considered successful when analysis proves that ignition of adjacent material will not occur.

AGREED.

4.3.3.6.14.4 Accidental contact with electrical equipment.

An inspection shall be conducted to show that protective features are installed on flight equipment or hardware that is powered during ground operations to prevent electrical shock to ground crew. Verification shall be considered successful when these protective features are called out on the drawings.

AGREED.

4.3.3.6.15 Ground interfaces and services – Russian launch vehicle.

Ground safety verification shall be implemented in accordance with Russian standards.

AGREED.

4.3.3.6.16 Ground support equipment safety requirements for SS launch of RS hardware.

Verification of safety of Russian ground support equipment used at Space Shuttle launch site shall be in accordance with SSP 50146, Appendix A.

AGREED.

4.3.3.7 Human engineering.

The RS's ability to provide hardware and software, with a crew interface, designed in accordance with the general human engineering requirements referenced throughout 3.3.7 Human Engineering and meet the specific applicable requirements as specified SSP 50094, paragraphs 6.1 and 6.2 as referenced below shall be verified by inspection. The inspection shall be based upon data collected from verification of the requirements as specified in section 3.3.7. The inspection shall be considered successful when the analysis shows that RS can provide hardware and software, with a crew interface, designed in accordance with the general human engineering requirements referenced throughout 3.3.7 Human Engineering and meet the specific applicable requirements as specified in SSP 50094, paragraphs 6.1 and 6.2.

AGREED.

4.3.3.7.1 Anthropometric requirements.

a. The RS's ability to provide hardware, except external systems, that accommodates anthropometric size in accordance with SSP 50094, paragraph 6.1 shall be verified by inspection, or analysis, or demonstration. The inspection shall be based upon data collected from reviewing drawings and hardware specifications. The analysis shall be performed using anthropometric simulations and operational procedures. The demonstration shall be based upon data collected during hardware testing and implementation of human factors test plans or data supplied from flight experience where applicable. The inspection, or analysis, or demonstration shall be considered successful when the analysis shows that the RS can provide hardware, except external systems, that accommodates anthropometric size measurements in accordance with SSP 50094, paragraph 6.1.

b. Workstations sizing to meet the functional reach limits for the design population in accordance with SSP 50094, paragraph 6.1 shall be verified by inspection, or analysis, or demonstration. The inspection shall be based upon data collected from the review of workstation drawings and specifications. The analysis shall be performed using anthropometric simulations and operational procedures. The demonstration shall be based upon data collected during hardware testing and implementation of human factors test plans or data supplied from flight experience where applicable. The inspection, or analysis, or demonstration shall be considered successful when analysis of the data shows that the RS can provide workstations sized to meet the functional reach limits for the population in accordance with SSP 50094, paragraph 6.1.

AGREED.

4.3.3.7.2 External task location requirements.

The external task location requirements shall be verified by analysis. The analysis shall be based upon documentation defining EVA tasks and element verification data. The analysis shall be considered successful when the data shows for a dedicated worksites that the tasks are located per Figure 11. The visual task location requirements shall be verified by analysis. The analysis shall be based upon documentation defining EVA tasks and element inspection and verification data. The analysis shall be considered successful when the data shows that the equipment,

controls, displays, and markings required to perform EVA tasks are located within the field of view defined in the figure.

AGREED.

4.3.3.7.3 Strength requirements.

4.3.3.7.3.1 Normal operations.

The RS's ability to provide components of RS hardware that will have a crew interface under normal operations that accommodate strength limitations in accordance with SSP 50094, paragraph 6.2 shall be verified by analysis, or inspection, or demonstration. The inspection shall be based upon data collected from review of hardware drawings and specifications. The analysis shall be performed using anthropometric simulations and operational procedures. The demonstration shall be based upon data collected during hardware testing and implementation of human factors test plans or data supplied from flight experience where applicable. The inspection or analysis, or, demonstration shall be considered successful when analysis of the data shows that the RS can provide components of RS hardware that will have a crew interface under normal operations that accommodate strength limitations in accordance with SSP 50094, paragraph 6.2.

AGREED.

4.3.3.7.3.2 Maintenance.

The RS's ability to provide internal components of RS hardware that will have a crew interface for maintenance only shall accommodate strength limitations in accordance with SSP 50094, paragraph 6.2 shall be verified by inspection, or analysis, or demonstration. The inspection shall be based upon data collected from review of hardware drawings and specifications. The analysis shall be performed using anthropometric simulations and operational procedures. The demonstration shall be based upon data collected during hardware testing and implementation of human factors test plans or data supplied from flight experience where applicable. The inspection, or analysis, or demonstration shall be considered successful when analysis of the data shows that the RS can provide internal components of RS hardware that will have a crew interface for maintenance only shall accommodate strength limitations of the population in accordance with SSP 50094, paragraph 6.2.

AGREED.

4.3.3.7.3.3 Emergency controls.

The RS's ability to provide emergency controls, hardware required for crew translation and emergency egress, and hardware for which time critical access is required designed to accommodate strength limitations in accordance with SSP 50094, paragraph 6.2 shall be verified by inspection, or analysis, or demonstration. The inspection shall be based upon data collected from review of hardware drawings and specifications. The analysis shall be performed using anthropometric simulations and operational procedures. The demonstration shall be based upon data collected during hardware testing and implementation of human factors test plans or data supplied from flight experience where applicable. The inspection, or analysis, or demonstration shall be considered successful when analysis of the data shows that the RS can provide emergency controls, hardware required for crew translation and emergency egress, and hardware for which time critical access is required designed to accommodate strength limitations in accordance with SSP 50094, paragraph 6.2.

AGREED.

4.3.3.7.4 Gloved operation.

The glove operation shall be verified by analysis. The analysis shall be based upon documentation defining EVA tasks and verification data. The analysis shall be considered successful when the data shows that for each identified EVA task, that the clearance shown in Figure 12 for a gloved–hand is provided to perform the task.

AGREED.

4.3.3.7.5 Location coding.

4.3.3.7.5.1 Alphanumeric coding.

The RS's ability to provide a single consistent alphanumeric on–orbit label coding standard, in accordance with SSP 50094, paragraph 6.4.7 for designating locations across the entire RS shall be verified by inspection. The inspection shall be based upon data collected from review of element assembly level layout and configuration drawings and specifications. The inspection shall be considered successful when analysis of the data shows that the RS can provide a single consistent alphanumeric on–orbit label coding standard, in accordance with SSP 50094, paragraph 6.4.7 for designating locations across the entire RS.

AGREED.

4.3.3.7.5.2 Accommodate changes.

The RS's ability to provide a coding system that accommodates changes to the International Space Station configuration shall be verified by inspection. The inspection shall be based upon data collected from review of element assembly level layout and configuration drawings and specifications. The inspection shall be considered successful when analysis of the data shows that the RS can provide a coding system that accommodates changes to the International Space Station configuration.

AGREED.

4.3.3.7.5.3 Reserved.

4.3.3.7.5.4 EVA primary translation path.

An inspection of the RS drawings shall be performed to verify the EVA primary translation path is marked to indicate the return direction to the pressurized volume. The inspection shall be considered successful when it is determined that the external translation path is marked to show the return route to the pressurized volume.

AGREED.

4.3.3.7.6 Housekeeping.

The RS's ability to provide modules designed to facilitate housekeeping in accordance with SSP 50094, paragraphs 6.3.3.1.5, 6.4.1, and 6.4.6 shall be verified by inspection. The inspection shall be based upon data collected from review of element assembly level configuration drawings or specifications. The inspection shall be considered successful when analysis of the data shows that the RS can provide modules designed to facilitate housekeeping in accordance with SSP 50094, paragraphs 6.3.3.1.5, 6.4.1, and 6.4.6.

AGREED.

4.3.3.8 Reserved.

4.3.3.9 System security.

Verification is based upon flight experience.

4.3.3.10 Environmental constraints.

4.3.3.10.1 Acoustic emission limits.

An integrated acoustic analysis shall be performed. The analysis shall include the integrated response of all element analyses and measured response data. The verification shall be considered successful when the analysis shows that the RS does not exceed the specified acoustic limits with ”bare hatches” closed.

AGREED.

4.3.3.10.2 External contamination releases.

A contamination analysis shall be performed using Russian side molecular flow models, contamination predictions, and materials data to model the generated on–orbit environment. The verification shall be considered successful if the predicted contamination releases are in accordance with SSP 50094, paragraph 3.3.4.1.

AGREED.

4.3.3.11 Design for remote controlled external operations.

The FGB capability to accommodate the grapple fixture interface shall be verified by analysis. The analysis shall utilize element level structural and electrical interface qualification test data. Verification shall be considered successful when the analysis shows the RS meets the requirements as specified in SSP 42121 ICD, appendix C.

4.3.3.11.1 Shuttle Remote Manipulator System (SRMS) robotic support of the SSP.

a. Verification shall be by inspection of drawings. Verification shall be considered successful when inspection of the drawings show that the FRGF location agrees with the NASA/RSC–E/3411–SPP, paragraphs 5.1.1 and 5.1.1.2.

b. Verification shall be by stress analysis of the SPP structure that is affected by the impact loads per NASA/R|SC–E/3411–SPP, paragraph 5.1.4. Verification shall be considered successful when stress analysis shows that the SPP structure meets requirements per NASA/R|SC–E/3411–SPP, paragraph 4.1.4.

c. Reserved.

d. Verification shall be by analysis of the SPP structure that is affected by the RMS loads per NASA/R|SC–E/3411–SPP, paragraph 5.1.3.1. Verification shall be considered successful when stress analysis shows that the SPP structure meets requirements per NASA/R|SC–E/3411–SPP, paragraph 4.1.4.

e. Verification shall be by analysis. Verification shall be considered successful when analysis confirm that structure meets the NASA/R|SC–E/3411–SPP, paragraph 5.1.3.3 requirements for natural frequencies.(TBR)

f. Verification shall be by test. Verification shall be considered successful when test confirms that electrical resistance between the grapple fixture and the SPP structure meets the NASA/R|SC–E/3411–SPP, paragraph 5.1.1.3 and 5.1.2.(TBR)

g. Verification shall be by NASA analysis and inspection of the drawings. Verification shall be considered successful when thermal analysis demonstrates that grapple fixture temperatures are within the limits specified in paragraph 5.1.5.4 and review of the drawings shows that the installation agrees with the NASA/RSC–E/3411–SPP, figure 5.1.2–2.

h. Verification shall be by inspection of drawings and mass properties report. Verification shall be considered successful when review of the report and the drawing shows that the mass and geometric configuration meet the constraints of the NASA/RSC–E/3411–SPP, attachment 1, Section 2.0.

i. Verification shall be by inspection of drawings and stress analysis. Verification shall be considered successful when inspection of the drawing shows that scuff plates installation agrees with the NASA/R|SC–E/3411–SPP, paragraph 5.3 and stress analysis confirms that the SPP structure meets requirements per NASA/R|SC–E/3411–SPP, paragraph 4.1.4.

AGREED.

4.3.3.11.2 SRMS to SSRMS robotic hand–off.

Verification shall be by robotics analysis. NASA will perform the analysis based on the verified RS modules, provided by RSA. Verification shall be considered successful when a robotics analysis shows that SRMS/SSRMS hand–off may be successfully completed using the FRGF and PDGF located as specified in reflected in the NASA/RSC–E/3411–SPP, paragraphs 5.1.1 and 5.1.2 and SSP 50227, paragraph A3.2.2.1.1.

AGREED.

4.3.3.11.3 Space Station Robotic Manipulator Support (SSRMS) of the SPP.

a. Verification shall be by analysis and testing. Verification shall be performed as specified in SSP 50227, Table A4–1, item A3.2.2.2.2.3.

b. Verification shall be by TBD. Verification shall be performed as specified in SSP 50227, Table A4–1, items A3.2.2.2.2.1 and A3.2.2.2.2.2.

c. Verification shall be by analysis and testing. Verification shall be performed as specified in SSP 50227, Table A4–1, item A3.2.2.2.2.4.

d. Verification shall be by test. Verification shall be considered successful when the test shows SPP compliance with the C&DH interface requirements in SSP 50097, paragraphs 3.4.1.1.1.8 and 3.4.11.2.4.1 as well as berthing operations requirements in SSP 50227, paragraphs E3.4.1.2 and E3.4.1.3.

e. Verification shall be by test. Verification shall be considered successful when the test shows SM compliance with the C&DH requirements during the berthing operations, specified in SSP 50227, paragraph E3.4.1.

f. Reserved.

g. Verification shall be by inspection of hardware. Verification shall be performed as specified in SSP 50227, paragraph B4.1.

h. Verification shall be by analysis. Verification shall be considered successful when the analysis shows that SPP berthing operation doesn't exceed the existing capabilities of the SSRMS.

AGREED.

4.3.3.11.3.1 SPP support of the Power Data Grapple Fixture (PDGF).

a. Verification shall be by inspection of drawings and through quality control. Verification shall be performed as specified in SSP 50227, Table A4–1, item A3.2.2.2.1.

b. Verification shall be by inspection of drawings. Verification shall be performed as specified in SSP 50227, Table A4–1, item A3.2.2.1.1.

c. Verification shall be by test and analysis. Verification shall be performed as specified in SSP 50227, Table A4–1, item A3.2.2.2.1 and 4.A3.2.2.2.2.

d. Verification shall be through quality control. Verification shall be performed as specified in SSP 50227, Table A4–1, item A3.2.2.3.

e. Verification shall be by test and analysis. Verification shall be performed as specified in SSP 50227, Table A4–1, item A3.2.2.4.

f. Verification shall be by analysis. Verification shall be performed as specified in SSP 50227, Table A4–1, item A3.2.2.5.

g. Verification shall be by test and analysis. Verification shall be performed as specified in SSP 50227, Table A4–1, item A3.2.2.6.

h. Verification shall be by test, inspection and analysis. Verification shall be performed as specified in SSP 50227, Table A4–1, entry A3.2.2.7.

AGREED.

4.3.3.12 Design requirements.

4.3.3.12.1 Structural design requirements.

Russian Segment structures shall be verified by test and analysis using the Russian approach as specified in SSP 50094, section 7. The verification shall be considered successful when the tests and analysis show that Russian Segment structures withstand all applied loads during their required service life with margins of strength not less than 1.0.

AGREED.

4.3.3.12.1.1 Structural design life for meteoroid and orbital debris analyses.

The verification shall be considered complete when PNP requirements shown in Paragraphs 3.3.12.1.1.1 and 3.3.12.1.1.2 are met using service life (exposure times) of 15 years or otherwise noted per specification or operational plans for nominal hatch closure.

AGREED.

4.3.3.12.1.1.1 Probability of No Penetration.

4.3.3.12.1.1.1.1 Structure Penetration.

The Probability of No Penetration of these RS elements shall be verified by analysis supported by test. The analysis shall be performed using the Bumper II or an equivalent analysis code, the

environment defined in paragraph 3.2.6.1.8 except as indicated in 3.3.12.1.1 and the launch dates specified in Table XV–A. Test shall be conducted to verify the protection systems ballistic limit equations used in the PNP analysis. The verification shall be considered successful when the analysis shows a minimum RS element PNP shown in Table XV–A from the specified launch dates.

AGREED.

4.3.3.12.1.2 Extravehicular Activity (EVA) on–orbit induced loads.

The EVA on–orbit induced loads shall be verified by analysis. The analysis shall be based on the element level test data that provides the structural verification for the equipment. The analysis shall be considered successful when the analysis shows that: the structural element to which an safety tether hook is attached can withstand a 100 kg limit load with a 200 kg ultimate load; inadvertent loads shall withstand a 50 kg load; while conducting manual operations linear forces shall not exceed 20 kgs; and one–handed torsional moments shall not exceed 0.4 kg–meters.

AGREED.

4.3.3.12.1.3 Additional M/OD space protections.

The provision for additional M/OD protection shall be verified by inspection of drawings for each element.

AGREED.

4.3.3.12.2 Window, glass and ceramic structural design.

Russian Segment windows shall be verified by the test and analysis methodologies of the Russian Institute of Technical Glass (ITG) as documented in SSP 50094, section 7.1.4.

AGREED.

4.3.3.12.3 Fracture control.

Russian Segment structures shall be verified by test. The testing shall take into account the entire history of loading during the required service life. The verification shall be considered successful when the test results show that there will be no through cracks which lead to loss of pressurization or structural integrity. The Joint Fracture Control Plan as specified in SSP 50094, appendix B, shall be the basis for joint work in the area of fracture control.

AGREED.

4.3.3.12.4 Structural Design Constraints.

The verification shall be by analysis. When the analysis shows that the RS contributes no more than 1.87 degrees about each axis to errors in attitude knowledge between the RS interface with the USOS and the body axes of the SM, then the verification shall be satisfied.

AGREED.

4.3.3.12.4.1 FGB Structural Design Constraint.

The verification shall be by analysis. When the analysis shows that the value of angular misalignment between the FGB/PMA–1 and FGB/SM mechanical interfaces due to the

manufacturing errors, temperature and pressurization induced deformations and on–orbit loads does not exceed 0.5 degrees about each axis of the FGB coordinate axis system, then the verification shall be considered satisfied.

AGREED.

4.3.3.12.4.2 SM Structural Design Constraint.

The verification shall be by analysis. When the analysis shows that the value of angular misalignment between the FGB/SM mechanical interfaces and the SM navigation base due to manufacturing errors, temperature and pressurization induced deformations and on–orbit loads shall not exceed 1.80 degrees about each axis of the SM coordinate axis system, then the verification shall be considered satisfied.

AGREED.

4.3.3.12.5 Fluid handling requirements.

4.3.3.12.5.1 Fluid quantity determination.

The RS capability to determine quantity in a fluid storage and resupply system shall be verified by inspection of engineering drawings. An inspection shall be performed to verify that the means to determine quantity in the fluid storage and resupply system is on the RS. The verification shall be considered successful when the inspection shows that the capability exists to determine quantity on the RS in the fluid storage and resupply system.

AGREED.

4.3.3.12.5.2 Interface hardware.

Verification shall be in accordance with SSP 42121 ICD, paragraph 4.3.2.2.2.3.4 and Table 4.1.

AGREED.

4.3.3.12.5.3 Flexible lines and bellows design.

RS flexible lines and bellows shall be verified by test or analysis. The verification shall be considered successful when RS flexible lines and bellows are shown not to be susceptible to flow–induced vibration. (TBR)

AGREED.

4.3.3.12.6 Knobs and fasteners.

The verification shall be considered successful when an inspection of the RS drawings is performed which verifies the knobs and fasteners used on removable structure and components are in accordance with the conditions listed in Russian Segment Specification 3.3.12.6.

AGREED.

4.3.3.12.7 Atmosphere leakage.

The capability of the RS to have a total atmospheric leakage of less than 0.009 pounds per day (0.02 kg per day) shall be verified by analysis. An analysis shall be performed to verify that the

RS has a total atmospheric leakage of less than 0.009 pounds per day (0.02 kg per day). This verification shall be considered successful when the analysis shows that the RS will have a total atmospheric leakage of less than 0.009 pounds per day (0.02 kg per day).

AGREED.

4.3.3.12.8 Operational altitude.

a. The Operational Altitude Strategy requirement specified in section 3.3.12.8(a) for the post–assembly phase shall be verified by analysis. The analysis shall be performed using the neutral atmosphere definition as defined in section 3.2.6.12. In addition, analysis shall be used to verify the quasi–steady microgravity requirement defined in section 3.2.1.1.4.1.1a. Analysis shall be used to verify that the altitude limitations specified for the Soyuz vehicle, Progress vehicles, and the Service Module are not violated. Furthermore, these analyses shall be confirmed by comparison of the analytical model to actual observed data from the on–orbit segments.

b. The Operational Altitude Strategy requirement specified in section 3.3.12.8(b) for the assembly phase shall be verified by analysis. The analysis shall be performed using the neutral atmosphere definition as defined in section 3.2.6.12. Furthermore, the analysis shall be confirmed by comparison of the analytical model to actual observed data from the on–orbit segments.

AGREED.

4.3.3.12.9 Preclude condensation.

The temperature of surfaces exposed to the cabin atmosphere shall be verified by analysis. The verification will be considered successful when the analysis results indicate that the temperature of surfaces exposed to the cabin atmosphere are greater than the cabin atmosphere dew point temperature.

AGREED.

4.3.3.12.10 Venting/dumping.

A venting and dumping analysis shall be performed using RS venting and dumping data. The verification shall be considered successful if the predicted venting and dumping releases are in accordance with SSP 50094 paragraph 3.3.5.2.

AGREED.

4.3.3.13 EVA equipment handling capabilities.

The EVA mass handling capabilities shall be verified by analysis. The analysis shall be based upon documentation defining the mass of all components to be handled via EVA and the corresponding EVA tasks and external worksites. Past flight experience may be used in the analysis. The analysis shall be considered successful when the data shows that the identified component masses are within the EVA handling capabilities in Table XVI. For the components that exceed the EVA mass handling capabilities, the verification shall be performed by demonstration.

AGREED.

4.3.3.14 MIL–STD–1553 data bus addresses.

The MIL–STD–1553 data bus addresses shall be verified by test. The test shall be as follows:

All MIL–STD–1553 terminals for the bus under test shall be installed and powered on for this test, with the exception of MDM bus controllers, which remain connected but are powered off.

Test Harness 1 (Figure 15) is connected to the bus segment's external interface connector at the interface specified in Table XX. In the case of "feed–through" bus segments, Test Harness 2 (Figure 16) is connected to the opposite end of the bus.

If no active BC is present on the Bus Under Test, a MIL–STD–1553 command word shall be injected using Test Harness 1, such that individual RTs will generate a status word response.

The correct RT addressing shall be verified by monitoring each RT's response to valid MIL–STD–1553 command words. The test shall be considered successful when a given RT responds exclusively to its address, with none of its status word error flags set.

For external RT locations, where the RT address is established by a connector contained within the element, correct addressing shall verified by inspection.

This test is not intended to verify bus addressing which is controlled through software.

AGREED.

4.3.3.15 MIL–STD–1553 data bus constraints.

Not applicable.

AGREED.

4.3.3.15.1 SSQ components.

This requirement shall be verified by inspection. This shall be considered successful when drawings for RS MIL–STD–1553 data bus parts for flight hardware are inspected to ensure all data bus components on buses that cross end item interfaces are selected from the SSQ components list or approved NASA/RSA list.

AGREED.

4.3.3.15.1.1 Bus coupler type.

This requirement shall be verified by inspection. Drawings shall be inspected to ensure Bus couplers have a maximum of three stubs per coupler on buses that cross end item interfaces.

AGREED.

4.3.3.15.2 Bus stub length.

This requirement shall be verified by analysis. An analysis of end item and remote terminal drawings shall be performed to determine the length of the bus stub from each Remote Terminal isolation transformer to the TIU external connector interface and the length of the bus stub from the TIU external interface to the bus coupler coupling transformer in accordance with Figure 12–A, measurement A. Verification is successful when the analysis ensures the combined bus stub length from each Remote Terminal isolation transformer to the bus coupler coupling transformer is a maximum of 20 ft.

AGREED.

4.3.3.15.3 Bus coupling.

This requirements shall be verified by inspection. Drawings shall be inspected to ensure that all bus stub connections are by SSQ coupling transformers and caps are on unterminated stubs.

AGREED.

4.3.3.16 Terminal Interface Units.

This requirement shall be verified by test. This test shall be considered successful when all TIU's except the US provided Space Station Multiplexer/Demultiplexer, meet all conditions of MIL–HDBK–1553, appendix A with exceptions as defined in SSP 50342.

4.3.3.16.1 TIU Multiple Bus Isolation.

This requirement shall be verified by test. This test, setup as specified in Figure 18 shall be performed only if the TIU is configured with multiple MIL–STD–1553 buses. A valid legal transmit command shall be sent to the TIU requesting the maximum number of data words that it is capable of sending. The voltage of the output waveform transmitted by the TIU shall be measured on all buses. Each data bus shall be alternately activated and measurements taken. The test shall be considered successful when the ratio between the output peak–to–peak voltage on the active bus (V1) and the output peak–to–peak voltage on each inactive bus (V2) is greater than or equal to 65 dB (Figure 18), except for the redundant channel of the active bus. The measured parameter, bus output isolation, expressed as a ratio in dB, shall be recorded for each bus combination.

AGREED.

4.3.3.17 RS not–to–exceed bus length.

This requirement shall be verified by inspection. Drawings shall be inspected to ensure that all bus lengths do not exceed the specified lengths in Table XVI–A. This inspection shall be considered successful when the bus lengths do not exceed the lengths specified in Table XVI–A.

AGREED.

4.3.4 Computer resource requirements.

4.3.4.1 Computer hardware design considerations.

Computer hardware design considerations as specified, shall be verified by inspection in accordance with the comprehensive parts and components table.

AGREED.

4.3.4.2 Flexibility and expansion.

An analysis of the software shall be performed to verify that the flight software is modifiable from the ground and is partitioned between code and data. Verification is considered successful when the analysis indicates that the flight software is modifiable from the ground and is partitioned between code and data.

AGREED.

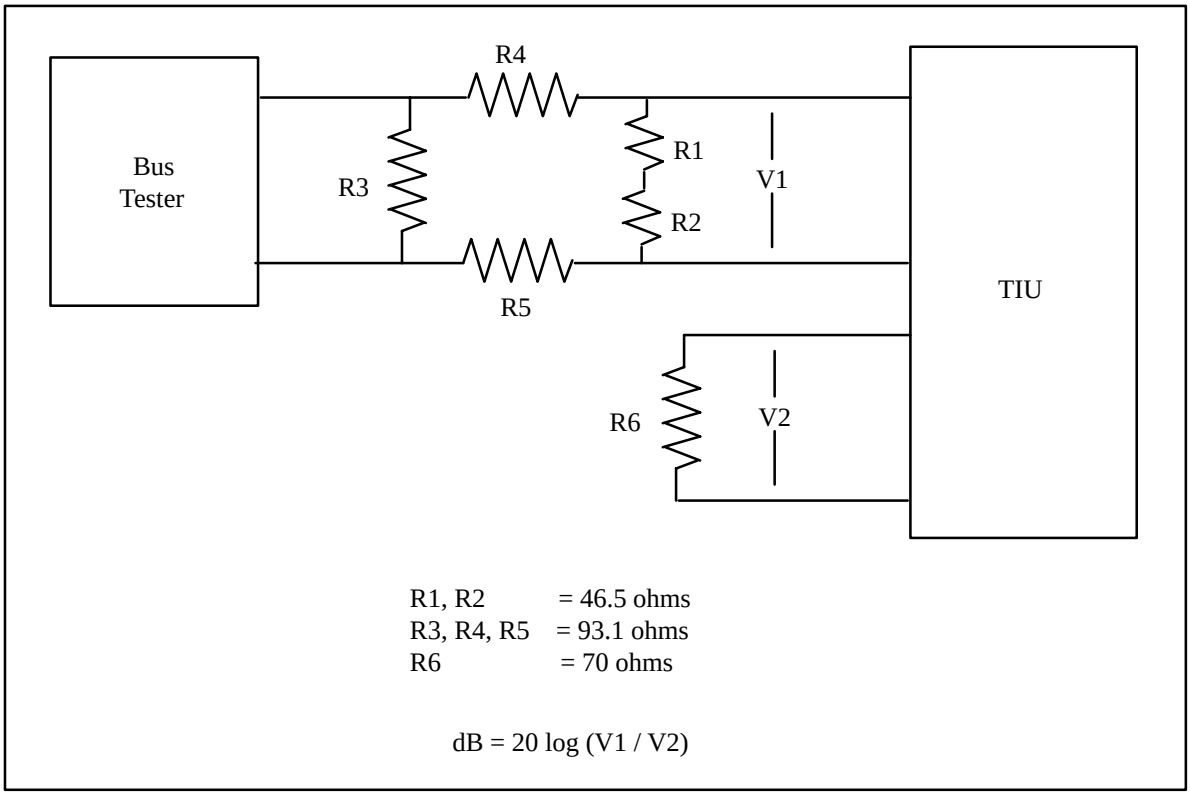

FIGURE 18. TIU bus isolation test set–up

4.3.5 Logistics.

4.3.5.1 Maintenance.

4.3.5.1.1 General maintenance requirements.

4.3.5.1.1.1 RS logistics infrastructure.

The RS's ability to sustain the On–Orbit Russian Segment with the necessary infrastructure which enables the performance of on–orbit maintenance and enables the handling of the required logistics equipment, material and services in orbit shall be verified by inspection or analysis. The inspection and analysis shall be based upon data collected from review of element assembly level layout and configuration drawings and specifications as well as data provided from hardware testing and/or upon data collected from flight experience. The inspection and analysis shall be considered successful when it shows that the RS can sustain the On–Orbit Russian Segment with the necessary infrastructure which enables the performance of on–orbit maintenance and enables the handling of the required logistics equipment, material and services in orbit.

AGREED.

4.3.5.1.1.2 ORU maintenance level distribution.

The RS's ability to return procured RS ORUs to serviceable status, primarily through the repair of failed ORUs at approved maintenance levels, shall be verified by inspection. The inspection

shall be based upon data collected from review of hardware maintenance specifications and maintenance procedure plans and/or upon data collected from flight experience. The inspection shall be considered successful when the analysis shows that the RS is able to return procured RS ORUs to serviceable status, primarily through the repair of failed ORUs at approved maintenance levels.

AGREED.

4.3.5.1.2 Perform on–orbit maintenance.

4.3.5.1.2.1 ORU removal and replacement.

The RS's ability to provide on–orbit return of the RS to an operational condition primarily through the removal and replacement of failed ORU's from their installed location shall be verified by inspection and analysis. The inspection and analysis shall be based upon data collected from the review of hardware drawings and specifications and/or upon data collected from flight experience. The inspection and analysis shall be considered successful when they show the RS can provide on–orbit return of the RS to an operational condition primarily through the removal and replacement of failed ORU's from their installed location.

AGREED.

4.3.5.1.2.2 In situ maintenance.

The RS's ability to define requirements for in situ maintenance as required for the failure modes which cannot be corrected by ORU removal and replacement shall be verified by inspection. The inspection shall be based upon data collected by reviewing in situ maintenance requirements and plans and/or upon data collected from flight experience. The inspection shall be considered successful when the analysis shows that the RS can define requirements for in situ maintenance as required for the failure modes which cannot be corrected by ORU removal and replacement.

AGREED.

4.3.5.1.2.3 Maintenance coordination.

The RS's ability to accommodate coordinated application of approved on–orbit Organizational maintenance equipment, tools, spares and material as required to sustain the station shall be verified by inspection. The inspection shall be based upon data collected by reviewing in situ maintenance requirements and plans and/or upon data collected from flight experience. The inspection shall be considered successful when the analysis shows that the RS can accommodate coordinated application of approved on–orbit Organizational maintenance equipment, tools, spares and material as required to sustain the station.

AGREED.

4.3.5.1.2.4 ORU packaging.

Analysis shall be conducted using on–orbit intermediate maintenance selection criteria, maintenance planning and ORU assembly drawings. The verification shall be considered successful when the analysis proves that selected on–orbit intermediate maintenance tasks comply with the maintenance selection criteria with a minimal impact on resupply, return, and on–orbit resources. Success is also measured by USOS logistics infrastructure readiness to support coordination of RS activities.

AGREED.

4.3.5.1.2.5 Procedure storage.

An analysis of the service module computer system shall be performed to verify that the computer system can electronically store and recall maintenance procedures. Verification is considered successful when the analysis indicates that the service module computer system is capable of electronically storing and recalling maintenance procedures.

AGREED.

4.3.5.1.2.6 Liquid or gas venting.

Verification shall be done by analysis. The verification shall be considered successful when the analysis proves that venting provisions have been incorporated and accommodated for those ORUs containing liquids or gases which do not contain inherent provisions for retaining serviceable and safe status during transition through Resupply and Return environmental pressure variations.

4.3.5.2 Supply.

4.3.5.2.1 General supply requirements.

4.3.5.2.1.1 Sustaining fleet resources.

Analysis shall be conducted using the RSA and U.S. Traffic Models, and the NASA microgravity model. The verification shall be considered successful when the analyses prove that the RS resupply schedules are sufficient to meet the station needs in propellant, crew supplies, and other life support logistics, while meeting the micro–gravity yearly requirements as identified in paragraph 3.2.1.1.4.1.1.

The RS on–orbit propellant transfer function shall utilize automated interfacing and shall accommodate propellant transfer operations from the resupply vehicle. The operations of the transfer process, the quantity of propellant transferred, and the operational life of components of the propellant transfer systems will be verified during the ground tests in accordance with the test plans.

AGREED.

4.3.5.2.1.2 Missed resupply crew provisions.

Analysis shall be conducted using the crew storage design and consumption data. The verification shall be considered successful when the analysis proves that the RS crew provisions storage accommodations are sufficient for the missed resupply requirements when combined with the accommodation requirements for nominal RS crew provisions. Analysis is based on crew population and historical demands. Partner histories are included in the assessments to determine the adequacy of integrated planning. Success is measured by planning within resupply allocations.

AGREED.

4.3.5.2.1.3 Maintenance resources.

The RS shall provide forty five days of RS critical spares provisions stored on–orbit to accommodate survival requirements in the event of a missed resupply. Analysis shall be conducted using failure analysis and data, maintenance planning, cargo provision stowage design

data and stowage assignment data. The verification shall be considered successful when the analysis proves that the maintenance resource provisions accommodate forty five days of RS crew provisions for a crew of 3.

AGREED.

4.3.5.2.1.4 On–orbit propellant reserve.

The skip cycle propellant requirement described in paragraph 3.5.2.1.4 shall be verified by analysis. The analysis shall be based upon the propulsion system design, operational altitude strategy, the neutral atmosphere conditions, and the logistics support analysis. The verification shall be considered successful when the analysis shows that propellant available meets the design requirement.

AGREED.

4.3.5.2.2 Provide inventory management capability.

4.3.5.2.2.1 Critical item storage.

Analysis shall be conducted using failure analysis and data, maintenance planning, cargo provision stowage design data and stowage assignment data. The verification shall be considered successful when the analysis proves that the critical item provision stowage adequately accommodates nominal resupply interval spares stowage requirements.

AGREED.

4.3.6 Reserved.

4.3.7 Characteristics of major functional elements.

4.3.7.1 Functional Cargo Block.

4.3.7.1.1 Purpose.

Verification requirements not applicable.

4.3.7.1.2 Description.

Verification requirements not applicable.

4.3.7.1.3 Capabilities.

4.3.7.1.3.1 Control total pressure.

4.3.7.1.3.1.1 Monitor total pressure.

The capability of the FGB to monitor the atmospheric total pressure over a range of 0.02 to 19.4 psia (1 to 1000 mm Hg) with an accuracy of +/– 0.58 psi (+/–30 mm Hg) shall be verified by analysis. The analysis shall be based on a test of the total pressure sensor. The requirement verification will be considered successful when the analysis proves that the total pressure sensor can monitor the total pressure over a range of 0.02 to 19.4 psia (1 to 1000 mm Hg) with an accuracy of +/– 0.58 psi (+/–30 mm Hg) when integrated into the FGB.

AGREED.

4.3.7.1.3.2 Control oxygen partial pressure.

4.3.7.1.3.2.1 Monitor oxygen partial pressure.

The capability of the FGB to monitor the oxygen partial pressure over a range of 0 to 5.8 psia (0 to 300 mm Hg) with an accuracy of +/– 0.23 psi (+/–12 mm Hg) shall be verified by analysis. The analysis shall be based on a test of the oxygen partial pressure sensor. The requirement verification will be considered successful when the analysis proves that the oxygen partial pressure sensor can monitor the oxygen partial pressure over a range of 0 to 5.8 psia (0 to 300 mm Hg) with an accuracy of +/– 0.23 psi (+/–12 mm Hg) when integrated into the FGB.

AGREED.

4.3.7.1.3.3 FGB to PMA1 Leak Seal Monitoring and Repressurization.

a. The capability of the FGB to repressurize twice an isolated PMA1 from 0 psia (0 mm Hg) to a pressure between 9.57 psia (495 mm Hg) and 13.54 psia (700 mm Hg) by means of the joint leak seal monitoring system in the FGB with an equivalent diameter of not less than 0.157 inches (4 mm) shall be verified by analysis. The analysis shall be based on drawings of the valves and plumbing in the FGB. The analysis will be considered successful when it is shown that the FGB can repressurize PMA1 twice from 0 psia (0 mm Hg) to a pressure between 9.57 psia (495 mm Hg) and 13.54 psia (700 mm Hg) and that the FGB can monitor the FGB to PMA 1 seals.

b. The joint seal leak monitoring shall be verified using the applicable verification requirements as specified in SSP 42121, paragraph 3.2.2.2.6.2 and Table 4–1.

c. The ability to make assessed PMA1 repress status and data available to the USOS shall be verified by analysis. Verification shall be considered successful when the analysis indicates the repress status and data are properly formatted and made available to the appropriate data bus during a repress event in accordance with SSP 50097 ICD, paragraph 3.4.3.1.2.

AGREED.

4.3.7.1.3.4 Equalize Pressure.

The capability of the FGB to equalize pressure shall be verified by analysis. An analysis shall be performed using qualification data to verify that the FGB will equalize pressure to the specified limits. The analysis shall determine the maximum time to equalize pressure. The requirement verification is considered successful when the analysis proves that the FGB will equalize the pressure differential between adjacent isolated volumes up to 1766 cubit feet (50 cubit meters) at 15.0 psia (775 mm Hg) and 14.3 (740 mm Hg) to less than 0.01 psid (0.5 mm Hg) within 3 minutes.

AGREED.

4.3.7.1.3.4.1 Control atmosphere temperature.

4.3.7.1.3.4.1.1 Monitor atmosphere temperature.

The capability to monitor the atmospheric temperature within the habitable volume of the FGB within the range 60.8 to 89.6 degrees F (16 to 32 degrees Celsius) with an accuracy of +/– 1.8 degrees F (+/–1 degree C) shall be verified by analysis of the documentation of the data handling system, and analysis of the temperature sensor test data. On the basis of the results of this analysis a final report shall be issued. Verification shall be considered successful if the FGB can

monitor the temperature in the habitable volume of the FGB within the range of 60.8 to 89.6 degrees F (16 to 32 degrees Celsius) with an accuracy of +/– 1.8 degrees (+/–1 degrees C).

AGREED.

4.3.7.1.3.4.1.2 Remove atmosphere heat.

The capability of the thermal control system of the FGB to maintain the temperature of the atmosphere in the habitable volume of the FGB within the range of 64 to 82 degrees F (18 to 28 degrees C) with the stabilized temperature within the range of +/– 3 degrees F (1.5 degrees C) of the selected temperature shall be verified by analysis of the design documentation, the results of an analytical model of the FGB, the results of testing the thermal control system of the FGB, and the results of operating similar flight articles under similar operating conditions. On the basis of the results of this analysis a final report shall be issued. Verification shall be considered to be successful if the thermal control system of the FGB can maintain the atmosphere temperature in the habitable volume of the FGB within the range of 64 to 82 degrees F (18 to 28 degrees C) with the stabilized temperature within the range of +/– 3 degrees F (1.5 degrees C) of the selected temperature.

AGREED.

4.3.7.1.3.4.2 Control atmosphere moisture.

4.3.7.1.3.4.2.1 Monitor humidity.

The capability of the FGB to monitor the humidity levels over a range of 0.02 to 0.68 psia (1 to 35 mm Hg) with an accuracy of +/– 0.029 psi (+/–1.5 mm Hg) shall be verified by analysis. The analysis shall be based on a test of the water vapor pressure sensor. The requirement verification will be considered successful when the analysis proves that the FGB can monitor the humidity levels pressure over a range of 0.02 to 0.68 psia (1 to 35 mm Hg) with an accuracy of +/– 0.029 psi (+/–1.5 mm Hg) when the water vapor pressure sensor is integrated into the FGB.

AGREED.

4.3.7.1.3.5 Circulate atmosphere.

4.3.7.1.3.5.1 Circulate atmosphere intra–module.

The capability to circulate the atmosphere in the habitable volumes of the FGB within the range of 10 to 40 feet per minute (0.05 to 0.2 meter per second) shall be verified by analysis of the ventilation schematics of the FGB and the results of the ventilation testing of the habitable volumes of the FGB flight article or a similar module. On the basis of the results of this analysis a final report shall be issued. Verification shall be considered successful if the circulation of the atmosphere in the habitable volumes of the FGB is shown to be maintained within the range of 10 to 40 feet per minute (0.05 to 0.2 meter per second).

AGREED.

4.3.7.1.3.5.2 Circulate atmosphere inter–module.

The capability of the FGB to transfer intermodule atmosphere shall be verified by analysis of the intermodule ventilation schematics of the FGB and the results of the ventilation testing of the components and equipment performing this function. On the basis of the results of this analysis a report shall be issued. Verification shall be considered successful if the FGB can transfer

intermodule atmosphere in accordance with the joint interface requirements in SSP 42121, US On–Orbit Segment Pressurized Mating Adapter – 1 to Russian Segment FGB Interface Control Document.

AGREED.

4.3.7.1.3.6 Isolate to recovery level.

Failure, isolation, and recovery, from loss of FGB functions identified in Table XVII shall be verified by analysis plus selected demonstrations on Russian equipment to check software in accordance with the method for evaluating credible off–nominal situations. The list of analysis and demonstration data is identified in 4.3.2.1.1.1.4.1.

AGREED.

4.3.7.1.3.7 Recover lost function.

Failure, isolation, and recovery, from loss of FGB functions as specified in 3.7.1.3.7, shall be verified by analysis plus selected demonstrations on Russian equipment to check software in accordance with the method for evaluating credible off–nominal situations. The list of analysis and demonstration data is identified in 4.3.2.1.1.1.4.1.

AGREED.

4.3.7.1.3.8 Safe.

Failure, isolation, or safing of identified hazardous conditions as specified in 3.7.1.3.8, shall be verified by analysis in accordance with the method for evaluating credible off–nominal situations. The list of analysis data is identified in 4.3.2.1.1.1.4.1.

AGREED.

4.3.7.1.3.9 Reserved.

4.3.7.1.3.10 Reserved.

4.3.7.1.3.11 Distribute time.

The FGB ability to distribute time as specified in 3.7.1.3.11, shall be verified by analysis in accordance with the time distribution table. The list of analysis data is identified in 4.3.2.1.1.1.11.1.

AGREED.

4.3.7.1.3.12 Provide data to crew.

The FGB ability to provide data to the crew as specified in 3.7.1.3.12, shall be verified by demonstration in accordance with the crew data provision table. The list of demonstration data is identified in 4.3.2.1.1.1.6.1.

AGREED.

4.3.7.1.3.13 Acquire function status data.

4.3.7.1.3.13.1 Collect function status data.

The FGB ability to collect function status data as specified in 3.7.1.3.13.1 shall be verified by analysis in accordance with the onboard systems status verification tables. The list of analysis data is identified in 4.3.2.1.1.1.7.1.

AGREED.

4.3.7.1.3.14 Assess function status data.

The FGB ability to assess function status data as specified in 3.7.1.3.14 shall be verified by analysis in accordance with the onboard systems status verification tables. The list of analysis data is identified in 4.3.2.1.1.1.7.1.

AGREED.

4.3.7.1.3.15 Provide Crew Control Interface.

The FGB ability to provide the capability for crew interactive control of on–orbit ISS critical systems, caution and warning messages, and integrated plan functions using a portable U.S. laptop computer by providing two computer receptacles located in the FGB shall be verified by demonstration of electrical signal characteristics between the receptacle and the USOS.

AGREED.

4.3.7.1.3.16 Reserved.

4.3.7.1.3.17 Respond to fire.

The FGB's ability to provide Portable Breathing Apparatuses and Portable Fire Extinguishers shall be verified by inspection. An inspection of the FGB drawings shall be performed to verify that the FGB has Portable Breathing Apparatuses and Portable Fire Extinguishers. The verification shall be considered successful when the inspection of the FGB drawings shows that the FGB has Portable Breathing Apparatuses and Portable Fire Extinguishers.

AGREED.

4.3.7.1.3.17.1 Detect fire event.

The FGB's ability to detect a fire event shall be verified by analysis and inspection. An analysis shall be performed to determine if the fire protection selection criteria has been met in each location within the FGB in accordance with Figure 4. An inspection of the drawings shall be performed to verify that the detection and visual indication hardware will be located in the FGB in accordance with Figure 4. An inspection of the FGB's Caution and Warning drawings and/or software documentation shall be performed to verify that a Class 1 fire alarm can be activated for a detected event location. The verification shall be considered successful when: (1) the analysis determines that all locations in the FGB have been evaluated in accordance with Figure 4; (2) when the inspection of the FGB drawings and/or documents have shown that the FGB can activate a Class 1 fire alarm for a detected fire event; and (3) all detection and visual indication hardware have been located in the FGB in accordance with Figure 4.

AGREED.

4.3.7.1.3.17.2 Isolate fire control zone.

The FGB's capability to isolate a fire control zone shall be verified by analysis. An analysis shall be performed to determine that: (1) the FGB can remove power and forced airflow (stop the ventilation fans excluding fans required for FGB critical operations) at the affected location, as determined by the selection criteria in Figure 4, within 30 seconds and; (2) that the FGB can prevent airflow between modules within 30 seconds of the annunciation of a Class 1 fire alarm. The verification shall be considered successful when the analysis shows that (1) the FGB can remove power and forced airflow at the affected location, as determined by the selection criteria in Figure 4, within 30 seconds, and; (2) that the FGB can prevent airflow between modules within 30 seconds of the annunciation of a Class 1 fire alarm.

AGREED.

4.3.7.1.3.17.3 Extinguish fire.

The FGB's ability to extinguish a fire shall be verified by analysis. An analysis shall be performed to determine that the FGB can eliminate a fire through suppressant discharge. The analysis shall be based on previously concluded suppression experiments and the resulting analysis. The verification shall be considered successful when the analysis shows that the FGB can eliminate a fire within one minute of suppressant discharge.

AGREED.

4.3.7.1.3.17.4 Recover from fire.

The FGB's capability to recover from a fire shall be verified by analysis. An analysis shall be performed to verify that the FGB's atmosphere can be restored below the levels in Table V. The verification shall be considered successful when the analysis shows that the atmosphere can be restored below the levels given in Table V.

AGREED

4.3.7.1.3.18 Reserved.

4.3.7.1.3.19 Respond to hazardous atmosphere.

The FGB's ability to provide a 15 minute supply of portable emergency breathing capability per crewmember shall be verified by inspection. The inspection shall be based upon data collected by reviewing PBA hardware drawings and specifications. The inspection shall be considered successful when analysis of the data shows that the FGB is able to provide a 15 minute supply of portable emergency breathing capability per crewmember.

AGREED.

4.3.7.1.3.20 Provide electrical power.

4.3.7.1.3.20.1 Generate Power.

The verification shall be considered successful when an analysis is performed which verifies power generation capability, power provided to the USOS, and power usage for housekeeping and sustaining operations for the FGB in accordance with Table IV. All analyses shall be based on the nominal conditions for all hardware and software (for example; no failures or required maintenance actions).

The orbital conditions to be considered are defined as:

a. Flight orientation as defined in Table XII–A.

b. Orbital inclination is 51.6 degrees.

c. Solar flux constant is 1371 Watts per square meter.

d. Earth infrared radiation is 241 Watts per square meter.

e. Albedo is 0.27.

f. Orbital Dynamics (Beta Angle, etc.)

g. Flight Dynamics (Vehicle Altitudes, etc.)

h. Shadowing of the arrays.

AGREED.

4.3.7.1.3.20.2 Distribute power.

Verification will be considered successful when an inspection of the flight article drawings shows the FGB is rated to distribute the power specified in Table IV. The power at the FGB/USOS interface shall be verified using the applicable verification requirements as specified in SSP 42121, paragraphs 4.3.2.2.4, Table 4.1, B.4.3.2.2.1, and Table B4.1, as well as all joint test and analysis activities which have been agreed to by RSA/KhSC and NASA/Prime. The power at the FGB/ICM interface shall be verified using the applicable verification requirements as specified in SSP 50269, Table 4–1, ICD paragraph number 3.2.1.2.3.5.1.

AGREED.

4.3.7.1.3.20.3 Store energy.

The requirement shall be verified when paragraph 3.7.1.3.20.1 is verified.

AGREED.

4.3.7.1.3.21 Reserved.

4.3.7.1.3.22 Maintain Thermal Conditioning.

The FGB's thermal control system's ability to collect thermal energy from heat generating equipment (3.7.1.3.22.1), to transmit it (3.7.1.3.22.2) and dispose of it into the ambient environment (3.7.1.3.22.3) shall be verified by evaluation of computational results, results of independent thermal tests of its components, and results of testing of similar ground and/or flight systems. The results of this evaluation will be documented in a final report. The verification will be considered successful when the thermal control system is shown to be capable of assuring the required thermal conditioning of the FGB components.

AGREED.

4.3.7.1.3.22.1 Collect thermal energy (See 4.3.7.1.3.22).

4.3.7.1.3.22.2 Transmit thermal energy (See 4.3.7.1.3.22).

4.3.7.1.3.22.3 Dispose of thermal energy (See 4.3.7.1.3.22).

4.3.7.1.3.22.4 Passive thermal energy.

The capability of the FGB to comply with the specified requirements shall be verified by analysis, modeling and testing. Verification shall be considered successful when analysis, modeling and testing shows that the FGB complies with passive thermal requirements as specified herein.

AGREED.

4.3.7.1.3.23 Reserved.

4.3.7.1.3.24 Support internal crew restraint and mobility.

a. The FGB's ability to support internal crew translation through pressurized volumes shall be verified by inspection. The inspection shall be based upon data collected by reviewing element assembly drawings and restraint and translation aids layout drawings. The inspection shall be considered successful when analysis of the data shows that the FGB supports internal crew translation through pressurized volumes.

b. The FGB's ability to incorporate handholds and handrails into the interior of the pressurized volumes to facilitate the crew's mobility and stability shall be verified by inspection. The inspection shall be based upon data collected by reviewing element assembly drawings and handhold and handrail layout drawings. The inspection shall be considered successful when analysis of the data shows that handholds and handrails are incorporated into the interior of the pressurized volumes to facilitate the crew's mobility and stability.

c. Restraints and mobility aids shall be designed in accordance with the following requirements:

(1). The FGB's ability to provide fixed or portable inside vehicular activity mobility aids shall be provided as follows:

A. Around workstations, access hatches, doors, windows, and pressure hatches.

B. At designated terminal points and direction change points on established crew translation paths.

C. For inside EVA suited operations.

D. Located where the crewmember is protected from identified hazards shall be verified by inspection.

E. Oriented and located to be consistent with crew tasks they are supporting.

All shall be verified by inspection. The inspection shall be based upon data collected by reviewing element assembly drawings and restraint hardware layout drawings. The inspection shall be considered successful when analysis of the data shows that the FGB is able to provide fixed or portable inside vehicular activity mobility aids located in the areas identified above.

(2). The FGB's ability to provide inside vehicular activity crew restraints at the following locations:

A. At identified locations where crewmembers are expected to exert forces which cause the body to move in reaction.

B. At crew stations:

All shall be verified by inspection. The inspection shall be based upon data collected by reviewing element assembly drawings and restraint hardware layout drawings. The inspection shall be considered successful when analysis of the data shows that the FGB is able to provide inside vehicular activity crew restraints located in the areas identified above.

(3). The FGB's inside vehicular activity personnel restraints ability to comply with the following requirements:

A. Restraint design shall eliminate muscular tension.

B. The personnel restraint system shall be capable of on–orbit cleaning and repair.

C All fixed and portable internal vehicle handholds and handrails shall be designed to an ultimate load of 445 N (100 lbf) applied in any direction without failure or damage.

D. Items restrained with hook and loop fasteners shall be equipped with the hook type fastener and the restraining surface shall be equipped with the loop type fastener.

All shall be verified by inspection and/or demonstration. The inspection shall be based upon data collected by reviewing element assembly drawings and restraint hardware layout drawings. The demonstration shall be based upon data collected during simulated weightless environment testing and maintenance procedure review or upon data collected from flight experience. The inspection and/or demonstration shall be considered successful when analysis of the data shows that the FGB's inside vehicular activity personnel restraints comply with the requirements stated above.

(4). The FGB's inside vehicular activity fixed and portable foot restraints ability to meet the following requirements:

A. All foot restraints shall maintain foot position to allow the crewmember a complete range of motion (roll, pitch, and yaw).

B. Inside vehicular activity foot restraints and covers shall allow ventilation to the feet.

C. The foot restraint shall be capable of being removed for replacement/repair:

D. Foot restraints shall be designed to withstand a tension load of 445 N (100 lbf) as a minimum. Foot restraints shall withstand a torsion load of 100 Nm (75 lbf) as a minimum with the torsion vector parallel to the floor.

All shall be verified by inspection and/or demonstration. The inspection shall be based upon data collected by reviewing element assembly drawings and restraint hardware layout drawings. The demonstration shall be based upon data collected during simulated weightless environment testing and maintenance procedure review or upon data collected from flight experience. The inspection and/or demonstration shall be considered successful when analysis of the data shows that the FGB's inside vehicular activity fixed and portable foot restraints comply with the requirements stated above.

(5). The FGB's inside vehicle mobility paths' ability to meet the following requirements:

A. The minimum cross sectional dimensions of microgravity translation paths for one crewmember in light clothing shall be 65 cm.

B. A minimum interior cross section dimension of 80 cm shall be maintained to support equipment translation, with exception of hatchways containing airducts and temporary cables or with exception of flexible guards around hatchways.

C. Equipment exposed to the translation path shall be designed to withstand a design load of 556 N (125 lbf) and a minimum ultimate load of 778 N (175 lbf).

D. Non–structural closures shall be capable of sustaining crew–imposed minimum design load of 556 N (125 lbf) distributed within a 10” diameter circle and a minimum ultimate load of 778 N (175 lbf) distributed within a 10” diameter circle.

All shall be verified by inspection and/or demonstration. The inspection shall be based upon data collected by reviewing element assembly drawings and restraint hardware layout drawings. The demonstration shall be based upon data collected during maintenance procedure review or upon data collected from flight experience. The inspection and/or demonstration shall be considered successful when analysis of the data shows that the FGB’s inside vehicular mobility paths comply with the requirements stated above.

AGREED.

4.3.7.1.3.25 Control carbon dioxide.

4.3.7.1.3.25.1 Monitor carbon dioxide.

The capability of the FGB to monitor the atmospheric carbon dioxide levels pressure over a range of 0 to 0.48 psia (0 to 25 mm Hg) with an accuracy of +/– 0.038 psi (+/–2 mm Hg) shall be verified by analysis. The analysis shall be based on a test of the carbon dioxide sensor. The requirement verification will be considered successful when the analysis proves that the carbon dioxide sensor can monitor the atmospheric carbon dioxide levels pressure over a range of 0 to 0.48 psia (0 to 25 mm Hg) with an accuracy of +/– 0.038 psi (+/–2 mm Hg) when integrated into the FGB.

AGREED.

4.3.7.1.3.26 Control airborne particulate contaminant.

4.3.7.1.3.26.1 Remove airborne particulate contaminants.

The capability to remove airborne particulate contaminants in the habitable volumes of the FGB to less than or equal to 0.15 milligrams per cubic meter for particles ranging from 1.0 microns to 300 microns in diameter shall be verified by analysis of the documentation of the particulate removal equipment in the FGB and by analyzing the location of the particulate removal equipment in the FGB’s ventilation system. On the basis of the results of this analysis a report shall be issued. Verification shall be considered successful if the atmosphere particulate level in the FGB can be maintained to less than or equal to 0.15 milligrams per cubic meter for particles ranging from 1.0 microns to 300 microns in diameter.

AGREED.

4.3.7.1.3.27 Provide remote internal visual access.

4.3.7.1.3.27.1 Transmit video signal.

The transmission of a video signal to allow internal visual access of station pressurized volumes to RS crew shall be verified by analysis. The verification shall be considered successful when the

analysis shows video display to allow internal visual access of FGB pressurized volumes to RS crew is possible.

AGREED.

4.3.7.1.3.27.2 Receive video signal.

The reception of a video signal to allow visual access of RS pressurized volumes shall be verified by inspection. The verification shall be considered successful when an inspection of flight drawings and data/reports from a test or demonstration showing video reception, distribution, and display to RS monitors shows RS pressurized volumes.

AGREED.

4.3.7.1.3.27.3 FGB video transmission.

Verification that the FGB shall provide for the line of sight transmission of video to the SM and the Russian Ground Segment during the approach and docking with the SM shall be accomplished by inspection of element level qualification records and SM RF video channel frequency compatibility analysis. The verification shall be considered successful if: the inspection records show that 1) the FGB will meet the required transmission performance while in line of sight of the Russian ground stations and within the design range of the SM; and 2) the analysis shows that the video channel frequency assignments are compatible with the SM.

4.3.7.1.3.28 Transmit voice communications.

4.3.7.1.3.28.1 Transmit hardwire.

FGB transmission of voice communications, loud annunciation, and caution and warning to the RS on–orbit element shall be verified by inspection. The verification shall be considered successful when the inspection of test results/reports and test flight drawings show that FGB transmission of voice communications, loud annunciation and caution and warning to the RS on–orbit element is successful. The characteristics of the transmission of voice communication, loud annunciation (paging), and caution and warning for the USOS shall be verified by inspection. The verification shall be considered successful when the inspection of test results/reports and test flight drawings show that transmission of voice communication, loud annunciation (paging), and caution and warning for the USOS meet the requirements of SSP 42121 paragraphs 3.2.1.5.1 and 3.2.2.5.1.

AGREED.

4.3.7.1.3.29 Receive voice communications.

4.3.7.1.3.29.1 Receive hardwire.

The verification shall be considered successful when analysis shows the FGB has the ability to: support internal voice communication reception from the USOS and the reception of internal voice communication between crew members in the RS on–orbit element; receive the voice communications from the USOS and from the RS on–orbit element; and provide uninterrupted transmission of a loud annunciation .(paging) signal and caution and warning signal from the PMA–1 to the SM. The hardwire communications at the FGB/USOS interface shall be verified using the applicable verification requirements as specified in SSP 42121, paragraph 4.3.2.2.5.1.

AGREED.

4.3.7.1.3.30 Support uplinked data.

4.3.7.1.3.30.1 Receive uplinked data.

a. An inspection shall be performed to verify that the FGB receives the data stream (commands and navigation) uplinked from the RS ground segment (From activation of the FGB through activation of the service module). The verification shall be considered successful when an inspection of tests/reports shows that the uplink coverage, bit error rate and data conversions of the RS received data stream (commands and navigation) uplinked from the RS ground meet the data stream user requirements.

b. An inspection shall be performed to verify that the FGB receives the data stream (commands and navigation) uplinked from the RS ground segment for emergency back–up purposes only (After activation of the service module through permanent human capability). The verification shall be considered successful when an inspection of tests/reports shows that the uplink coverage, bit error rate and data conversions of the RS received data stream (commands and navigation) uplinked from the RS ground meet the emergency back–up purposes.

AGREED.

4.3.7.1.3.30.2 Prepare uplinked data for on–board distribution.

Uplinked data format conversion for distribution on–board the space station shall be verified by analysis. The verification shall be considered successful when an analysis of tests/reports shows that the uplinked data can be converted and distributed to formats compatible with the on–orbit space station.

AGREED.

4.3.7.1.3.30.3 Distribute uplinked data.

Distribution of Uplinked Digital Data with other on–orbit Space Station segments shall be verified by analysis. An analysis, based on lower subsystems test data and interface test data, shall be considered successful when it is shown data can be distributed to the other on–orbit Space Station segments in accordance with SSP 42121 ICD and the Russian requirements. Distribution of Uplinked Digital Data within the FGB shall be considered successful when it is shown that data transmitted to the FGB can be distributed to other systems within the FGB.

AGREED.

4.3.7.1.3.31 Provide data for down link.

4.3.7.1.3.31.1 Prepare data for downlink.

The ability of the FGB to acquire analog and digital data (including telemetry data) for down link shall be verified by inspection. The verification shall be considered successful when an inspection of flight drawings and data/reports from a test or demonstration showing the ability of the FGB to acquire analog and digital data (including telemetry) from sources within the FGB and from interfaces with other Space Station segments.

AGREED.

4.3.7.1.3.31.2 Transmit data for down link.

a. An inspection shall be performed to verify that the FGB can transmit a data stream (commands and navigation) to the RGS (From activation of the FGB through activation of the

service module).The verification shall be considered successful when an inspection of test/report data shows that the down link coverage, bit error rate and data conversions of the RGS received data stream (commands and navigation) downlinked from the RS meet the data stream user requirements.

b. An inspection shall be performed to verify that the FGB can transmit a data stream (commands and navigation) to the RGS for emergency back–up purposes only (After activation of the service module through permanent human capability). An analysis shall also be performed to verify that the FGB can transmit ISS core digital data streams containing critical functions to the USGS relayed through the RGS. The verification shall be considered successful when an inspection of test/data shows that the down link coverage, bit error rate and data conversions of the RGS received data stream (commands and navigation) downlinked from the RS meet the emergency back–up purposes. The analysis must also show the capability of the RGS to receive critical ISS core digital data streams and relay them to the USGS.

AGREED.

4.3.7.1.3.32 Support internal equipment translation.

The FGB's ability to provide handles or structural or mechanical parts suitable for gripping and tethering equipment that requires moving in accordance with SSP 50094, paragraph 6.4.2 (SSP 50005, paragraph 11.6) shall be verified by inspection or analysis or demonstration. The inspection shall be based upon data collected by reviewing element assembly drawings and hardware drawings The analysis shall be based upon clearance studies. The demonstration shall be based upon data collected from hardware testing and human factors demonstrations performed on FGB development hardware or data supplied from flight experience where applicable. The inspection or analysis or demonstration shall be considered successful when it shows that the FGB provides handles or structural or mechanical parts suitable for gripping and tethering equipment that requires moving in accordance with SSP 50094, paragraph 6.4.2 (SSP 50005, paragraph 11.6).

AGREED.

4.3.7.1.3.33 Support internal equipment removal and replacement.

The FGB's ability to provide crew and equipment restraints capable of being located throughout the FGB pressurized habitable volume to support removal and replacement of ORUs and in situ maintenance shall be verified by inspection or analysis or demonstration. The inspection shall be based upon data collected by reviewing element assembly drawings and hardware layout drawings The analysis shall be based upon clearance studies. The demonstration shall be based upon data collected during subsystem hardware testing and implementation of human factors test plans or data supplied from flight experience where applicable. The inspection or analysis or demonstration shall be considered successful when analysis or the data shows that the FGB can provide crew and equipment restraints capable of being located throughout the FGB pressurized habitable volume to support removal and replacement of ORUs and in situ maintenance

AGREED.

4.3.7.1.3.34 Support internal equipment identification.

The FGB's ability to provide inventory labels on portable equipment and ORUs to maintain an on–orbit inventory to support logistics/resupply operations shall be verified by inspection and/or demonstration. The inspection shall be based upon data collected by reviewing hardware drawings and equipment lists. The demonstration shall be based upon data collected during

subsystem hardware testing and implementation of human factors test plans or data supplied from flight experience where applicable. The inspection and/or demonstration shall be considered successful when analysis of the data shows that the FGB can provide inventory labels on portable equipment and ORUs to maintain an on–orbit inventory to support logistics/resupply operations.

AGREED.

4.3.7.1.3.35 Support internal equipment restraint.

The FGB's ability to provide equipment restraints for every item that is not permanently attached to the FGB structure shall be verified by inspection and/or demonstration. The inspection shall be based upon data collected by reviewing element assembly drawings and restraint hardware layout drawings. The demonstration shall be based upon data collected during subsystem hardware testing and implementation of human factors test plans or data supplied from flight experience where applicable. The inspection and/or demonstration shall be considered successful when analysis of the data shows that the FGB can provide equipment restraints for every item that is not permanently attached to the FGB structure.

AGREED.

4.3.7.1.3.36 Execute maneuver guidance.

a. The FGB shall control the on–orbit Space Station invariant semimajor axis to within 2000 feet (3 sigma) of the targeted value at the end of the reboost maneuver. Verification of this requirement shall be done by analysis. Analysis shall be performed by the RSA, utilizing analytical tools, simulations and models of the ground and on–board hardware and software. The verification shall be considered successful when the analytic data shows that the RS can control the on–orbit Space Station invariant semimajor axis to within 2000 feet (3 sigma) of the targeted value at the end of the reboost maneuver.

b. The FGB shall be capable of controlling the on–orbit Space Station orbit by executing open loop maneuver sequences provided by RGS. Verification of this requirement shall be done by demonstration. The demonstration shall be performed using RS hardware and software models of on–board and ground systems. The verification shall be considered successful when the FGB is able to execute open loop maneuver sequences provided by RGS.

c. The FGB shall automatically dock with the SM. Verification of this requirement shall be done by demonstration. The demonstration shall be performed using RS hardware and software models as well as environmental models. The verification shall be considered successful when the FGB / SM docking can be accomplished.

AGREED.

4.3.7.1.3.37 Execute translation thrust.

a. From the activation of the Functional Cargo Block (FGB) until activation of the Service Module (SM) or until activation of the ICM in the FGB and FGB+Node 1 configurations [1A/R,2A]:

(1) The FGB shall be capable of executing a maneuver of up to 5 ft per sec within 90 minutes after receiving the RGS command data stream (flight assignment). Verification of this requirement shall be done by test. The test will be performed utilizing U.S. and Russian flight and ground software and hardware models. The verification shall be considered successful if the

RS receives maneuver commands from the RGS and completes the maneuver within the time constraint.

(2) The FGB shall have the capability to terminate a maneuver execution on command originating from RGS within 1.0 second of receipt of the command. Verification of this requirement shall be done by test. The test will be performed utilizing US and Russian flight software and hardware models. The verification shall be considered successful if the RS receive the terminate maneuver commands from RGS and process the commands within the 1.0 second time constraint.

(3) The FGB shall control translation maneuver initiation and termination times to within 1.0 second of the targeted values. Verification of this requirement shall be done by test. The test will be performed utilizing US and Russian flight software and hardware models. The verification shall be considered successful if the initiation and termination times meet the 1.0 second time constraint.

(4) The FGB shall have the capability to execute translational maneuvers per commands and other data originating from the RGS. Verification of this requirement shall be done by demonstration. The demonstration will be performed during Stage verification utilizing US and Russian flight software and hardware models. The verification shall be considered successful if the RS receives the translation commands from the RGS and executes the maneuver.

(5) The FGB propulsive effectors shall have a service life sufficient to complete the reboosts until SM activation. Verification of the FGB Propulsion System shall be performed by test. The test program shall be conducted in accordance with the test plan. For items previously verified for other spacecraft and will be used on the FGB, this data shall be included in the FGB verification review.

(6) The FGB shall be able to inhibit thrusters from firing when in contact with the Orbiter. Verification of this requirement shall be done by demonstration. The verification will show that the RS is able to discontinue attitude control when in contact with the Orbiter. Demonstration shall be performed utilize RS and Russian hardware models. The verification shall be considered successful when the demonstration shows that the RS is able to discontinue attitude control when in contact with the Orbiter.

(7) The FGB shall be designed to send propulsive effector data to the RGS. Verification of this requirement shall be done by demonstration. The demonstration will be performed during Stage verification with Russian flight and ground software and hardware models. The verification shall be considered successful if the RGS receives proper data from the RS.

(8) The FGB shall have the capability to determine total propellant levels (reserves) in the FGB tanks and report them to the RGS. Verification of this requirement shall be done by demonstration. The demonstration will be performed utilizing US and Russian flight software and hardware models. The verification shall be considered successful if the RGS receives proper data from the RS.

(9) The FGB propulsion system shall have performance as shown in Table VI–A. Verification of the FGB Propulsion System shall be performed by test. The test program shall be conducted in accordance with the test plan. For items previously verified for other spacecraft and will be used on the FGB, this data shall be included in the FGB verification review.

b. From activation of the SM:

(1) The FGB shall have capability to store 5700 kg of propellant. Verification of the FGB Propulsion System shall be performed by test. The test program shall be conducted in

accordance with the test plan. For items previously verified for other spacecraft and will be used on the FGB, this data shall be included in the FGB verification review.

(2) The FGB shall have the capability to determine total propellant levels (reserves) in the FGB tanks and report them to the SM systems. Verification of this requirement shall be done by demonstration. Demonstration will be performed during Stage verification using Russian flight software and hardware models. The verification shall be considered successful if the crew receives proper data from the RS.

(3) After docking with the SM, the FGB engines shall not be used. Verification of this requirement shall be done by demonstration. The demonstration will be performed utilizing RS flight software and hardware models. The verification shall be considered successful if the FGB engines are unable to fire after SM activation.

(4) The pressure and flowrate at the SM and FGB interface when fuel is supplied directly to CV thrusters will be defined by performing analysis and stand testing.

AGREED.

4.3.7.1.3.38 Control attitude – propulsive.

a. From the activation of the Functional Cargo Block (FGB) until activation of the Service Module (SM) [1A/R, 2A] or until activation of the ICM [2A.1]:

(1) The FGB shall control attitude rates to within +/– 1.50 degrees per second per axis when performing translational maneuvers. Verification of this requirement shall be done by analysis. The analysis shall ensure that the station shall be capable of controlling attitude rates to within +/– 1.50 degrees per second per axis when performing translational maneuvers. Analysis shall be performed utilizing analytical tools, simulations and models of the on–board hardware (including sensor errors, structural dynamics, mating alignment, and thermal deformation) and software. The verification shall be considered successful when the analysis data demonstrates that the RS can control the attitude rates to within +/– 1.50 degrees per second per axis.

(2) The FGB shall have the capability to control to LVLH and inertial attitudes using propulsive effectors. Verification of this requirement shall be done by demonstration. Demonstration shall be performed during Stage verification utilizing US and Russian flight software and hardware models. The verification shall be considered successful if the RS status data shows that RS propulsive control changes the attitude to LVLH and inertial.

(3) The FGB shall send attitude determination and attitude control system data to the RGS. Verification of this requirement shall be done by test. The test shall be performed during Stage verification utilizing US and Russian flight software and hardware models. The verification shall be considered successful if the RGS receives the required data from the FGB.

(4) The FGB shall execute attitude control per commands and other data originating from the RGS. Verification of this requirement shall be done by demonstration. Demonstration shall be performed utilizing US and Russian flight software and hardware models. The verification shall be considered successful if the RS receives and processes the commands from the RGS.

(5) The FGB shall provide dynamic stability to perform berthing with the Orbiter at an altitude of 278 kilometers (150 nautical miles) or above. Verification of this requirement shall be done by analysis. The analysis shall ensure that the station shall be capable of providing sufficient dynamic stability to perform berthing with the Orbiter at an altitude of 278 kilometers (150

nautical miles) or above. Analytical tools and simulations of the integrated RS/USOS segment shall be used for the analysis. The verification shall be considered successful when the analysis data demonstrates that the RS can provide dynamic stability to perform berthing with the Orbiter and other external vehicles at altitudes specified in the requirement.

(6) The FGB shall provide attitude control capability during all phases of Orbiter and SM approach and departure operations, and the capability to return to the desired attitude after completion of Orbiter undocking operations. Verification of this requirement shall be done by analysis. The analysis shall ensure that the FGB shall be capable of providing sufficient dynamic stability to perform docking and undocking with the Orbiter and docking with the SM. Analytical tools and simulations of the integrated RS/USOS segment shall be used for the analysis. The verification shall be considered successful when the analysis data demonstrates that the FGB can provide attitude control capability to perform docking and undocking with the Orbiter and SM.

(7) The FGB shall maintain its attitude and attitude rate in the LVLH frame with an accuracy of +/– 1.5 degrees and a +/– 0.1 degrees per second angular rate. Verification of this requirement shall be done by analysis. The analysis shall ensure that the station shall be capable of stabilizing the attitude to within +/–1.5 degrees per axis per orbit and +/–0.1 degree per second rate. Analysis shall be performed by the RSA, utilizing analytical tools, simulations and models of the ground and on–board hardware (including sensor errors, structural dynamics, mating alignment, and thermal deformation) and software. Analytical tools which are capable of providing integrated RS/ISS flex and rigid body analysis shall be used. The verification shall be considered successful when the data demonstrates that the RS/ISS structural interaction, thermal deformations, mechanical misalignments and structural dynamics are held within tolerance of +/– 1.5 degrees per axis per orbit and an angular rate of +/–0.1 degrees per second with respect to LVLH or inertial.

(8) The FGB shall be able to discontinue attitude control after grappling with the Orbiter independent of USGS or RGS. Verification of this requirement shall be done by demonstration. The verification will show that the RS is able to discontinue attitude control after grappling with the Orbiter independent of USGS and RGS. Demonstration shall be performed utilize RS and Russian hardware models. The verification shall be considered successful when the demonstration shows that the RS is able to discontinue attitude control after grappling with the Orbiter independent of USGS and RGS.

(9) The FGB shall provide an indication to the Orbiter crew, within 5 seconds after receiving the signal to disable attitude control, that the FGB attitude control system has been disabled in accordance with SSP 42421, appendix C. Verification shall be done by demonstration. Verification shall be considered successful when demonstration proves that the FGB can provide an indication to the Orbiter when attitude control is disabled.

(10) The FGB shall provide the capability to disable the attitude control system by the RGS when the FGB is in the region of radio control. Verification shall be done by demonstration. Verification shall be considered successful when demonstration proves that the RGS can disable the FGB attitude control function.

(11) The FGB shall be able to maintain attitude and attitude rate of the Space Station to an accuracy of 1 degree +/– 10.0 degree per axis and +/– 0.1 degrees per second per LVLH axis to support Orbiter grappling. Verification of this requirement shall be done by analysis. Analytical tools which are capable of providing integrated RS/ISS flex and rigid body analysis shall be used. The verification shall be considered successful when the data demonstrates that the attitude and angular rates are within the limits specified.

(12) Verification of this requirement shall be by test. Verification shall be considered successful when the FGB reactivates its attitude control system within 2.5 seconds after receiving an Orbiter departure indication from the USOS.

(13) Verification of this requirement shall be by test. Verification shall be considered successful when the FGB removes the inhibits of thruster firing following a RGS sourced time delay.

(14) Verification of this requirement shall be by test. Verification shall be considered successful when the FGB time delay initiates upon receipt of an Orbiter departure indication and the time delay value matches that transmitted from the RGS.

(15) Verification of this requirement shall be by test. Verification shall be considered successful when an indication of the mode of the attitude control system is reported to the USOS within 6.0 seconds of the change.

(16) The FGB Attitude Control System's contribution to the peak to peak angular motion (dynamic error range) shall be within 4.0 degrees peak to peak per axis after Orbiter departure. Verification of this requirement shall be done by analysis. The verification shall be considered successful when the data demonstrates that while the ISS is under the effects of Orbiter plume disturbances, the FGB attitude control system's contribution to the peak to peak angular motion is within 4.0 degrees peak to peak per axis.

(17) The FGB Attitude Control System shall maintain angular rate of the FGB body axes relative to the true LVLH coordinates to within 0.1 degrees per second per axis after a failed Orbiter docking and back away. Verification of this requirement shall be done by analysis. The verification shall be considered successful when the data demonstrates that, while the ISS is under the effects of Orbiter plume disturbances, the FGB attitude control system can maintain the angular rate of the FGB body axes relative to the true LVLH coordinates to within 0.1 degrees per second per axis.

b. From activation of the SM:

(1) The FGB shall be designed to send propulsion system data to the RGS and SM. Verification of this requirement shall be done by demonstration. The demonstration will be performed during Stage verification with Russian flight and ground software and hardware models. The verification shall be considered successful if the RGS receives proper data from the RS.

(2) After docking with the SM, the FGB engines shall not be used. Verification of this requirement shall be done by demonstration. The demonstration will be performed utilizing RS flight software and hardware models. The verification shall be considered successful if the FGB engines are unable to fire after SM activation.

AGREED.

4.3.7.1.3.38.1 Control Attitude Propulsively in the configuration indicated in Table XVIII

a(1)a. Verification shall be considered successful when analysis shows that the FGB maintains the attitude knowledge of the FGB reference frame relative to the true LVLH coordinates to within 1.5 degrees per axis during Orbiter docking operations.

a(1)b. Verification shall be considered successful when analysis shows that the FGB Motion Control System's contribution to the peak to peak angular motion is within +/–1.0 degrees per axis during Orbiter approach and station–keeping to install the ICM or the SM.

a(1)c. Verification shall be considered successful when analysis shows that maintains angular rate of the ISS body axes relative to the true LVLH coordinates to within 0.04 degrees per second per axis during Orbiter approach and station–keeping to install the ICM or the SM.

a(2). Verification shall be considered successful when analysis shows that the FGB maintains orientation for rendezvous of the Orbiter delivering the ICM or SM for two orbits.

a(3). Verification shall be considered successful when demonstration proves that the FGB algorithms are capable of discontinuing attitude control after receipt of the capture signal from the standard docking mechanism.

a(4). Verification shall be considered successful when demonstration proves that the FGB is capable of disabling attitude control thrusters within 5 seconds after capture of the ICM or SM.

a(5). Verification shall be considered successful when demonstration proves that the FGB provides an indication to the Orbiter crew after receiving the signal to disable the attitude control thrusters, that the FGB attitude control thrusters have been disabled.

a(6). Verification shall be considered successful when the demonstration proves that the FGB can activate its attitude control system on command from the RGS.

b(1). Verification shall be considered successful when the analysis shows that the FGB can maintain the orientation of the ISS for docking with the Progress.

b(2). Verification shall be considered successful when the demonstration shows that the FGB ceases to control angular attitude as specified herein.

b(3). Not applicable.

c(1). Verification shall be considered successful when the analysis shows that the FGB can maintain the orientation of the ISS as specified herein.

c(2). Verification shall be considered successful when the demonstration shows that the FGB can orient the ISS as specified herein.

c(3). Verification shall be considered successful when the analysis shows that the FGB can orient the ISS with respect to the specified attitude as specified herein.

c(4). Verification shall be considered successful when the analysis shows that the FGB can orient the ISS with respect to the specified attitude as specified herein.

c(5). Verification shall be considered successful when the demonstration shows that the FGB can receive and process the attitude control commands from the RGS.

c(6). Verification shall be considered successful when the analysis shows that the FGB can maintain the ISS attitude as specified herein.

c(7). Verification shall be considered successful when the analysis shows that the FGB can maintain the ISS attitude as specified herein.

d(1). Verification shall be considered successful when the demonstration shows that the FGB can activate thruster operations as specified herein.

d(2). Verification shall be considered successful when the demonstration shows that the FGB reactivates its attitude control system within 2.5 seconds as specified herein.

d(3). Verification shall be considered successful when the demonstration shows that the FGB can send MCS status data to the USOS as specified herein.

d(4). Verification shall be considered successful when demonstration shows that the FGB provides an attitude control mode indication to the USOS as specified herein.

d(5&6). Verification shall be considered successful when the demonstration shows that the FGB removes the inhibits of thruster firing following a RGS sourced time delay as specified herein.

AGREED.

4.3.7.1.3.38.2 Indicate Status of Motion Control System.

Verification of this requirement shall be by demonstration. Verification shall be considered successful when an indication of the mode of the attitude control system is reported to the USOS within 6.0 seconds of the change.

AGREED.

4.3.7.1.3.39 Limit accelerations.

The FGB capability to limit accelerations in the microgravity mode shall be verified for frequencies through 10.0 Hz by analysis through the integrated system simulation models, and for frequencies above 10.0 Hz through 300 Hz by tests. The vibratory models shall determine the acceleration response at the structural mounting interfaces of the internal user payload locations to mechanical FGB disturbances with frequencies through 10 Hz. The simulation models and disturbance inputs shall themselves be validated to the maximum extent possible by test correlation. For frequencies above 10.0 Hz through 300 Hz, tests shall determine the acceleration response at the RS/USOS interface to mechanical and acoustic FGB disturbances. The verification process shall adhere to the analysis and test methods and verification criteria as specified in the Russian Microgravity Control Plan. The verification shall be considered successful when the analyses show that the FGB will meet the specified acceleration performance levels when exposed to the operational conditions consistent with microgravity mode.

AGREED.

4.3.7.1.3.40 Light FGB.

4.3.7.1.3.40.1 Control internal lighting.

The FGB's ability to control internal lighting levels shall be verified by inspection and demonstration. Verification shall be considered successful when inspection of drawings and demonstrations show that the FGB will control internal lighting levels and utilize light fixtures that have their own control. The FGB will provide centralized lighting control for each compartment translation path and locate lighting controls at entrances and exits of habitable areas.

AGREED.

4.3.7.1.3.40.2 Illuminate internal areas.

The FGB's ability to illuminate crew living areas, passageways, and interior crew work stations in support of general tasks, conduct of experiments, emergency egress, and maintenance shall be

verified by inspection and demonstration. Verification shall be considered successful when demonstration of the FGB capability to illuminate passageways and interior crew work stations is per Table XIX. The inspection of drawings shall also indicate that the maintenance worksites are illuminated with portable lights.

AGREED.

4.3.7.1.3.41 Support housekeeping.

a. The FGB's ability to support routine cleaning and trash collection and removal shall be verified by analysis. The analysis shall be based upon data collected from the review of system hardware designs and equipment and supplies available. The analysis shall be considered successful when analysis of the data shows that the FGB is able to support routine cleaning and trash collection and removal.

b. The FGB's ability to provide capture volumes for airborne particles that are accessible for replacement or cleaning without dispersion of the trapped materials shall be verified by analysis. The analysis shall be based upon data collected by reviewing component drawing and maintenance procedures. The analysis shall be considered successful when analysis of the data shows that the FGB is able to provide capture volumes for airborne particles that are accessible for replacement or cleaning without dispersion of the trapped materials.

c. The FGB's ability to provide facilities for collection and isolation of trash and its removal from the FGB for ultimate disposal shall be verified by analysis. The analysis shall be based upon data collected by reviewing drawings, hardware quantities and distribution of on–orbit hardware. The analysis shall be considered successful when analysis of the data shows that the FGB is able to provide facilities for collection and isolation of trash and its removal from the FGB for ultimate disposal.

AGREED.

4.3.7.1.3.42 Store internal equipment.

The FGB's ability to provide storage volume to store spare internal ORUs, tools, diagnostic equipment, and maintenance supplies shall be verified by analysis. The analysis shall be based upon data provided through drawings and lists of hardware dimensions and stowage requirements. The analysis shall be considered successful when the analysis shows that the FGB can provide storage volume to store spare internal ORUs, tools, diagnostic equipment, and maintenance supplies.

AGREED.

4.3.7.1.3.43 Support orbital replacement unit repair.

The FGB's ability to support limited repair of selected ORUs shall be verified as follows:

a. Verification shall be considered successful when it is shown by analysis that the FGB is designed to permit on–orbit maintenance.

b. For FGB on–orbit maintenance – verification shall be considered successful when shown by analysis that the on–orbit return of the FGB to an operational condition can be achieved primarily through the removal and replacement of ORU's.

c. For in–situ maintenance – the FGB hardware that is not designated as ORU removal and replaceable shall be analyzed for in–situ repair and or maintenance.

d. For maintenance coordination – verification shall be considered successful when the analysis shows that the FGB hardware is designed to utilize the ISS coordinated maintenance equipment, tools, and materials.

AGREED.

4.3.7.1.3.44 Provide automated collision avoidance maneuvers.

The capability for the FGB to execute automated collision avoidance maneuvers to provide safe trajectories if an abort is initiated by onboard software or RGS shall be verified by analysis. The analysis shall consider the methods and their alternatives for initiating the different types of aborts and their regions of applicability, including the necessary implementation timeline. The verification shall be considered successful if the analysis shows that: the timeline is sufficient for selection, initiation, and execution of the appropriate abort procedure; and when executed, the automated abort procedures result in an abort maneuver sequence and subsequent trajectories that avoids a collision with the SM.

AGREED.

4.3.7.1.3.45 Provide docking status.

Verification that the FGB docking mechanisms provides an indication of the docking status to the ISSA and the Russian ground segment during vehicle (Soyuz, Progress, SM, SM Orbiter assisted, and ICM) docking operations shall be accomplished by inspection of design documents and lower level qualification records and a demonstration. The inspection shall confirm the capability of docking mechanisms to meet the requirements as specified herein. The verification shall be considered successful if the records show successful compliance with tests performed on the FEU and the interface to the RS data system and successful completion of a demonstration showing the docking status presented to the ISSA crew and RS ground using simulated docking status signals.

AGREED.

4.3.7.1.3.46 FGB relative navigation support.

Verification that the FGB accommodates cooperative navigation systems for other Russian vehicles to perform rendezvous with the FGB shall be accomplished by inspection and analysis. The inspection shall show that the detailed design, integration, and operation plan for the FGB based equipment is provided to support the proposed rendezvous and docking operations. An analysis of the omni and docking antenna patterns shall be performed to assess support coverage. The verification shall be considered successful if the inspection of the detailed design, integration, and operation plan for the cooperative navigation systems support the proposed rendezvous and docking operations and the analysis data shows the antenna coverage (including consideration of blockage and interference periods is adequate to support both successful and retry rendezvous and docking attempts).

AGREED.

4.3.7.1.3.47 FGB video transmission.

No verification is required for ground and flight hardware and software functions which have been demonstrated in previous Russian programs. All of the flight equipment and ground systems needed for this capability meet this criteria.

AGREED.

4.3.7.1.3.48 Automatic power reduction.

The FGB's ability to perform automatic power reduction (load shedding) with the Node 1 shall be verified by test. Verification shall be considered successful when the test shows that when the FGB detects a low voltage condition and is not able to meet its power commitments to the USOS, the FGB issues a power reduction command to the USOS Node 1 MDM in accordance with SSP 50097.

AGREED.

4.3.7.1.3.49 Communication with US Airlock Orlan suits.

Verification shall be by inspection of drawings. Verification shall be considered successful when the inspection shows that the FGB can accommodate the Orlan communications cable in accordance with SSP 42121, Appendix I, section 3.2.1.1.

AGREED.

4.3.7.2 Service module.

4.3.7.2.1 Purpose.

Verification requirements not applicable.

4.3.7.2.2 Description.

Verification requirements not applicable.

4.3.7.2.3 Capabilities.

4.3.7.2.3.1 Control total pressure.

4.3.7.2.3.1.1 Monitor total pressure.

The capability of the SM to monitor the atmospheric total pressure over a range of 0.02 to 19.4 psia (1 to 1000 mm Hg) with an accuracy of +/– 0.58 psi (30 mm Hg) shall be verified by analysis. The analysis shall be based on a test of the total pressure sensor. The requirement verification will be considered successful when the analysis proves that the total pressure sensor can monitor the total pressure over a range of 0.02 to 19.4 psia (1 to 1000 mm Hg) with an accuracy of +/– 0.58 psi (30 mm Hg) when integrated into the SM.

AGREED.

4.3.7.2.3.2 Control oxygen partial pressure.

4.3.7.2.3.2.1 Monitor oxygen partial pressure.

The capability of the SM to monitor the oxygen partial pressure over a range of 0 to 5.8 psia (0 to 300 mm Hg) with an accuracy of +/– 0.23 psia (12 mm Hg) for the range of 0 to 3.9 psia (0 to 200 mm Hg) and an accuracy of +/– 0.33 psia (17 mm Hg) for the range of 3.9 to 5.8 psia (200 to 300 mm Hg) shall be verified by analysis. The analysis shall be based on a test of the oxygen partial pressure sensor. The requirement verification will be considered successful when the analysis proves that the oxygen partial pressure sensor can monitor the oxygen partial pressure over a range of 0 to 5.8 psia (0 to 300 mm Hg) with an accuracy of +/– 0.23 psia (12 mm Hg) for the range of 0 to 3.9 psia (0 to 200 mm Hg) and an accuracy of +/– 0.33 psia (17 mm Hg) for the range of 3.9 to 5.8 psia (200 to 300 mm Hg) when integrated into the SM.

AGREED.

4.3.7.2.3.2.2 Introduce oxygen.

The capability of the SM to introduce oxygen shall be verified by analysis. An integrated analysis shall be performed using component test data from the oxygen introduction system to verify that the SM will introduce oxygen to specified limits for three crew members nominally and for six crewmembers during crew transfer operations and that it will control the station's oxygen partial pressure between 2.83 and 3.35 psia (146 to 178 mm Hg)with a maximum oxygen concentration of 24.8%. The integrated analysis shall address the availability of the necessary water/oxygen generation medium, intermodule ventilation, power and data resources. The requirement verification is considered successful when the analysis proves that the SM will introduces oxygen into the atmosphere to support the metabolic needs of 1.89 lb. per person per day (0.86 kg per person per day) for three crew members nominally and for six crew members during crew transfer operations and it can control the oxygen partial pressure between 2.83 and 3.35 psia (146 to 178 mm Hg)with a maximum oxygen concentration of 24.8%.

AGREED.

4.3.7.2.3.3 Reserved.

4.3.7.2.3.4 Equalize pressure.

The capability of the SM to equalize pressure shall be verified by analysis. An analysis shall be performed using qualification data to verify that the SM will equalize pressure to the specified limits. The analysis shall determine the maximum time to equalize pressure. The requirement verification is considered successful when the analysis proves that the SM will equalize the pressure differential between adjacent isolated volumes up to 1766 cubic feet (50 cubic meters) at 15.0 psia (775 mm Hg) and 14.3 (740 mm Hg) to less than 0.01 psid (0.5 mm Hg) within 3 minutes.

AGREED.

4.3.7.2.3.5 Control atmosphere temperature.

4.3.7.2.3.5.1 Monitor atmosphere temperature.

The capability to monitor the atmospheric temperature within the habitable volume of the SM within the range 60 to 90 degrees F (15.5 to 32.2 degrees C) with an accuracy of +/– 1 degree F (0.5 degree C) shall be verified by analysis of the documentation of the data handling system, and analysis of the temperature sensor test data. On the basis of the results of this analysis a final report shall be issued. Verification shall be considered successful if the SM can monitor the temperature in the habitable volume of the SM within the range of 60 to 90 degrees F (15.5 to 32.2 degrees C) with an accuracy of +/– 1 degrees F (0.5 degree C).

AGREED.

4.3.7.2.3.5.2 Remove atmosphere heat.

The capability of the thermal control system of the SM to maintain the temperature of the atmosphere in the habitable volume of the SM within the range of 64 to 82 degrees F (18 to 28 degrees C) with the stabilized temperature within the range of +/– 3 degrees F (1.5 degrees C) of the selected temperature shall be verified by analysis of the design documentation, the results of an analytical model of the SM, the results of testing the thermal control system of the SM, and the results of operating similar flight articles under similar operating conditions. On the basis of the results of this analysis a final report shall be issued. Verification shall be considered to be

successful if the thermal control system of the SM can maintain the atmosphere temperature in the habitable volume of the SM within the range of 64 to 82 degrees F (18 to 28 degrees C) with the stabilized temperature within the range of +/– 3 degrees F (1.5 degrees C) of the selected temperature.

AGREED.

4.3.7.2.3.6 Control atmospheric moisture.

4.3.7.2.3.6.1 Remove excess moisture from the cabin atmosphere.

The SM's capability to maintain the relative humidity in the RS modules within the range of 30 to 70 % and the dew point within the range of 40 to 60 degrees F (4.4 to 15.6 degrees C) shall be verified by analysis of the schematics of the intermodule ventilation, the results of the moisture level calculations and the results of testing the assemblies controlling atmospheric moisture removal. On the basis of the results of the analysis a final report shall be issued. Verification is considered successful if the SM can maintain the relative humidity in the RS modules within the range of 30 to 70 % and the dew point within the range of 40 to 60 degrees F (4.4 to 15.6 degrees C).

AGREED.

4.3.7.2.3.6.2 Dispose of removed moisture.

The capability of the SM to transfer on average 3.3 lb. per person per day (1.5 kg per person per day) of condensate to the potable water processor shall be verified by analysis and inspection of the flight article drawings. The analysis shall look at qualification data or flight data from similar flight articles to show that the condensate can be transferred at the specified rate to the potable water processor. The requirement verification will be considered successful when the analysis and the inspection of the flight article drawings proves that the SM can transfer 3.3 lb. per person per day (1.5 kg per person per day) to the potable water processor.

AGREED.

4.3.7.2.3.6.3 Monitor humidity.

The capability of the SM to monitor the humidity levels over a range of 0.00 to 0.58 psia (0 to 30 mm Hg) with an accuracy of +/–0.03 psia (1.6 mm Hg) for the range of 0 to 16 mm Hg (0 to 0.31 psia) and an accuracy of +/– 3.0 mm Hg (0.06 psia) for the range of 16 to 30 mm Hg (0.31 to 0.58 psia) shall be verified by analysis. The analysis shall be based on a test of the water vapor pressure sensor. The requirement verification will be considered successful when the analysis proves that the SM can monitor the humidity levels pressure over a range of 0.00 to 0.58 psia (0 to 30 mm Hg) with an accuracy of +/ 0.031 psia (1.6 mm Hg) for the range of 0 to 16 mm Hg (0 to 0.31 psia) and an accuracy of +/– 3.0 mm Hg (0.06 psia) for the range of 16 to 30 mm Hg (0.31 to 0.58 psia) when the water vapor pressure sensor is integrated into the SM.

AGREED.

4.3.7.2.3.7 Circulate atmosphere.

4.3.7.2.3.7.1 Circulate atmosphere intra–module.

The capability to circulate the atmosphere in the habitable volumes of the SM within the range of 10 to 40 feet per minute (0.05 to 0.2 meter per second) shall be verified by analysis of the

ventilation schematics of the SM and the results of the ventilation testing of the habitable volumes of the SM flight article or a similar module. On the basis of the results of this analysis a final report shall be issued. Verification shall be considered successful if the circulation of the atmosphere in the habitable volumes of the SM is shown to be maintained within the range of 10 to 40 feet per minute (0.05 to 0.2 meter per second).

AGREED.

4.3.7.2.3.7.2 Circulate atmosphere inter–module.

The capability of the SM to circulate intermodule atmosphere shall be verified by analysis of the intermodule ventilation schematics of the RS modules and the results of the ventilation testing of the components and equipment performing this function. On the basis of the results of this analysis a final report shall be issued. Verification shall be considered successful if the SM can circulate intermodule atmosphere with adjacent pressurized volumes and with the USOS at a rate of 127 to 148 cubic feet per minute (60 to 70 liters per second).

AGREED.

4.3.7.2.3.8 Light station.

4.3.7.2.3.8.1 Control internal lighting.

The SM's ability to control internal lighting levels shall be verified by inspection and demonstration. Verification shall be considered successful when inspection of drawings and demonstration show that the SM will control internal lighting levels and utilize light fixture that have their own control. The SM will provide lighting control for each compartment translation paths and locate lighting controls at each exit.

AGREED.

4.3.7.2.3.8.2 Accommodate on SM a source of light (navigation light) for Shuttle Star Tra

a. Verification shall be by test and analysis. Verification shall be considered successful when the test and analysis show that the SM provides the interfaces to the navigation light as specified in protocol No. 9–035/97.

b. Verification shall be by inspection of drawings. Verification shall be considered successful when inspection of drawings shows that the navigation light is boresighted as specified herein.

c. Verification shall be by inspection of drawings. Verification shall be considered successful when it is shown that 60 degree field of view is provided with or without the presence of the Soyuz or Progress vehicles.

4.3.7.2.3.8.3 Illuminate internal area.

The SM's ability to illuminate crew living areas, passageways, and interior crew work stations in support of general tasks, conduct of experiments, emergency egress, and maintenance shall be verified by inspection, or analysis or demonstration. The inspection or analysis shall be based on data from element assembly level drawings, and lighting hardware drawings and specifications. The demonstration shall be based upon data collected from SM development hardware, or from previous flight experience. The inspection or analysis or demonstration shall be considered successful when analysis of data shows that the SM illuminates crew living areas, passageways, and interior crew workstations in support of general tasks, conduct of experiments, emergency egress, and maintenance to illumination levels as shown in Table I, measured by testing.

AGREED.

4.3.7.2.3.9 Isolate to recovery level.

Failure isolation and recovery from loss of SM functions, as specified in 3.7.2.3.9, shall be verified by analysis plus selected demonstrations on Russian equipment to check software in accordance with the method for evaluating credible off–nominal situations. The list of analysis and demonstration data id identified in 4.3.2.1.1.1.4.1.

AGREED.

4.3.7.2.3.10 Recover lost function.

Failure isolation and recovery, from loss of SM functions, as specified in 3.7.2.3.10, shall be verified by analysis plus selected demonstrations on Russian equipment to check software in accordance with the method for evaluating credible off–nominal situations. The list of analysis and demonstration data is identified in 4.3.2.1.1.1.4.1.

AGREED.

4.3.7.2.3.11 Safe.

Failure isolation or safing of identified hazardous conditions in the SM as specified in 3.7.2.3.11, shall be verified by analysis in accordance with the method for evaluating credible off–nominal situations. The list of analysis data is identified in 4.3.2.1.1.1.4.1.

AGREED.

4.3.7.2.3.12 Maintain station mode.

a. The SM ability to maintain station modes as specified in 3.7.2.3.12, shall be verified by demonstration in accordance with the onboard systems control mode table. The list of demonstration data is identified in 4.3.2.1.1.1.5.1.

b. Automatic moding of the SM ACS shall be verified by analysis. The verification shall be considered successful when the analysis shows that the SM ACS is moded to free drift within 5.0 seconds of receipt of an Orbiter capture indication from the USOS in accordance with SSP 50097.

c. Automatic moding of the SM ACS shall be verified by analysis. The verification shall be considered successful when the analysis shows that the following conditions have been met:

(1.) The SM ACS is moded to active control within 5.0 seconds of receipt of an Orbiter departure indication from the USOS in accordance with SSP 50097.

(2.) The SM ACS control mode indication is provided to the USOS in accordance with SSP 50097 within 2.1 seconds of mode change.

d. The capability of the SM to issue power reduction requests to the U.S. Node 1 MDM shall be verified by test. Verification shall be considered successful when the SM receives an indication of a low voltage condition within the FGB electrical power system and issues power reduction requests to the U.S. Node 1 MDM as specified.

e. The capability of the SM to accept commands from the U.S. C&C MDM to perform automatic power reduction (load shedding) shall be verified by test. Verification shall be considered successful when the SM reduces consumption of USOS–provided power after receiving a command to load shed from the U.S. C&C MDM as specified.

AGREED.

4.3.7.2.3.13 Transition station modes.

The SM ability to transition station modes as specified in 3.7.2.3.13, shall be verified by demonstration in accordance with the onboard systems control mode table. The list of demonstration data is identified 4.3.2.1.1.1.5.1.

AGREED.

4.3.7.2.3.14 Provide data to crew.

The SM ability to provide data to the crew as specified in 3.7.2.3.14 shall be verified by demonstration in accordance with the crew data provision table. The list of demonstration data is identified in 4.3.2.1.1.1.6.1.

The capability for the SM to report Class 1, 2, and 3 C&W events detected within the SM to the USOS within 2.85 seconds from confirmation of the detected event shall be verified by analysis. This analysis will be considered successful when lower level verification of the SM components indicates that the total time required to report Class 1, 2, and 3 C&W events detected within the SM to the USOS does not exceed 2.85 seconds from confirmation of the detected event.

The capability for the SM to pass through Class 1, 2, and 3 C&W events to the USOS within a latency of 1.6 seconds measured from receipt by SM of the C&W event notification from the FGB, the LSM, the DC, the UDM, the SPP, and the RMs shall be verified by analysis.

Note: This 1.6 seconds is a part of the overall latency from confirmation of the event to receipt of the event by the USOS and does not include the latency in these modules from confirmation of the event to transmission to the SM.

This analysis will be considered successful when lower level verification of the SM components indicates that the total time required to report Class 1, 2, and 3 C&W events, received from the FGB, the LSM, the DC, the UDM, the SPP, and the RMs, to the USOS does not exceed a latency of 1.6 seconds.

The capability for the SM to provide visual and aural annunciation of Class 1, 2, and 3 C&W events to the crew within 1.2 seconds from receipt of the C&W event visual and aural annunciation notification from the USOS shall be verified by analysis. This analysis will be considered successful when lower level verification of the SM components indicates that the total time required to provide visual and aural annunciation of Class 1, 2, and 3 C&W events does not exceed 1.2 seconds from receipt of the C&W event visual and aural annunciation notification from the USOS.

AGREED.

4.3.7.2.3.15 Accept crew inputs and commands.

The SM ability to accept crew inputs and commands as specified in 3.7.2.3.15 shall be verified by demonstration in accordance with the crew data provision table. The list of demonstration data is identified in 4.3.2.1.1.1.6.1 and 4.3.2.1.1.1.6.2.

AGREED

4.3.7.2.3.16 Acquire function status data.

The SM ability to acquire function status data as specified in 3.7.2.3.16 shall be verified by analysis in accordance with the onboard status verification tables. The list of analysis data is identified in 4.3.2.1.1.1.7.1.

AGREED

4.3.7.2.3.17 Assess function status data.

The SM ability to assess function status data as specified in 3.7.2.3.17 shall be verified by analysis in accordance with the onboard status verification tables. See 4.3.2.1.1.1.7.2 for how status data is assessed.

AGREED.

4.3.7.2.3.18 Respond to fire.

The SM's ability to provide Portable Breathing Apparatuses and Portable Fire Extinguishers shall be verified by inspection. An inspection of the SM drawings shall be performed to verify that the SM has Portable Breathing Apparatuses and Portable Fire Extinguishers. The verification shall be considered successful when the inspection of the SM drawings shows that the SM has Portable Breathing Apparatuses and Portable Fire Extinguishers.

AGREED.

4.3.7.2.3.18.1 Detect fire event.

The SM's ability to detect a fire event shall be verified by analysis and inspection. An analysis shall be performed to determine if the fire protection selection criteria has been met in each location within the SM in accordance with the requirements in Figure 4. An inspection of the drawings shall be performed to verify that the detection and visual indication hardware will be located in the SM in accordance with the requirements in Figure 4. An inspection of the SM's Caution and Warning drawings and/or software documentation shall be performed to verify that a Class 1 fire alarm can be activated for a detected event location. The verification shall be considered successful when:

(1) The analysis determines that all locations in the SM have been evaluated in accordance with the requirements in Figure 4;

(2) When the inspection of the SM drawings and/or documents have shown that the SM can activate a Class 1 fire alarm for a detected fire event; and

(3) All detection and visual indication hardware have been located in the SM in accordance with the requirements in Figure 4.

AGREED.

4.3.7.2.3.18.2 Isolate fire control zone.

The SM's capability to isolate a fire control zone shall be verified by analysis. An analysis shall be performed to determine that:

(1) The SM can remove power and forced airflow at the affected location, as determined by the selection criteria in Figure 4, within 30 seconds; and

(2) That the SM can prevent airflow between modules within 30 seconds of the annunciation of a Class 1 fire alarm.

The verification shall be considered successful when the analysis shows that:

(1) The SM can remove power and forced airflow at the affected location, as determined by the selection criteria in Figure 4, within 30 seconds; and

(2) That the SM can prevent airflow between modules within 30 seconds of the annunciation of a Class 1 fire alarm.

AGREED.

4.3.7.2.3.18.3 Extinguish fire.

The SM's ability to extinguish a fire shall be verified by analysis. An analysis shall be performed to determine that the SM can eliminate a fire within one minute of suppressant discharge. The verification shall be considered successful when the analysis shows that the SM can eliminate a fire within one minute of suppressant discharge.

AGREED.

4.3.7.2.3.18.4 Recover from fire.

The SM's capability to recover from a fire shall be verified by analysis. An analysis shall be performed to verify that the SM's atmosphere can be restored below the levels in Table V. The verification shall be considered successful when the analysis shows that the atmosphere can be restored below the levels given in Table V.

AGREED.

4.3.7.2.3.19 Respond to decompression.

4.3.7.2.3.19.1 Detect rapid decompression.

The capability of the SM to detect a decompression shall be verified by analysis. An integrated analysis shall be performed using qualification data from the pressure sensors to verify that the SM will detect a rapid decompression per the specified requirements. The requirement verification is considered successful when the integrated analysis proves that the SM can detect a rapid decompression of 1.0 psi per hour (52 mm Hg per hour).

The capability of the SM to activate a Class I alarm for a RS detected decompression or based on notification of a decompression event from the USOS shall be verified by analysis. An integrated analysis shall be performed using qualification data from the RS modules to verify that the SM will activate a Class I alarm when the RS has detected a rapid decompression or based on notification of a decompression event from the USOS. The verification shall be considered successful when the integrated analysis proves that the SM can activate a Class I alarm for a RS detected decompression or based on notification of a decompression event from the USOS in accordance SSP 50097, paragraph 3.4.1.1.1.

4.3.7.2.3.19.2 Isolate rapid decompression.

The SM capability to isolate the RS during a depressurization event shall be verified by analysis. An analysis shall be performed to determine that within 60 seconds of annunciation of a Class 1 depressurization alarm:

1. The SM can prevent forced air circulation in and between modules;

2. That the SM can stop oxygen introduction from the water electrolysis unit;

3. That the SM can close all external vents; and

4. That the SM can activate the RS depressurization airflow sensor assemblies.

The verification shall be considered successful when the analysis shows that within 60 seconds of annunciation of a Class 1 depressurization alarm:

1. The SM can prevent forced air circulation in and between modules;

2. That the SM can stop oxygen introduction from the water electrolysis unit;

3. That the SM can close all external vents; and

4. That the SM can activate the RS depressurization airflow sensor assemblies.

4.3.7.2.3.20 Respond to hazardous atmosphere.

The RS's ability to provide a 15 minute supply or portable emergency breathing capability per crew member shall be verified by analysis. The analysis shall be based upon data collected by reviewing PBA hardware specifications. The analysis shall be considered successful when the analysis shows that the RS is able to provide a 15 minute supply or portable emergency capability per crew member.

AGREED.

4.3.7.2.3.21 Maintain thermal conditioning.

The SM's thermal control system's ability to collect thermal energy from heat generating equipment (3.7.2.3.21.1), to transmit it (3.7.2.3.21.2) and dispose of it into the ambient environment (3.7.2.3.21.3) shall be verified by evaluation of computational results, results of independent thermal tests of its components, and results of testing of similar ground and/or flight systems. The results of this evaluation will be documented in a final report.

The verification will be considered successful when the thermal control system is shown to be capable of assuring the required thermal conditioning of the SM components.

AGREED.

4.3.7.2.3.21.1 Collect Thermal energy (see 4.3.7.2.3.21).

4.3.7.2.3.21.2 Transmit Thermal energy (see 4.3.7.2.3.21).

4.3.7.2.3.21.3 Dispose of Thermal energy (see 4.3.7.2.3.21).

4.3.7.2.3.22 Provide Crew Control Interface.

The SM ability to provide the capability for crew interactive control of On–orbit ISS critical systems, caution and warning messages, and integrated plan functions using a portable U.S.

laptop computer by providing two computer receptacles located in the SM shall be verified by demonstration of electrical signal characteristics between the receptacle and the USOS.

AGREED.

4.3.7.2.3.23 Distribute time.

The SM ability to distribute time as specified in 3.7.2.3.23 shall be verified by analysis in accordance with the time distribution table. The list of analysis data is identified in 4.3.2.1.1.1.11.1.

AGREED.

4.3.7.2.3.24 Accommodate crew hygiene and wastes.

a. The RS's ability to provide facilities for personal hygiene and collection, processing and disposal of crew metabolic waste shall be verified by inspection, analysis, or demonstration. The inspection or analysis shall be based upon data collected by reviewing element assembly level configuration drawings and component specifications. The demonstration shall be based upon data collected from flight experience. The inspection shall be considered successful when analysis of the data shows that the RS provides facilities for personal hygiene and collection, processing, and disposal of crew metabolic waste.

b. The RS's ability to accommodate collection, treatment, and disposal of menstrual discharge and associated absorbent material shall be verified by inspection or analysis or demonstration. The inspection or analysis shall be based upon data collected by reviewing end item hardware specifications and system waste processing capability. The demonstration shall be based upon data collected from flight experience. The inspection shall be considered successful when analysis of the data shows that the RS is able to accommodate collection, treatment, and disposal of menstrual discharge and associated absorbent material.

c. The RS's ability to accommodate the collection, containment, and disposal of emesis shall be verified by inspection or analysis or demonstration. The inspection or analysis shall be based upon data collected from system hardware drawings and specifications. The demonstration shall be based upon data collected from past flight experience. The inspection or analysis or demonstration shall be considered successful when analysis of the data shows that the RS is able to accommodate the collection, containment, and disposal of emesis.

d. The RS's ability to accommodate internal disposal of external collected crew wastes shall be verified by inspection or analysis or demonstration. The inspection or analysis shall be based upon data collected from system hardware drawings and specifications. The demonstration shall be based on data from past flight experience. The inspection or analysis or demonstration shall be considered successful when analysis of the data shows that the RS is able to accommodate internal disposal of external collected crew wastes.

e. The RS's ability to support the crew member during post external cleanup shall be verified by inspection or analysis or demonstration. The inspection or analysis shall be based upon data collected during the review of system level drawings, specifications and supplies available. The demonstration shall be based on data from past flight experience. The inspection or analysis or demonstration shall be considered successful when analysis of the data shows that crew hygiene accommodations support the crew member during post external cleanup.

f. The RS's ability to accommodate the collection of crew fecal solids, liquids, gases, particulates, and the disposal of associated consumable materials shall be verified by inspection

or analysis or demonstration. The inspection or analysis shall be based upon data collected from system hardware drawings and specifications. The demonstration shall be based upon data collected from past flight experience. The inspection or analysis or demonstration shall be considered successful when analysis of the data shows that the RS accommodates the collection of crew fecal solids, liquids, gases, particulates, and the disposal of associated consumable materials.

g. The RS's ability to accommodate the collection of urine and associated consumable material shall be verified by inspection or analysis or demonstration. The inspection shall be based on data collected from hardware drawings. The analysis shall be based on review of system specification data. The demonstration shall be based upon data collected from flight experience. The inspection or analysis or demonstration shall be considered successful when data shows that the RS accommodates the collection of urine and associated consumable material.

h. The RS's ability to accommodate personal grooming for crew skin care, shaving, hair grooming, and nail trimming shall be verified by inspection or demonstration. The inspection shall be based on data collected from hardware drawings and specifications. The demonstration shall be based upon data collected from flight experience. The inspection or demonstration shall be considered successful when data shows that the RS accommodates personal grooming for crew skin care, shaving, hair grooming, and nail trimming.

i. The RS's ability to accommodate collection, processing, and disposal of crew hygiene wastes, including soap, expectorants, hair, nail trimmings, and hygiene water shall be verified by inspection or analysis or demonstration. The inspection shall be based on data collected from hardware drawings. The analysis shall be based on review of system specification data. The demonstration shall be based upon data collected from flight experience. The inspection or analysis or demonstration shall be considered successful when data shows that the RS accommodates collection, processing, and disposal of crew hygiene wastes, including soap, expectorants, hair, nail trimmings, and hygiene water.

j. The RS's ability to accommodate whole body skin and hair cleansing shall be verified by inspection or analysis or demonstration. The inspection shall be based on data collected from hardware drawings. The analysis shall be based on review of system specification data. The demonstration shall be based upon data collected from flight experience. The inspection or analysis or demonstration shall be considered successful when data shows that the RS accommodates whole body skin and hair cleansing.

AGREED.

4.3.7.2.3.25 Support radiation exposure monitoring.

The ability to support monitoring of the crew's exposure to radiation in accordance with SSP 50065 (CHeCS to RS ICD) shall be verified by analysis. The analysis will utilize layout drawings and resource requirements per the ICD. The verification will be considered successful when it is determined that the proper equipment and resources are available as specified in the ICD to support monitoring of the crew's exposure to radiation

AGREED.

4.3.7.2.3.26 Accommodate crew privacy.

a. The RS's ability to provide the crew members with a private and personal space capable of light and sound isolation in order to support crew rest, sleep and personal activities shall be verified by inspection. The inspection shall be based upon data collected by reviewing element

assembly and system level layout and configuration drawings. The inspection shall be considered successful when analysis of the data shows that the RS is able to provide the crew members with a private and personal space capable of light and sound isolation in order to support crew rest, sleep and personal activities.

b. The RS's ability to provide crew privacy for donning and doffing of clothing shall be verified by inspection. The inspection shall be based upon data collected by reviewing crew privacy accommodations, hardware drawings and specifications. The inspection shall be considered successful when analysis of the data shows that the RS is able to provide crew privacy for donning and doffing of clothing.

AGREED.

4.3.7.2.3.27 Support crew personal items.

The RS's ability to provide storage volume for crew equipment and consumables shall be verified by analysis. The analysis shall be based upon data collected by reviewing storage allocations, hardware drawings and specifications. The analysis shall be considered successful when review of the data shows that the RS provides storage volume for crew equipment and consumables.

AGREED.

4.3.7.2.3.28 Support housekeeping.

a. The RS's ability to support routine cleaning and trash collection and removal in pressurized compartments shall be verified by analysis. The analysis shall be based upon data collected from the review of system hardware designs and equipment and supplies available. The analysis shall be considered successful when analysis of the data shows that the RS is able to support routine cleaning and trash collection and removal in pressurized compartments.

b. The RS's ability to provide capture volumes for airborne particles that are accessible for replacement or cleaning without dispersion of the trapped materials shall be verified by analysis. The analysis shall be based upon data collected by reviewing component drawing and maintenance procedures. The analysis shall be considered successful when analysis of the data shows that the RS is able to provide capture volumes for airborne particles that are accessible for replacement or cleaning without dispersion of the trapped materials.

c. The RS's ability to provide facilities for collection and isolation of trash distributed throughout the pressurized volumes shall be verified by analysis. The analysis shall be based upon data collected by reviewing drawings, hardware quantities and distribution of on–orbit hardware. The analysis shall be considered successful when analysis of the data shows that the RS is able to provide facilities for collection and isolation of trash distributed throughout the pressurized volumes.

d. The RS's ability to isolate, contain, and store collected trash for ultimate disposal shall be verified by analysis. The analysis shall be based upon data collected by reviewing drawings, hardware quantities and distribution of on–orbit hardware. The analysis shall be considered successful when analysis of the data shows that the RS is able to isolate, contain, and store collected trash for ultimate disposal.

e. The RS's ability to support microbial monitoring shall be verified by analysis. The verification will be considered successful when it is determined that the proper equipment and resources are available to support microbial monitoring.

AGREED.

4.3.7.2.3.29 Support crew health.

The health care interfaces required shall be verified by analysis. The analysis shall be based on end item qualification test results, operation analysis, and inspection of element drawings. Verification shall be considered successful if the data shows compliance with the requirements as specified in SSP 50065 ICD.

AGREED.

4.3.7.2.3.29.1 Monitor crew health.

The health care interfaces requirement shall be verified by analysis. The analysis shall be based on end item qualification test results, operation analysis, and inspection of element drawings. Verification shall be considered successful if the data shows compliance with the requirements of SSP 50065, CHeCS to RS ICD.

AGREED.

4.3.7.2.3.29.2 Respond to crew illness or injury.

The translation path provision shall be verified by inspection of the Russian Segment top assembly drawings. Verification shall be considered successful if the inspection shows that the SM design includes an unobstructed translation path at least 610 mm (24 inch) in diameter.

AGREED.

4.3.7.2.3.29.3 Provide preventive crew health care.

The health care interfaces requirement shall be verified by analysis. The analysis shall be based on end item qualification test results, operation analysis, and inspection of element drawings. Verification shall be considered successful if the data shows compliance with the requirements of SSP 50065, CHeCS to RS ICD.

AGREED.

4.3.7.2.3.29.4 Support microgravity countermeasures and exercise.

The health care interfaces requirement shall be verified by analysis. The analysis shall be based on end item qualification test results, operation analysis, and inspection of element drawings. Verification shall be considered successful if the data shows compliance with the requirements of SSP 50065, CHeCS to RS ICD.

AGREED.

4.3.7.2.3.30 Support food and water consumption and cleanup.

a. The RS shall provide the capability for food consumption and cleanup in accordance with SSP 50094, paragraph 6.3.3. The RS's ability to provide the capability for food consumption and cleanup in accordance with SSP 50094, paragraph 6.3.3 shall be verified by inspection or analysis. The inspection shall be based upon data from drawings. The inspection or analysis shall be considered successful when analysis of the data shows that the RS shall provide the capability for food consumption and cleanup in accordance with SSP 50094, paragraph 6.3.3.

b. The RS's ability to provide ambient potable water and heated potable water shall be verified by inspection. The inspection shall be based upon data collected during the operation of

development hardware and acceptance of flight hardware. The inspection shall be considered successful when analysis of the data shows that the RS is able to provide ambient potable water and heated potable water.

AGREED.

4.3.7.2.3.31 Support food processing.

a. The RS's ability to provide refrigerated and ambient storage volume shall be verified by inspection. The inspection shall be based upon data collected by reviewing storage volume hardware capacity and allocations. The inspection shall be considered successful when analysis of the data shows that the RS provides ambient storage volume.

b. The RS's ability to provide food storage for a minimum of one week located in the area where food is processed and consumed shall be verified by inspection. The inspection shall be based upon data collected by reviewing element layouts and stowage allocations. The inspection shall be considered successful when analysis of the data shows that the RS is able to provide food storage for a minimum of one week located in the area where food is processed and consumed.

c. The RS's ability to provide the capability to rehydrate food shall be verified by inspection or analysis or demonstration. The inspection or analysis or demonstration shall be based upon data collected during the operation of development hardware and acceptance of flight hardware. The verification shall be considered successful when the analysis, inspection, or demonstration shows that the RS is able to provide the capability to rehydrate food.

d. The RS's ability to heat food and liquids shall be verified by inspection or analysis or demonstration. The inspection or analysis or demonstration shall be based upon data collected during the operation of development hardware and acceptance of flight hardware. The verification shall be considered successful when the analysis, inspection or demonstration shows that the RS provides the capability to heat food and liquids.

AGREED.

4.3.7.2.3.32 Provide food.

The SM's ability to provide food in accordance with the nutritional requirements in SSP 50094 shall be verified by analysis. The analysis shall utilize nutritional data as specified in SSP 50094 in comparison with flight manifests and content list of Russian nutritional provisions. Verification will be considered successful when it is determined that the proper food is provided to ensure the nutritional requirements specified in SSP 50094 are met.

AGREED.

4.3.7.2.3.33 Support internal crew restraint and mobility.

a. The RS's ability to support internal crew translation through pressurized volumes shall be verified by inspection. The inspection shall be based upon data collected by reviewing element assembly drawings and restraint and translation aids layout drawings. The inspection shall be considered successful when analysis of the data shows that the RS supports internal crew translation through pressurized volumes.

b. The RS's ability to incorporate handholds and handrails into the interior of the pressurized volumes to facilitate the crew's mobility and stability shall be verified by inspection. The

inspection shall be based upon data collected by reviewing element assembly drawings and handhold and handrail layout drawings. The inspection shall be considered successful when analysis of the data shows that handholds and handrails are incorporated into the interior of the pressurized volumes to facilitate the crew's mobility and stability.

c. Restraints and mobility aids shall be designed in accordance with the following requirements:

(1). The RS's ability to provide fixed or portable inside vehicular activity mobility aids shall be provided as follows:

A. Around workstations, access hatches, doors, windows, and pressure hatches.

B. At designated terminal points and direction change points on established crew translation paths.

C. For inside EVA suited operations.

D. Located where the crew member is protected from identified hazard.

E. Orientation and location to be consistent with the crew tasks they are supporting.

All shall be verified by inspection. The inspection shall be based upon data collected by reviewing element assembly drawings and restraint hardware layout drawings. The inspection shall be considered successful when analysis of the data shows that the RS is able to provide fixed or portable inside vehicular activity mobility aids located in the areas identified above.

(2). The RS's ability to provide inside vehicular activity crew restraints at the following locations:

A. At identified locations where crew members are expected to exert forces which cause the body to move in reaction.

B. At crew stations.

All shall be verified by inspection. The inspection shall be based upon data collected by reviewing element assembly drawings and restraint hardware layout drawings. The inspection shall be considered successful when analysis of the data shows that the RS is able to provide inside vehicular activity crew restraints located in the areas identified above.

(3). The RS's inside vehicular activity personnel restraints ability to comply with the following requirements:

A. Restraint design shall eliminate muscular tension.

B. The personnel restraint system shall be capable of on–orbit cleaning and repair.

C. All fixed and portable internal vehicle handholds and handrails shall be designed to an ultimate load of 445 N (100 lbf) applied in any direction without failure or damage.

D. Items restrained with hook and loop fasteners shall be equipped with the hook type fastener and the restraining surface shall be equipped with the loop type fastener.

All shall be verified by inspection and/or demonstration. The inspection shall be based upon data collected by reviewing element assembly drawings and restraint hardware layout drawings.

The demonstration shall be based upon data collected during simulated weightless environment testing and maintenance procedure review or upon data collected from flight experience. The inspection and/or demonstration shall be considered successful when analysis of the data shows that the RS's inside vehicular activity personnel restraints comply with the requirements stated above.

(4). The RS's inside vehicular activity fixed and portable foot restraints ability to meet the following requirements:

A. All foot restraints shall maintain foot position to allow the crew member a complete range of motion (roll, pitch, and yaw).

B. Inside vehicular activity foot restraints and covers shall allow ventilation to the feet.

C. The foot restraint shall be capable of being removed for replacement/repair.

D. Foot restraints shall be designed to withstand a tension load of 445 N (100 lbf) as a minimum. Foot restraints shall withstand a torsion load of 100 Nm (75 lbf) as a minimum with the torsion vector parallel to the floor.

All shall be verified by inspection and/or demonstration. The inspection shall be based upon data collected by reviewing element assembly drawings and restraint hardware layout drawings. The demonstration shall be based upon data collected during simulated weightless environment testing and maintenance procedure review or upon data collected from flight experience. The inspection and/or demonstration shall be considered successful when analysis of the data shows that the RS's inside vehicular activity fixed and portable foot restraints comply with the requirements stated above.

(5). The RS's inside vehicle mobility paths' ability to meet the following requirements:

A. The minimum cross sectional dimensions of microgravity translation paths for one crew member in light clothing shall be 65 cm.

B. A minimum interior cross section dimension of 80 cm shall be maintained to support translation.

C. Equipment exposed to the translation path shall be designed to withstand a design load of 556 N (125 lbf) and a minimum ultimate load of 778 N (175 lbf).

D. Non–structural closures shall be capable of sustaining crew–imposed minimum design load of 556 N (125 lbf) and a minimum ultimate load of 778 N (175 lbf).

All shall be verified by inspection and/or demonstration. The inspection shall be based upon data collected by reviewing element assembly drawings and restraint hardware layout drawings. The demonstration shall be based upon data collected during simulated weightless environment testing and maintenance procedure review or upon data collected from flight experience. The inspection and/or demonstration shall be considered successful when analysis of the data shows that the RS's inside vehicular mobility paths comply with the requirements stated above.

AGREED.

4.3.7.2.3.34 Control carbon dioxide.

4.3.7.2.3.34.1 Remove carbon dioxide.

The capability of the SM to control carbon dioxide shall be verified by analysis. An integrated analysis shall be performed using qualification data from the carbon dioxide removal device to

verify that the SM will control carbon dioxide to specified limits. The integrated analysis shall address the effects of intermodule ventilation (as well as IMV short–circuiting) on carbon dioxide partial pressure levels. The requirement verification will be considered successful when the integrated analysis proves that the SM will: (1) control the carbon dioxide partial pressure in the atmosphere pressurized volumes to a maximum crew daily average of 0.10 psia (5.3 mm Hg); (2) control peaks levels to less than 0.147 psia (7.6 mm Hg); (3) remove 2.2 lb. per person/day (1 kg per person per day) to support human metabolic needs for three crew members nominally and six crew members during crew transfer operations and (4) monitor atmospheric carbon dioxide levels over a range of 0 to 0.48 psia (0 to 25 mm Hg) with an accuracy of +/– 0.038 psia (2 mm Hg).

AGREED.

4.3.7.2.3.34.2 Dispose of carbon dioxide.

The capability of the SM to dispose of waste carbon dioxide shall be verified by inspection. The inspection shall include the review of SM's flight article drawings to prove that the SM can dispose of the waste carbon dioxide. The requirement verification shall be considered successful when the inspection proves that the SM can dispose of the waste carbon dioxide.

4.3.7.2.3.35 Control gaseous contaminants.

4.3.7.2.3.35.1 Remove gaseous contaminants.

a. The capability of the SM to control gaseous contaminants in the habitable atmosphere shall be verified by analysis. An integrated analysis shall be conducted based upon RS modules qualification test data, on–ground outgassing tests, or atmosphere sample data taken during MIR–1 configuration. Verification is considered successful when the results of the analyses of the levels are at or below the values listed in Table VI.

b. The SM air monitoring interfaces requirement shall be verified by analysis. The analysis shall be based on end item qualification test results, operation analysis, and inspection of element drawings. Verification shall be considered successful if the data shows compliance with the requirements as specified in SSP 50065, CHeCS to RS ICD.

AGREED.

4.3.7.2.3.35.2 Dispose of gaseous contaminants.

The capability of the SM to dispose of gaseous contaminants shall be verified by inspection. The inspection shall include the review of SM's flight article drawings to prove that the SM can dispose of the gaseous contaminants by venting and/or by replacing expendables. The requirement verification shall be considered successful when the inspection proves that the SM can dispose of the gaseous contaminants.

AGREED.

4.3.7.2.3.36 Control airborne particulate contaminants.

4.3.7.2.3.36.1 Remove airborne particulate contaminants.

The capability to remove airborne particulate contaminants in the habitable volumes of the SM to less than or equal to 0.15 milligrams per cubic meter for particles ranging from 0.5 microns to 300 microns in diameter shall be verified by analysis of the documentation of the particulate

removal equipment in the SM and by analyzing the location of the particulate removal equipment in the SM's ventilation system. On the basis of the results of this analysis a final report shall be issued. Verification shall be considered successful if the atmosphere particulate level in the SM can be maintained to less than or equal to 0.15 milligrams per cubic meter for particles ranging from 0.5 microns to 300 microns in diameter.

AGREED.

4.3.7.2.3.37 Control airborne microbial growth.

4.3.7.2.3.37.1 Remove airborne microbes.

The capability of the SM to control airborne microbial growth shall be verified by analysis. An integrated analysis shall be performed using qualification data from the filters to verify that the SM will limit the airborne microbial growth below the specified levels. The integrated analysis shall address the effects of intermodule ventilation on the control of airborne microbes. The requirement verification is considered successful when the integrated analysis proves that the RS will limit the daily average airborne microbes in the SM atmosphere to less than or equal to the daily average of 1000 CFU per cubic meter.

AGREED.

4.3.7.2.3.38 Provide water for crew use.

4.3.7.2.3.38.1 Supply water for potable use.

The capability of the SM to provide water for potable use shall be verified by analysis. An analysis shall be performed using ground and flight data from the potable water processor and from the stored water system to verify that the SM can provide water for crew use at the specified rates. The analysis shall address the RS water mass balance and additionally it shall verify the capability to store and distribute water for crew use. The verification shall be considered successful when the analysis proves that the SM will provide water for 6 crew members and will provide an average of 5.5 lbm person/day (2.5 kg/person/day) of water, including an average of 1.1 lbm/person/day (0.5 kg/person/day) of water in the food, for food rehydration, consumption, and oral hygiene for six crewmembers.

AGREED.

4.3.7.2.3.38.2 Supply water for hygiene use.

The capability of the SM to provide 1.1 lbm/person/day (0.5 kg/person/day) of hygiene water for crew use for prior to activation of the the LSM for three crewmembers shall be verified by analysis. An analysis shall be performed to verify that the SM can provide 1.1 lbm/person/day (0.5 kg/person/day) of hygiene water for three crewmembers prior to activation of the LSM. This verification shall be considered successful when the analysis shows that the SM can provide 1.1 lbm/person/day (0.5 kg/person/day) of hygiene water for crew usage for three crewmembers prior to activation of the LSM.

The capability of the SM and LSM to provide 1.1 lbm/person/day (0.5 kg/person/day) of hygiene water for crew use after activation of the the LSM for up to six crewmembers shall be verified by analysis. An analysis shall be performed to verify that the SM and LSM can provide 1.1 lbm/person/day (0.5 kg/person/day) of hygiene water for crew usage after activation of the LSM for up to six crewmembers. This verification shall be considered successful when the analysis shows that the SM and LSM can provide 1.1 lbm/person/day (0.5 kg/person/day) of hygiene water for crew usage after activation of the LSM for up to six crewmembers.

AGREED.

4.3.7.2.3.38.3 Waste water management.

The capability of the SM to manage condensate water shall be verified by analysis of ground and flight data. An analysis shall be performed to verify that the SM can collect the condensate and process it into potable water. This verification shall be considered successful when the analysis shows that the SM can collect condensate and process it into potable water.

The capability of the SM to collect and dispose of urine prior to the activation of the Life Support Module shall be verified by analysis. An analysis shall be performed to verify that the SM can collect and dispose of an average of 1.2 kg/person/day (2.64 lbm/person/day) of urine. This verification shall be considered successful when the analysis shows that the SM can collect and dispose of an average of 1.2 kg/person/day (2.64 lbm/person/day) of urine.

AGREED.

4.3.7.2.3.38.4 Monitor water quality.

a. The capability of the SM to provide water that meets the water quality requirements that are as specified in Table VI–A shall be verified by analysis. An analysis shall be performed using ground and flight data from the SM water processors and the stored water system to verify that the SM will provide water as specified in the water quality requirements. The verification shall be considered successful when the analysis proves that the RS will provide water of potable quality and hygiene quality as specified in Table VI–A.

b. The SM water monitoring interfaces requirement shall be verified by analysis. The analysis shall be based on end item qualification test result, operation analysis, and inspection of element drawings. Verification shall be considered successful if the data shows compliance with the requirements as specified in SSP 50065, CHeCS to RS ICD.

AGREED.

4.3.7.2.3.39 Provide direct visual access.

The RS shall provide external direct visual access from station interior to station exterior to the crew for recreational and scientific purposes. The RS's ability to provide external direct visual access from station interior to station exterior to the crew for recreational and scientific purposes shall be verified by analysis. The analysis shall be based upon data collected by reviewing direct viewing window locations. The analysis shall be considered successful when the analysis shows that the RS can provide external direct visual access from station interior to station exterior to the crew for recreational and scientific purposes.

AGREED.

4.3.7.2.3.40 Provide remote internal visual access.

4.3.7.2.3.40.1 Create video signal.

The SM's ability to create a video signal in SECAM D, K format to allow internal visual access of station pressurized volume to crew and RS ground shall be verified by inspection. The verification shall be considered successful when inspection of tests/reports show that the RS video signals conform to SECAM D, K format.

AGREED.

4.3.7.2.3.41 Transmit voice commands.

4.3.7.2.3.41.1 Transmit hardwire.

SM transmission of voice communications, loud annunciation, and caution and warning to the RS on–orbit element shall be verified by inspection. The verification shall be considered successful when the inspection of test results/reports and test flight drawings show that SM transmission of voice communications, loud annunciation and caution and warning to the RS on–orbit element is successful. The characteristics of the transmission of voice communication and loud annunciation (paging) for the USOS shall be verified by inspection. The verification shall be considered successful when the inspection of test results/reports and test flight drawings show that transmission of voice communication and loud annunciation (paging) for the USOS meet the requirements of SSP 42121, paragraphs, 3.2.1.5.1 and 3.2.2.5.1.

AGREED.

4.3.7.2.3.42 Receive voice communications.

4.3.7.2.3.42.1 Receive hardwire.

SM reception of voice communications, loud annunciation, and caution and warning from the RS on–orbit element shall be verified by inspection. The verification shall be considered successful when the inspection of test results/reports and test flight drawings show that SM reception of voice communications, loud annunciation and caution and warning from the RS on–orbit element is successful. The characteristics of the reception of voice communication and loud annunciation (paging) from the USOS shall be verified by inspection. The verification shall be considered successful when the inspection of test results/reports and test flight drawings show that reception of voice communication and loud annunciation (paging) from the USOS meet the requirements of SSP 42121, paragraphs, 3.2.1.5.1 and 3.2.2.5.1.

AGREED.

4.3.7.2.3.43 Determine state vector and attitude.

From activation of the SM:
The SM shall determine the on orbit Space Station position, velocity, attitude, and attitude rate knowledge to support attitude control, translation control, and pointing of RS systems. Verification of this requirement shall be done by demonstration. The demonstration shall be performed by the RSA using RS flight or equivalent computers and software. The verification shall be considered successful if the demonstration proves that the SM can determine the position, velocity, attitude, and attitude rate data.

AGREED.

4.3.7.2.3.43.1 Provide State vector and attitude.

From activation of the USOS MDMs in US lab:

a. The SM shall provide the USOS with position, velocity, attitude, and attitude rate data at a rate of 1 Hz. Verification of this requirement shall be done by test. The test shall be performed using RS and US flight or equivalent computers and software. The verification shall be considered successful if the test proves that the SM can provide the USOS with position, velocity, attitude, and attitude rate data at a rate of 1 Hz. This test done in USA.

b. The SM shall provide the USOS with position and velocity translational data with a position accuracy of at least 2953 feet (900 meters) (3 sigma root sum square error), and with a

semi–major axis accuracy of 984 feet (300 meters) (3 sigma). Verification of this requirement shall be done by analysis. Analysis shall be performed by the RSA, utilizing analytical tools, simulations and models of the ground and onboard hardware and software. The verification shall be considered successful if the analysis proves that the SM can provide the USOS with position data with an accuracy of 2953 feet (900 meters) (3 sigma root sum square error), and with a semi–major axis accuracy of 984 feet (300 meters) (3 sigma).

c. Reserved.

d. The SM shall provide the USOS with attitude of the Space Station Analysis Coordinate System with respect to the J2000 and LVLH reference frames, with an accuracy of 0.5 degree (3 sigma for each of three axes) for all operational attitudes of the Space Station. Verification of this requirement shall be done by analysis. Analysis shall be performed by the RSA. The verification shall be considered successful if the analysis proves that the SM can provide the USOS with attitude of the Space Station Analysis Coordinate System with respect to the J2000 and LVLH reference frames with an accuracy of 0.5 degree (3 sigma for each of the three axis).

e. The SM shall provide the USOS with the inertial attitude rate of the ISS, in the Space Station Analysis Coordinate System reference frame, with an accuracy of 0.01 degree per second (3 sigma for each of three axes). Verification of this requirement shall be done by analysis. Analysis shall be performed by the RSA, utilizing analytical tools, simulations and models of the ground and on–board hardware and software. The verification shall be considered successful if the analysis proves that the SM can provide the USOS with the inertial attitude rate of the ISS, in the Space Station Analysis Coordinate System reference frame, with an accuracy of 0.01 degree per sec (3 sigma for each of the three axis).

f. The SM shall correct for the angular misalignment between the SM reference frame and the Space Station Analysis Coordinate System, which are in accordance with SSP 50094, section 12. Verification of this requirement shall be done by test. The test shall be performed by the RSA using RS and U.S. flight or equivalent computers and software. The verification shall be considered successful if the test proves that the SM can correct for the angular misalignment between the SM reference frame and the Space Station Analysis Coordinate System.

AGREED.

4.3.7.2.3.43.2 Generate pointing and support data.

From activation of the USOS MDMs in US Lab:

The capability of the SM to provide the USOS the identifiers of payloads (or robotics subsystem components) and positions of their centers of mass (in accordance with SSP 50097) shall be verified by analysis and test. Integrated hardware (computer and data bus) and software tests will be performed to verify the data transfer to the USOS. The verification shall be considered successful when the integrated hardware and software tests shows the data transfer to the USOS is in accordance with SSP 50097.

AGREED.

4.3.7.2.3.44 Maintain attitude – nonpropulsive.

a. From activation of the RS nonpropulsive effectors :

(1) The SM shall be able to maintain a TEA using only nonpropulsive effectors. Verification of this requirement shall be done by demonstration. The demonstration shall be performed by the

RSA to ensure that the RS can maintain a TEA using only nonpropulsive effectors. The verification shall be considered successful if the demonstration proves that the SM can maintain a TEA using only nonpropulsive effectors.

(2) The SM shall be able to maintain LVLH and inertial attitudes using only nonpropulsive effectors. (This requirement does not size the nonpropulsive effectors and depends on available momentum storage). Verification of this requirement shall be done by demonstration. The demonstration shall be performed by the Russian Segment to ensure that the RS can maintain LVLH and inertial attitudes using only nonpropulsive effectors. The verification shall be considered successful if the demonstration proves that the SM can maintain LVLH and inertial attitudes using only nonpropulsive effectors.

(3) The SM shall monitor the nonpropulsive effector's momentum state relative to saturation levels and provide notification to the RGS and crew of excessive momentum levels during nonpropulsive attitude control. Verification of this requirement shall be done by demonstration. The demonstration will verify that the RS will send notification of excessive momentum levels to the RGS and crew during nonpropulsive attitude control. The verification shall be considered successful if the RGS and crew receive notification of excessive momentum levels from the RS.

4) The SM shall maintain attitude stability to 5.0 degrees per axis per orbit (total attitude variation in any single orbit interval of time) when controlling to TEA. Verification of this requirement shall be done by analysis. Analysis shall be performed by the RSA, utilizing analytical tools, simulations and models of the ground and onboard hardware and software. Analytical tools which are capable of providing simulations of the quasi–steady dynamic environment (low frequencies such as gravity gradient, on–orbit induced rotation and aerodynamics), the structural dynamics, and station time domain will be used for the analysis. The verification shall be considered successful when the data demonstrates that the SM can maintain attitude stability to 5.0 degrees per axis per orbit (total attitude variation in any single orbit interval of time) when controlling to TEA.

(5) The SM shall maintain attitude in the SM frame within +/– 3 degrees per axis of the commanded attitude when controlling to a LVLH or inertial attitude with nonpropulsive effectors. Verification of this requirement shall be done by analysis. Analysis shall be performed by the RSA, utilizing analytical tools, simulations and models of the ground and onboard hardware and software. Analytical tools which are capable of providing simulations of the quasi–steady dynamic environment (low frequencies such as gravity gradient, on–orbit induced rotation and aerodynamics), the structural dynamics, and station time domain will be used for the analysis. The verification shall be considered successful when the data demonstrates that the SM can maintain attitude within +/– 3.0 degrees per axis of the commanded LVLH or inertial attitude during nonpropulsive attitude control.

(6) The SM shall maintain the attitude rates to within +/– .015 degrees per second per axis when controlling with nonpropulsive effectors. Verification of this requirement shall be done by analysis. Analysis shall be performed by the RSA, utilizing analytical tools, simulations and models of the ground and on–board hardware (including sensor errors, structural dynamics, mating alignment, and thermal deformation) and software. Analysis utilizing analytical tools which are capable of providing the quasi–steady dynamic environment (low frequencies such as gravity gradient, on–orbit induced rotation and aerodynamics), the structural dynamics (due to flexible vibration modes) sources of acceleration disturbances, and station time domain and the integrated RS/ISS flex and rigid body analysis. The verification shall be considered successful when the analysis shows that the SM can control attitude rates to within +/– 0.015 degrees per second per axis when controlling with nonpropulsive effectors.

(7) The SM shall execute attitude control commands originating from the RGS or crew when using nonpropulsive effectors. Verification of this requirement shall be done by demonstration. The demonstration shall be performed utilizing US and Russian flight software and hardware models. The verification shall be considered successful if the SM receives, validate and process the RGS or crew commands during attitude control with nonpropulsive effectors.

(8) The SM shall notify the RGS and crew of failure to converge to the commanded attitude. Verification of this requirement shall be done by test. The test will verify that the RS will send notification of failure to converge to the commanded attitude to the RGS and crew during nonpropulsive attitude control. The verification shall be considered successful if the RGS and crew receive notification of failure to converge to the commanded attitude from the SM.

(9) The SM shall have the capability to accept constant inertial, LVLH and Analysis Coordinate Frame angular momentum commands from the RGS or crew. The achieved angular momentum variation shall be less than 250 ft–lb–sec/axis peak to peak in any 10 orbit period relative to the command. The angular momentum variation accuracy shall be verified by analysis including thermal and bending flexure error sources. Integrated hardware and software tests shall be performed to verify the capability to accept the angular momentum command. The verification shall be considered in compliance when the accuracy is consistent with the requirement and the command availability has been demonstrated.

(10) The SM shall maintain Space Station attitude within +/– 15 degrees in yaw and roll, +15 to –20 degrees in pitch with respect to (0, 0, 0) yaw, pitch, and roll orientation in the LVLH reference frame to meet thermal constraints and power generation requirements. Verification of this requirement shall be done by analysis. Analytical tools which are capable of providing simulations of the quasi–steady dynamic environment (low frequencies such as gravity gradient, on–orbit induced rotation and aerodynamics), the structural dynamics (due to flexible vibration modes) sources of acceleration disturbances, and station time domain shall be used for the analysis. The verification shall be considered successful when the data demonstrates that the SM can maintain attitude within +/– 15 degrees in yaw and roll, +15 to –20 degrees in pitch with respect to (0, 0, 0) yaw, pitch, and roll orientation in the LVLH reference frame.

(11) When mated with the Orbiter, the SM shall maintain Space Station attitude within +/– 15 degrees in roll and yaw, + 25 to 0 degrees in pitch with respect to (0,0,0) yaw, pitch, and roll orientation in the LVLH reference frame. Verification of this requirement shall be done by analysis. Analytical tools which are capable of providing simulations of the quasi–steady dynamic environment (low frequencies such as gravity gradient, on–orbit induced rotation and aerodynamics), the structural dynamics (due to flexible vibration modes) sources of acceleration disturbances, and station time domain shall be used for the analysis. The verification shall be considered successful when the data demonstrates that when mated with the Orbiter, the SM can maintain a Space Station attitude within +/– 15 degrees in roll and yaw, + 25 to 0 degrees in pitch with respect to (0,0,0) yaw, pitch, and roll orientation in the LVLH reference frame.

b. From activation of the USOS MDMs in US lab:

(1) The SM shall monitor the RS nonpropulsive effector's momentum state relative to saturation levels and provide notification to the USOS of excessive momentum levels during nonpropulsive attitude control. Verification of this requirement shall be done by demonstration. The demonstration will verify that the RS will send notification of excessive momentum levels to the USOS during nonpropulsive attitude control. The verification shall be considered successful if the USOS receive notification of excessive momentum levels from the SM.

(2) The SM shall execute attitude maneuver abort commands originating from the USOS when using nonpropulsive effectors. Verification of this requirement shall be done by demonstration.

The verification shall be considered successful if the SM receives, validates and processes the USOS maneuver abort commands during attitude control with nonpropulsive effectors.

(3) The SM shall notify the USOS of failure to converge to the commanded attitude. Verification of this requirement shall be done by test. The test will verify that the RS will send notification of failure to converge to the commanded attitude to the USOS and USGS during nonpropulsive attitude control. The verification shall be considered successful if the USOS receive notification of failure to converge to the commanded attitude from the SM.

AGREED.

4.3.7.2.3.45 Support uplinked data.

4.3.7.2.3.45.1 Receive uplinked data.

Reception of a data stream from the ground segment shall be verified by analysis and test. An analysis shall be performed to determine the minimum RF energy which will be present at the Service Module antennas during ground communication. A test shall be performed to verify this power, minus the standard 6 dB margin Russia uses, is sufficient to transfer data. The test shall be considered successful when it is shown that the calculated power from the analysis minus the standard 6 dB margin is sufficient to transfer data.

The ability of the Service Module to receive data originating in the USGS via the RGS shall be verified by analysis. This analysis shall be considered successful when it is shown, by analysis of lower tier test data, that data can be passed from the USGS to the Service Module.

AGREED.

4.3.7.2.3.45.2 Prepare uplinked data for on–board distribution.

The ability of the Service Module to demultiplex and convert uplinked data to the Space Station shall be verified by demonstration. The demonstration shall be considered successful when it is shown that a simulated data stream can be demultiplexed into a format compatible with the on–orbit Space Station.

AGREED.

4.3.7.2.3.45.3 Distribute uplinked data.

The ability to distribute uplinked audio to the Service Module shall be verified by demonstration. The demonstration shall be considered successful when it is shown that an uplinked audio signal can be routed to the audio terminals in the Service Module. The ability to distribute uplinked audio to the interfaces with other on–orbit Space Station segments shall be verified by demonstration. The demonstration shall be considered successful when it is shown that an uplinked audio signal can be routed to the audio interface of the other on–orbit Space Station segments.

The ability to distribute uplinked video to the Service Module shall be verified by demonstration. The demonstration shall be considered successful when it is shown that a uplinked video signal can be routed to the video display in the Service Module. The ability to distribute uplinked video to the interfaces with other on–orbit Space Station segments shall be verified by demonstration. The demonstration shall be considered successful when it is shown that a uplinked video signal can be routed to the video interface of the other on–orbit Space Station segments.

The ability to distribute uplinked data to the Service Module shall be verified by demonstration. The demonstration shall be considered successful when it is shown that uplinked data can be routed throughout the Service Module. The ability to distribute uplinked data to the interfaces with other on–orbit Space Station segments shall be verified by demonstration. The demonstration shall be considered successful when it is shown that uplinked data can be routed to the data interface of the other on–orbit Space Station segments.

AGREED.

4.3.7.2.3.46 Provide data for down link.

4.3.7.2.3.46.1 Prepare data for down link.

The ability of the SM to acquire audio, video and digital data (including telemetry data) for down link shall be verified by inspection. The verification shall be considered successful when an inspection of flight drawings and data/reports from a test or demonstration showing the ability of the SM to acquire audio, video, and digital data (including telemetry) from sources within the SM and from interfaces with other space station segments.

AGREED.

4.3.7.2.3.46.2 Transmit data for down link.

An inspection shall be performed to verify that the SM can transmit a data stream to the RS ground segment and that the SM can transmit ISS audio, video and digital data (including telemetry data)to the USGS relayed through the RGS. The verification shall be considered successful when an inspection of tests/reports shows that the down link coverage, bit error rate and data conversions of the RS ground segment received data stream (commands, voice, video, and navigation) downlinked from the SM meet the data stream user requirements. Analysis of tests/reports shall also show the ability of the SM to transmit ISS audio, video and digital data (including telemetry data) to the USGS through the RGS.

AGREED.

4.3.7.2.3.47 Support internal equipment translation.

The RS’s ability to provide handles or structural or mechanical parts suitable for gripping and tethering equipment that requires moving in accordance with SSP 50094, paragraph 6.4.2 shall be verified by inspection, or analysis, or demonstration. The inspection shall be based upon data collected by reviewing element assembly drawings and hardware drawings. The analysis shall be based upon clearance studies. The demonstration shall be based upon data collected from hardware or data supplied from flight experience where applicable. The inspection, or analysis, or demonstration shall be considered successful when it shows that the RS provides handles, or structural, or mechanical parts suitable for gripping and tethering equipment that requires moving in accordance with SSP 50094, paragraph 6.4.2.

AGREED.

4.3.7.2.3.48 Support internal equipment removal and replacement.

The RS’s ability to provide crew and equipment restraints capable of being located throughout the RS pressurized habitable volume to support removal and replacement of ORUs and in situ maintenance shall be verified by inspection or analysis or demonstration. The inspection shall be based upon data collected by reviewing element assembly drawings and hardware layout

drawings. The analysis shall be based upon clearance studies. The demonstration shall be based upon data collected during subsystem hardware testing and implementation of human factors test plans or data supplied from flight experience where applicable. The inspection or analysis or demonstration shall be considered successful when analysis or the data shows that the RS can provide crew and equipment restraints capable of being located throughout the RS pressurized habitable volume to support removal and replacement of ORUs and in situ maintenance.

AGREED.

4.3.7.2.3.49 Support internal equipment identification.

The RS's ability to provide inventory labels on portable equipment and ORUs to maintain an on–orbit inventory to support logistics/resupply operations shall be verified by inspection and/or demonstration. The inspection shall be based upon data collected by reviewing hardware drawings and equipment lists. The demonstration shall be based upon data collected during subsystem hardware testing and implementation of human factors test plans or data supplied from flight experience where applicable. The inspection and/or demonstration shall be considered successful when analysis of the data shows that the RS can provide inventory labels on portable equipment and ORUs to maintain an on–orbit inventory to support logistics/resupply operations.

AGREED.

4.3.7.2.3.50 Support internal equipment restraint.

The RS's ability to provide equipment restraints for every item that is not permanently attached to the RS structure shall be verified by inspection and/or demonstration. The inspection shall be based upon data collected by reviewing element assembly drawings and restraint hardware layout drawings. The demonstration shall be based upon data collected during subsystem hardware testing and implementation of human factors test plans or data supplied from flight experience where applicable. The inspection and/or demonstration shall be considered successful when analysis of the data shows that the RS can provide equipment restraints for every item that is not permanently attached to the RS structure.

AGREED.

4.3.7.2.3.51 Support orbital replaceable unit repair.

a. The RS's ability to support limited repair of selected ORUs by providing a work area and tools sufficient to mechanically disassembly, effect repair re–assembly and checkout shall be verified by inspection and/or demonstration. The inspection/demonstration shall be based upon data collected from subsystem assembly drawings and specifications and implementation of human factors test plans or data supplied from flight experience where applicable. The inspection/demonstration shall be considered successful when analysis of the data shows that the RS can support limited repair of selected ORUs by providing a work area and tools sufficient to mechanically disassemble, effect repair, re–assemble and checkout.

b. The RS's ability to provide isolation of failed ORUs by ground personnel and/or crew procedure shall be verified by inspection and/or demonstration. The inspection shall be based upon data collected from subsystem assembly drawings and specifications. The demonstration shall be based upon data collected during subsystem hardware testing and implementation of human factors test plans or data supplied from flight experience where applicable. The inspection and/or demonstration shall be considered successful when analysis of the data shows that the RS can provide isolation of failed ORUs by ground personnel and/or crew procedure.

AGREED.

4.3.7.2.3.52 Store internal equipment.

The RS's ability to provide storage volume to store spare internal ORUs, tools, diagnostic equipment, and maintenance supplies shall be verified by analysis. The analysis shall be based upon data provided through drawings and lists of hardware dimensions and stowage requirements. The analysis shall be considered successful when the analysis shows that the RS can provide storage volume to store spare internal ORUs, tools, diagnostic equipment, and maintenance supplies.

AGREED.

4.3.7.2.3.53 Support external vehicle input data for proximity operations.

4.3.7.2.3.53.1 Receive external vehicle input data.

An inspection shall be performed to verify that the SM can receive audio, video, and "DISPLAY" data from the external Soyuz vehicle during approach and docking, and video and "Display" (KURS operational) data from the external unmanned vehicles during approach and docking. The verification shall be considered successful when an inspection of tests/reports shows that the SM can receive audio, video, and "DISPLAY" from the external Soyuz.

AGREED.

4.3.7.2.3.53.2 Prepare external input data for onboard distribution.

An inspection shall be performed to verify that the SM can process and distribute external input audio, video, and "Display" from the Soyuz vehicle and shall process and distribute the external video and "Display" data from the unmanned vehicles. The verification shall be considered successful when an inspection of tests/reports shows that the SM can distribute external input audio, video, and "Display" from the Soyuz vehicle, and can process and distribute the external video, and "Display" data from the unmanned vehicles.

AGREED.

4.3.7.2.3.54 Provide data for external vehicles for proximity operations.

4.3.7.2.3.54.1 Prepare data for external vehicles.

The ability of the SM to acquire, process and distribute audio, video and "DISPLAY" data from the Soyuz shall be verified by inspection. The verification shall be considered successful when inspection of flight drawings and data/reports from a test or demonstration showing the ability of the SM to acquire audio, video, and "DISPLAY" data from Soyuz.

AGREED.

4.3.7.2.3.54.2 Transmit data to external vehicles.

The ability of the SM to transmit audio to the Soyuz vehicle shall be verified by inspection. The verification shall be considered successful when inspection of data/reports from a test or demonstration showing the ability of the SM to transmit audio to the Soyuz vehicle.

AGREED.

4.3.7.2.3.55 Support external vehicle wave–off.

This verification shall be considered successful when an analysis of test data/reports for section 4.3.7.2.3.55.1 and 4.3.7.2.3.55.2 are acceptable.

AGREED.

4.3.7.2.3.55.1 Determine external vehicle wave–off.

Verification that the SM can independently determine and communicate vehicle wave–off to approaching Russian vehicles within the direct communication range of the approaching vehicle when it is no longer safe to proceed with docking shall be accomplished by analysis. The analysis shall consider the procedures and timeline associated with utilizing the external vehicle monitoring capability to formulate the wave–off decision and, for example to switch off the station based KURS to implement a decision to abort. For manned external vehicles, the analysis shall also consider the use the direct voice link to confirm to the wave–off decision. The verification shall be considered successful if the analysis data shows that the wave–off decision can be communicated to the vehicle within the direct communication range of the approaching vehicle.

AGREED.

4.3.7.2.3.55.2 Communicate wave–off to external vehicle.

SM communication to a Russian external vehicle to indicate unsafe docking conditions shall be verified by analysis. The verification shall be considered successful when an analysis of test data/reports from SM and Russian external vehicles show that the SM can successfully establish a RF communication link with a close proximity undocked Russian external vehicle.

AGREED.

4.3.7.2.3.56 Execute translation maneuvers.

4.3.7.2.3.56.1 Execute maneuver guidance.

a. From activation of the SM:

(1) The SM shall control the on–orbit Space Station invariant semimajor axis to within 1000 feet (3 sigma) of the targeted value at the end of the reboost maneuver. Verification of this requirement shall be done by analysis. Analysis shall be performed by the RSA, utilizing analytical tools, simulations and models of the ground and on–board hardware and software. The verification shall be considered successful when the analytic data shows that the SM can control the on–orbit Space Station invariant semimajor axis to within 1000 feet (3 sigma) of the targeted value at the end of the reboost maneuver.

(2) The SM shall be capable of executing single burn maneuvers commanded by the crew. Verification of this requirement shall be done by demonstration. Demonstration will be performed utilizing US and Russian flight software and hardware models. The verification shall be considered successful when demonstration show that SM is capable of executing single burn maneuvers commanded by the crew.

(3) The SM shall be capable of controlling the on–orbit Space Station orbit by executing open loop maneuver sequences provided by RGS or crew. Verification of this requirement shall be done by demonstration. Demonstration will be performed utilizing US and Russian flight software and hardware models. The verification shall be considered successful if the SM receive the open loop maneuver sequences and commands from the crew and execute the sequences and commands.

(4) When a crew installed matching unit provides connection between the SM and the CV, the SM shall be capable of transmitting open loop maneuver sequences to the CV. This requirement will be verified by test. The tests shall be performed utilizing Russian flight software and hardware models. The verification shall be considered successful if the CV successfully receives and executes open–loop maneuver commands from the SM.

b. From activation of the USOS MDMs in US lab:

(1) All commands and data transferred between the RS and USOS shall be in accordance with SSP 50097 ICD. Verification of this requirement shall be done by test. The test shall verify that commands and data transferred between the RS Central Computers and the USOS (C&C MDM and GN&CP MDM) are in accordance with SSP 50097 ICD. The verification shall be considered successful if the test proves that the RS can accept and provide commands and data in accordance with SSP 50097 ICD. This test is done in USA.

(2) The SM shall be capable of controlling the on–orbit Space Station orbit by executing open loop maneuver sequences originating from the RGS and provided to the SM via the USGS and USOS. Verification of this requirement shall be done by demonstration. Demonstration will be performed utilizing U .S. and Russian flight software and hardware models. The verification shall be considered successful if the SM receives the open loop maneuver sequences originating from the RGS via the USGS and USOS and executes the sequences and commands.

AGREED.

4.3.7.2.3.56.2 Execute translation thrust.

a. From activation of the SM:

a. From activation of the SM:

(1) The SM shall be capable of executing a translational maneuver of up to 5 feet per second within ninety minutes of being commanded to execute the maneuver, within the functional responsibilities for the SM as shown in Figures 4–B, 4–A15C, and 4–D. Verification of this requirement shall be done by test and/or analysis. The test and/or analyses will be performed utilizing RS flight software and hardware models to determine the time required to initiate a reboost sequence based on pre–stored data packets and complete the translation burn of up to 5 fps (1.5 m/s). Verification will be considered successful when the analysis and /or test data shows that the station can achieve a change in velocity of up to 5 feet per second within ninety minutes of being commanded to activate the systems and perform the SM tasks which are required to implement the translational maneuver, as shown in Figures 4–B, 4–A15C, and 4–D.

(2) The SM shall have the capability to terminate a maneuver execution (SM or CV on SM aft port) on command originating from RGS or crew within 1.0 second of receipt of the command, excluding the time of thrust tail off. Verification of this requirement shall be done by test. The test will be performed utilizing US and Russian flight software and hardware models. The verification shall be considered successful if the SM receive the terminate maneuver commands from RGS or crew and process the commands within the 1.0 second time constraint.

(3) The SM shall control translation maneuver initiation and termination times to within 1.0 second of the targeted values. Verification of this requirement shall be done by test. The test will be performed utilizing US and Russian flight software and hardware models. The verification shall be considered successful if the initiation and termination times meet the 1.0 second time constraint.

(4) The SM in combination with the FGB shall provide a propellant reserve to perform a reboost to an altitude that will allow 360 days orbital decay to an altitude of 150 nautical miles (278 km) under nominal operations. Verification of this requirement shall be done by analysis utilizing analytical tools and subsystem simulations. The analysis will be performed to ensure that all applicable on–orbit Space Station configurations can provide propellant for orbital thrust

increments to compensate for orbital decay during the operational lifetime. The analysis shall include propellant usage and distribution to determine adequate on–orbit propellant storage. Math models and configuration data shall be used for any decay analysis. The verification shall be considered successful when it is shown that all the applicable Station configurations are properly sized for propellant storage.

(5) The SM shall have the capability to determine total propellant levels in the SM tanks and report them to the RGS and crew. Verification of this requirement shall be done by demonstration. Demonstration will be performed during Stage verification using Russian flight software and hardware models. The verification shall be considered successful if the crew receives proper data from the SM.

(6) The SM shall have the capability to control the ISS attitude during translational maneuvers. Verification of this requirement shall be done by demonstration. The demonstration will be performed during stage verification using Russian flight software and hardware models. The verification shall be considered successful if the attitude is maintained during translation maneuvers.

(7) The SM shall have the capability to execute translational maneuver commands originating from the RGS or crew. Verification of this requirement shall be done by demonstration. The demonstration will be performed during Stage verification utilizing US and Russian flight software and hardware models. The verification shall be considered successful if the SM receives the translation commands from the RGS or crew and executes the maneuver.

(8) Reserved.

(9) The SM shall be able to enable or inhibit individual SM thrusters or groups of progress thrusters by direct command originating from the RGS or crew. Verification of this requirement shall be done by test. Test shall be performed utilizing US and Russian flight software and hardware models. The verification shall be considered successful if the firing or inhibit commands, sent from RGS or crew, are received and processed correctly by the SM and individual thrusters are either enabled or inhibited.

(10) The SM shall send propulsive effector status data to the RGS and crew. Verification of this requirement shall be done by demonstration. The demonstration will be performed during Stage verification with Russian flight and ground software and hardware models. The verification shall be considered successful if the RGS and crew receives proper data from the SM.

(11) The SM propulsion system shall have performance as shown in Table VI–A. The operation of the thrusters, the quantity of expended propellant, and the operational life of components of the propulsion system will be verified during the ground test of components and the propulsion system in accordance with the Test Plans.

(12) Reserved.

(13) The SM shall be capable of feeding propellant directly to the Cargo Vehicle thrusters at a pressure and flowrate sufficient to perform translation maneuvers. This requirement shall be verified by analysis, ground tests, or by analogous flight unit performance in orbit in accordance with the Test Plans.

(14) The SM shall have the capability to support propellant feed from FGB propellant tanks to the CV thrusters at a pressure and flowrate sufficient to perform translation maneuvers. This requirement shall be verified by analysis, ground tests, or by analogous flight unit performance in orbit in accordance with the Test Plans.

b. From activation of the USOS MDMs in US lab:

(1) The SM shall have the capability to terminate a translational maneuver execution (SM or CV on SM aft port) in response to an abort command originating from USOS within 1.0 second of receipt of the command. Verification of this requirement shall be done by test. Test will be performed during Stage verification utilizing US and Russian flight software and hardware models. The verification shall be considered successful if the SM receives the terminate translational maneuver abort commands from the USOS and processes the command within the 1.0 second time constraint.

(2) The SM shall have the capability to determine total propellant levels in the SM tanks and report them to the USOS. Verification of this requirement shall be done by demonstration. Demonstration will be performed during Stage verification U.S. and Russian flight software and hardware models. The verification shall be considered successful if the USOS receives proper data from the SM.

(3) The SM shall have the capability to execute translational maneuver abort commands originating from the USOS (excluding the First–Generation the CV). Verification of this requirement shall be done by demonstration. The demonstration will be performed during Stage verification utilizing US and Russian flight software and hardware models. The verification shall be considered successful if the SM receives the translation maneuver abort commands from the USOS and executes the translational maneuver abort.

(4) The SM shall be able to enable or inhibit SM individual thrusters or groups of progress thrusters by direct command originating from the USOS. Verification of this requirement shall be done by test. Test shall be performed utilizing US and Russian flight software and hardware models. The verification shall be considered successful if the firing or inhibit commands, sent from the USOS, are received and processed correctly by the SM and individual thrusters are either fired or inhibited.

(5) The SM shall send propulsive effector status data to the USOS. Verification of this requirement shall be done by demonstration. The demonstration will be performed during Stage verification with Russian and US flight software and hardware models. The verification shall be considered successful if the USOS receives proper data from the SM.

c. TBD When a crew installed matching unit provides connection between the CV and the SM:

(1) The SM shall have the capability to inhibit and enable groups of CV thrusters.

(2) The SM shall send CV propulsive effector data (status of thruster operations – on/off) to the RGS and crew.

(3) The SM shall have the capability of executing translational maneuvers by issuing thruster on/off commands to the CV small thrusters

(4) The SM shall have the capability of issuing translational maneuver commands to the CV.

This requirement will be verified by test. The tests shall be performed utilizing Russian flight software and hardware models. The verification shall be considered successful if the CV successfully receives and executes thruster inhibit and enable commands from the SM; the SM sends propulsive effector data to the RGS and crew and the SM executes a translational maneuver by issuing on/off commands to the CV small thrusters.

AGREED.

4.3.7.2.3.57 Control attitude – propulsive.

a. From activation of the SM:

(1) The SM shall control steady state attitude rates to within +/– 0.20 degrees per second per axis when translational maneuvers are performed by the SM when performing translation maneuvers with small CV thrusters. Verification of this requirement shall be done by analysis. The analysis shall ensure that the station shall be capable of controlling attitude rates to within +/– 0.20 degrees per second per axis when performing translational maneuvers. Analysis shall be performed utilizing analytical tools, simulations and models of the onboard hardware (including structural dynamics) and software. The verification shall be considered successful when the analysis data demonstrates that the SM can control the attitude rates to within +/– 0.20 degrees per second per axis.

(2) The SM shall control transient attitude rates to within +/–0.50 degrees per second in three axes when translation maneuvers are performed by the SM when performing translation maneuvers with small CV thrusters. Verification of this requirement shall be done by analysis. The analysis shall ensure that the station shall be capable of controlling transient attitude rates to within +/– 0.50 degrees per second per axis when performing translational maneuvers. Analysis shall be performed utilizing analytical tools, simulations and models of the onboard hardware (including structural dynamics) and software. The verification shall be considered successful when the analysis data demonstrates that the SM can control the transient attitude rates to within +/– 0.50 degrees per second per axis.

(3) The transient rates shall not exceed the steady state value for more than 30 seconds. Verification of this requirement shall be done by analysis. The analysis shall ensure that the station shall be capable of controlling attitude rates to within the steady–state requirement value after 30 seconds when performing translational maneuvers. Analysis shall be performed utilizing analytical tools, simulations and models of the onboard hardware and software. The verification shall be considered successful when the analysis data demonstrates that the SM can control the attitude rates to within the steady state requirement value within 30 seconds from burn initiation.

(4) The SM shall have the capability to control to TEA, LVLH, and inertial attitudes using propulsive effectors. Verification of this requirement shall be done by demonstration. the demonstration shall be performed utilizing US and Russian flight software and hardware models. The verification shall be considered successful if the demonstration proves that the RS can maintain a TEA, LVLH, and inertial using only propulsive effectors.

(5) The SM shall monitor convergence of the actual attitude relative to the commanded attitude and provide notification to the RGS and crew of failure to converge. Verification of this requirement shall be done by test. The test shall be performed utilizing US and Russian flight software and hardware models. The verification shall be considered successful if the crew receives the failure notification from the SM.

(6) The SM shall execute attitude control commands originating from the RGS or crew when using propulsive effectors. Verification of this requirement shall be done by demonstration. The demonstration shall be performed utilizing US and Russian flight software and hardware models. The verification shall be considered successful if the SM receives the commands from the RGS or crew and processes the commands.

(7) The SM shall monitor propellant usage relative to the predicted propellant usage and provide notification to RGS and crew of excessive propellant usage during propulsive attitude control.

Verification of this requirement shall be done by demonstration. Demonstration shall be performed utilizing US and Russian flight software and hardware models. The verification shall be considered successful if the SM status data shows that the SM monitors propellant usage relative to the predicted propellant usage and provides notification to the RGS and crew of excessive propellant usage during propulsive attitude control.

(8) The SM shall provide dynamic stability to perform docking and undocking with the Orbiter and other external vehicles at an altitude of 278 kilometers (150 nautical miles) or above. Verification of this requirement shall be done by analysis. The analysis shall ensure that the station shall be capable of providing sufficient dynamic stability to perform docking and undocking with the Orbiter at an altitude of 278 kilometers (150 nautical miles) or above. Analytical tools and simulations of the integrated RS/USOS segment shall be used for the analysis. The verification shall be considered successful when the analysis data demonstrates that the SM can provide dynamic stability to perform docking and undocking with the Orbiter and other external vehicles at altitudes specified in the requirement.

(9) The SM shall provide attitude control capability during all phases of Orbiter and other external vehicles approach and departure operations, and the capability to return to the desired attitude after completion of Orbiter and other external vehicles docking or undocking operations. Verification of this requirement shall be done by demonstration. The demonstration will show that the RS is capable of providing attitude control capability during all phases of Orbiter and other external vehicles approach and the capability to return to the desired attitude upon completion of Orbiter mating or demating operations. The demonstration will utilize Russian computers, software and hardware models. The verification shall be considered successful when the demonstration shows that the SM can provide attitude control capability during all phases of Orbiter and other external vehicles approach and departure operations, and the capability to return to the desired attitude upon completion of Orbiter and other external vehicles mating or demating operations.

(10) The SM shall support docking operations with the Orbiter for the time period of two orbital revolutions. Verification of this requirement shall be done by demonstration. Demonstration shall be performed utilizing U.S. and Russian flight software and hardware models. The verification shall be considered successful if the analysis shows that the RS supports docking operations with the Orbiter for the time period of two orbital revolutions.

(11) The SM Motion Control System's contribution to the peak to peak angular motion (dynamic error range) shall be within +/– 0.8 degrees (3 sigma) per axis in the SM reference frame during Orbiter approach and station–keeping. Verification of this requirement shall be done by analysis. Analysis shall be performed by the RSA, utilizing analytical tools, simulations and models of the ground and onboard hardware (including sensor errors and structural dynamics) and software. Analytical tools which are capable of providing integrated RS/USOS flex and rigid body analysis shall be used. The verification shall be considered successful when the data demonstrates that the RS Motion Control System's contribution to the peak to peak angular motion is within +/– 0.8 degrees per axis during Orbiter approach and station–keeping.

(12) The SM Motion Control System shall maintain the attitude knowledge of the SM reference frame relative to the true LVLH coordinates to within 0.5 degrees per axis during shuttle docking operations. Verification of this requirement shall be done by analysis. Analysis shall be performed by the RSA. The verification shall be considered successful when the data demonstrates that the RS Motion Control System maintains the attitude knowledge of the SM reference frame relative to the true LVLH coordinates to within 0.5 degrees per axis Orbiter docking operations.

(13) The SM Motion Control System shall maintain angular rate of the SM reference frame relative to the true LVLH coordinates to within 0.04 degrees per second per axis during Orbiter

approach and station–keeping. Verification of this requirement shall be done by analysis. Analysis shall be performed by the RSA, utilizing analytical tools, simulations and models of the ground and onboard hardware (including sensor errors and structural dynamics) and software. Analytical tools which are capable of providing integrated RS/USOS flex and rigid body analysis shall be used. The verification shall be considered successful when the data demonstrates that the RS Motion Control System maintains the angular rate of the SM reference frame relative to the true LVLH coordinates to within 0.04 degrees per second per axis during Orbiter approach and station–keeping.

(14) The SM MCS shall maintain attitude within +/– 3.0 degrees per axis in the SM reference frame when controlling to a LVLH or inertial attitude with propulsive effectors or with nonpropulsive effectors assisted by propulsion effectors. Verification of this requirement shall be done by analysis. Analysis shall be performed by the RSA, utilizing analytical tools, simulations and models of the ground and onboard hardware and software. Analytical tools which are capable of providing integrated RS/USOS flex and rigid body analysis shall be used. The verification shall be considered successful when the data demonstrates that the attitude is held within tolerance of +/– 3.0 degrees per axis per orbit with respect to LVLH or inertial.

(15) Reserved.

(16) The SM shall maintain attitude within +/– 10.0 degrees of the TEA attitude in the SM frame. Verification of this requirement shall be done by analysis. Analytical tools which are capable of providing simulations of the quasi–steady dynamic environment (low frequencies such as gravity gradient, on–orbit induced rotation and aerodynamics), the structural dynamics (due to flexible vibration modes) sources of acceleration disturbances, and station time domain shall be used for the analysis. The verification shall be considered successful when the data demonstrates that the SM can maintain attitude within +/– 10.0 degrees of the TEA attitude in the SM frame.

(17) The SM shall control attitude rates to within +/– 0.03 degrees per second for the X–axis and +/– 0.015 degrees per second for the Y– and Z–axes with respect to the commanded attitude when not performing translational or rotational maneuvers. Verification of this requirement shall be done by analysis. Analysis shall be performed to verify requirement compliance, utilizing analytical tools which are capable of providing the quasi–steady dynamic environment (low frequencies such as gravity gradient, on–orbit induced rotation and aerodynamics), the structural dynamics (due to flexible vibration modes) sources of acceleration disturbances, and station time domain and the integrated RS/ISS flex and rigid body analysis. The verification shall be considered successful when the analysis shows that the SM can control attitude rates to within +/– 0.03 degrees per second for the X axis and +/– 0.015 degrees per second for the Y and Z axes with respect to the commanded attitude when not performing translational or rotational maneuvers.

(18) The SM shall provide attitude control of the fully mated Space Station/Orbiter/other external vehicles configurations. Verification of this requirement shall be done by analysis. The verification shall utilize RS computers and Russian hardware models integrated with USOS flight software and hardware models. The station configuration for the analysis shall be that given in the requirement. The verification shall be considered successful if the analysis indicates that the Space Station / Orbiter / other mated vehicles are controllable.

(19) The SM shall be able to enable or inhibit individual thrusters by direct command originating from RGS or crew. Verification of this requirement shall be done by test. Test shall be performed utilizing US and Russian flight software and hardware models. The verification shall be considered successful if the firing or inhibit commands, sent from RGS or crew, are received and processed correctly by the SM and individual thrusters are either fired or inhibited.

(20) The SM shall control the attitude and attitude rates while executing maneuvers to alter the on–orbit Space Station attitude. Verification of this requirement shall be done by demonstration. Demonstration shall be performed utilizing US and Russian flight software and hardware models. The verification shall be considered successful if the attitude and attitude rates are controlled during maneuver execution.

(21) The SM shall be capable of an angular maneuver rate of at least 0.10 degrees per second per axis. Verification of this requirement shall be done by analysis. Analysis shall be performed by the RSA, utilizing analytical tools, simulations and models of the ground and onboard hardware (including sensor errors, structural dynamics, mating alignment, and thermal deformation) and software. The verification shall be considered successful if the SM executes maneuvers of at least 0.10 degrees per second per axis.

(22) The SM shall maintain Space Station attitude within +/ –15 degrees in yaw and roll, +15 to –20 degrees in pitch with respect to (0, 0, 0) yaw, pitch, and roll orientation in the LVLH reference frame to meet thermal constraints and power generation requirements and to minimize the use of propellant. Verification of this requirement shall be done by analysis. Analytical tools which are capable of providing simulations of the quasi–steady dynamic environment (low frequencies such as gravity gradient, on orbit induced rotation and aerodynamics), the structural dynamics (due to flexible vibration modes) sources of acceleration disturbances, and station time domain shall be used for the analysis. The verification shall be considered successful when the data demonstrates that the SM can maintain attitude within +/–15 degrees in yaw and roll, +15 to –20 degrees in pitch with respect to the (0, 0, 0) yaw, pitch, and roll orientation in the LVLH reference frame.

(23) The SM shall provide the capability to hold the current attitude of the SM reference frame with respect to LVLH at the instant that this command is received. Verification of this requirement shall be done by demonstration. Demonstration shall be performed by utilizing U.S. and Russian flight software and hardware models. The verification shall be considered successful if the correct LVLH attitude is maintained.

(24) The SM shall provide a mate/demate indicator to the USOS when an external vehicle mates/dematers with the RS. Verification of the requirement shall be done by demonstration. Demonstration shall be performed by utilizing U.S. and Russian flight software and hardware models. The verification shall be considered successful if the mate/demate indicator is provided to the USOS.

(25) The SM Motion Control System's contribution to the peak to peak angular motion (dynamic error range) shall be within 4.0 degrees peak to peak per axis in the SM reference frame after Orbiter departure (after activation of the MCS attitude control). Verification of this requirement shall be done by analysis. Analysis shall be performed by the RSA, utilizing analytical tools, simulations and models of the ground and onboard hardware (including sensor errors and structural dynamics) and software. Analytical tools which are capable of providing integrated RS/USOS flex and rigid body analysis shall be used. The verification shall be considered successful when the data demonstrates that the RS Motion Control System's contribution to the peak to peak angular motion is within 4.0 degrees peak to peak per axis in the SM reference frame after Orbiter departure.

(26) The SM MCS shall maintain angular rate of the SM body axes relative to the true LVLH coordinates to within 0.1 degrees per second per axis after Orbiter departure (after activation of the MCS attitude control). Verification of this requirement shall be done by analysis. Analysis shall be performed by the RSA, utilizing analytical tools, simulations and models of the ground and onboard hardware (including sensor errors and structural dynamics) and software.

Analytical tools which are capable of providing integrated RS/USOS flex and rigid body analysis shall be used. The verification shall be considered successful when the data demonstrates that the SM Motion Control System maintains the angular rate of the SM body axes relative to the true LVLH coordinates to within 0.1 degrees per second per axis after Orbiter departure.

(27) The SM shall be capable of performing attitude control using one set of propellant tanks while the other set is resupplied with propellant from either a CV propellant resupply system or the FGB propulsion system. This requirement shall be verified by analysis, ground tests, or by analogous flight unit performance in orbit in accordance with the Test Plans.

(28) The SM Motion Control System's contribution to the peak to peak angular motion (dynamic error range) shall be within 4.0 degrees peak to peak per axis in the SM reference frame after a failed Orbiter docking and back away. Verification of this requirement shall be done by analysis. The verification shall be considered successful when the data demonstrates that, while the ISS is under the effects of Orbiter plume disturbances, the SM MCS's contribution to the peak to peak angular motion is within 4.0 degrees peak to peak per axis.

(29) The SM MCS shall maintain angular rate of the SM body axes relative to the true LVLH coordinates to within 0.1 degrees per second per axis after a failed Orbiter docking and back away. Verification of this requirement shall be done by analysis. The verification shall be considered successful when the data demonstrates that, while the ISS is under the effects of Orbiter plume disturbances, the SM MCS can maintain the angular rate of the SM body axes relative to the true LVLH coordinates to within 0.1 degrees per second per axis.

(30) The SM shall provide attitude control when the CV is performing translational maneuvers with the CV small thrusters. Verification of this requirement shall be done by test. The tests shall be performed utilizing Russian flight software and hardware models. The verification shall be considered successful if the RS provides stable attitude control when performing a translational maneuver with the CV small thrusters.

(31) When a crew installed matching unit provides connection between the CV small thrusters and the SM terminal computer, the SM shall be capable of issuing thruster on/off commands to CV small thrusters for attitude control. Verification of this requirement shall be done by test. The tests shall be performed utilizing Russian flight software and hardware models. The verification shall be considered successful if the SM issues thruster on/off commands to the CV small thrusters and the CV responds appropriately to these commands.

(32) When mated with the Orbiter, the SM shall maintain Space Station attitude within +/ –15 degrees in roll and yaw, +25 to 0 degrees in pitch with respect to (0, 0, 0) yaw, pitch, and roll orientation in the LVLH reference frame. Verification of this requirement shall be done by analysis. Analytical tools which are capable of providing simulations of the quasi–steady dynamic environment (low frequencies such as gravity gradient, onorbit induced rotation and aerodynamics), the structural dynamics (due to flexible vibration modes) sources of acceleration disturbances, and station time domain shall be used for the analysis. The verification shall be considered successful when the data demonstrates that when mated with the Orbiter, the SM can maintain a Space Station attitude within +/–15 degrees in yaw and roll, +25 to 0 degrees in pitch with respect to (0, 0, 0) yaw, pitch, and roll orientation in the LVLH reference frame.

b. From activation of the RS nonpropulsive effectors:

The SM shall control attitude rates to within +/–.015 degrees per second per axis when not performing translational or rotational maneuvers. Verification of this requirement shall be done

by analysis. Analysis shall be performed to verify requirement compliance, utilizing analytical tools which are capable of providing the quasi–steady dynamic environment (low frequencies such as gravity gradient, on–orbit induced rotation and aerodynamics), the structural dynamics (due to flexible vibration modes) sources of acceleration disturbances, and station time domain and the integrated RS/ISS flex and rigid body analysis. The verification shall be considered successful when the analysis shows that the RS can control attitude rates to within +/–0.015 degrees per second per axis when not performing translational or rotational maneuvers.

c. From activation of the USOS MDMs in US lab:

(1) The SM shall monitor convergence of the actual attitude relative to the commanded attitude and provide notification to the USOS of failure to converge. Verification of this requirement shall be done by test. The test shall be performed utilizing US and Russian flight software and hardware models. The verification shall be considered successful if the USOS receives the failure to converge notification from the SM.

(2) The SM shall execute attitude maneuver abort control commands originating from the USOS when using propulsive effectors. Verification of this requirement shall be done by demonstration. The demonstration shall be performed utilizing US and Russian flight software and hardware models. The verification shall be considered successful if the SM receives and processes the attitude maneuver abort commands from the USOS.

(3) The SM shall monitor propellant usage relative to the predicted propellant usage and provide notification to USOS of excessive propellant usage during propulsive attitude control. Verification of this requirement shall be done by demonstration. Demonstration shall be performed utilizing US and Russian flight software and hardware models. The verification shall be considered successful if the SM monitors propellant usage relative to the predicted propellant usage and provides notification to the USOS of excessive propellant usage during propulsive attitude control.

(4) The SM shall be able to enable or inhibit individual thrusters by direct command originating from USOS. Verification of this requirement shall be done by test. The test shall be performed utilizing US and Russian flight software and hardware models. The verification shall be considered successful if the SM will process the firing commands received from the USOS.

(5) The SM shall send propulsive effector data to the USOS. Verification of this requirement shall be done by demonstration. Demonstration shall be performed utilizing US and Russian flight software and hardware models. The verification shall be considered successful if the USOS receives the data from the SM during demonstration.

d. From activation of the SDMS on S0:

The SM shall execute timed sequences of thruster firings to support structural testing. Verification of this requirement shall be done by test. It is assumed that the timed sequences of thruster commands shall be part of a procedure. The test shall be performed utilizing US and Russian flight software and hardware models. The verification shall be considered successful if the SM will process firing commands upon receiving test activation commands from the USGS or crew during demonstration.

AGREED.

4.3.7.2.3.58 Provide Desaturation Torque.

a. From activation of the RS nonpropulsive effectors:

(1) The SM shall provide a torque using propulsive effectors when commanded by the crew or RGS for RS nonpropulsive effector desaturation. Verification of this requirement shall be done by demonstration. Demonstration shall be performed utilizing US and Russian flight software and hardware models. The verification shall be considered successful if the SM provides a torque using propulsive effectors when commanded by the RGS or crew for RS nonpropulsive effector desaturation.

(2) The SM shall have a capability to provide propulsive effector status during desaturation activities to the RGS and crew. Verification of this requirement shall be done by demonstration. Demonstration shall be performed utilizing US and Russian flight software and hardware models. The verification shall be considered successful if the RGS and crew receive the data and status from the SM during desaturation activities.

(3) The SM shall have the capability to provide a torque with a specified thruster pulse pattern for use by its propulsive effectors when both a desaturation command for the RS nonpropulsive effectors is issued and the SSRMS is active. The verification of this requirement shall be done by demonstration. The demonstration shall be performed utilizing U.S. and Russian flight software and hardware models. The verification shall be considered successful when the RS provides a torque with a specified thruster pulse pattern for desaturation of the RS nonpropulsive effectors at the command of the crew or RGS.

b. From activation of the USOS MDMs in US lab:

(1) Reserved.

(2) The SM shall provide an indication of initiation of propulsive effector firings and status of propulsive effectors during desaturation activities to the USOS and crew. Verification of this requirement shall be done by demonstration. The demonstration shall be performed utilizing US and Russian flight software and hardware models. The verification shall be considered successful if the USOS receives the data and status from the SM during desaturation activities.

c. From activation of the US nonpropulsive effectors:

(1) The SM shall provide a torque using propulsive effectors when commanded by the USOS, crew, and RGS for RS and USOS nonpropulsive effector desaturation. Verification of this requirement shall be done by demonstration. The demonstration shall be performed utilizing U.S. and Russian flight software and hardware models. The verification shall be considered successful if the SM provides a torque using propulsive effectors for nonpropulsive effector desaturation at the command of the USOS or RGS for RS and USOS effectors.

(2) The SM shall provide an indication of initiation of propulsive effector firings and status of propulsive effectors during desaturation activities to the USOS and crew. Verification of this requirement shall be done by demonstration. The demonstration shall be performed utilizing US and Russian flight software and hardware models. The verification shall be considered successful if the USOS receives the data and status from the SM during desaturation activities.

(3) The SM shall provide a change in angular momentum within 20% magnitude and within +/–15 degrees angle. Verification of this requirement shall be done by analysis. Analytic models capable of modeling vehicle uncertainties as well as U.S. and RS hardware and software will be used for the analysis. The verification shall be considered successful if the magnitude and direction of the desaturation are within specified limits.

(4) The SM shall have the capability to provide a torque with a specified thruster pulse pattern when desaturation is commanded for the U.S. nonpropulsive effectors by the USOS and crew.

The verification of this requirement shall be done by demonstration. The demonstration shall be performed utilizing U.S. and Russian flight software and hardware models. The verification shall be considered successful when the RS provides a torque with a specified thruster pulse pattern for desaturation of the U.S. nonpropulsive effectors at the command of the USOS and crew.

d. After activation of the SM:

The RS shall have the capability to store a thruster pulse pattern provided by the USOS, RGS, and crew for use by the RS when commanded by the USOS and crew to provide desaturation. The verification of this requirement shall be done by demonstration. The demonstration shall be performed utilizing U.S. and Russian flight software and hardware models. The verification shall be considered successful when the RS stores uplinked thruster pulse pattern information for use during USOS and crew commanded desaturation.

AGREED.

4.3.7.2.3.59 Provide depressurization capabilities.

The SM ability to provide required capabilities while depressurized, as specified in 3.7.2.3.61, shall be verified by analysis in accordance with the part of the off–nominal situations table relating to depressurization. The list of analysis data is identified in 4.3.2.1.1.1.24.1.

AGREED.

4.3.7.2.3.60 Communications with US Airlock Orlan suits.

Communication to Orlan suited crew in the U.S. airlock shall be verified by analysis. The analysis shall be considered successful when the data shows that the RF power level present when transmitting meets or exceeds the requirements of SSP 42121.

AGREED.

4.3.7.2.3.61 Support attitude control handover operations.

a. From activation of the USOS Stage 5A GN&C and C&C flight software:

1) The SM shall have the capability to accept manual transfer of attitude control authority from the USOS. Verification of this requirement shall be done by test. The test shall be performed utilizing US and Russian flight software and hardware models. The verification shall be considered successful in the case of a conditional (handshake) transfer of control authority if test results show that: (1) If US GN&C mode is either Wait, standby, User Data Generation, or Drift, the SM promptly begins active attitude control, (2) If US GN&C mode is either CMG Only or Thruster Assist, the SM commands US GN&C to Drift, and begins active attitude control after US GN&C modes to Drift, (3) If US GN&C is unable to mode to Drift, the SM reports this to US C&C and remains in the current mode, and (4) If the SM cannot communicate with US GN&C, the SM issues a ‘No Comm’ advisory to the US C&C and, after a settable period of time, begins active attitude control. The verification shall be considered successful in the case of an unconditional transfer of attitude control if test results show that the RS promptly begins without conditions active attitude control upon command from US C&C.

2) The SM shall have the capability to support manual transfer of attitude control authority to the USOS. Verification of this requirement shall be done by test. The test shall be performed utilizing US and Russian flight software and hardware models. The verification shall be

considered successful in the case of a conditional (with handshake) AC handover if test results show that (1) the RS properly responds to a US C&C command to prepare for CMG Thruster Assist and sets the readiness indicator upon completion of the preparations, (2) the RS properly responds to US GN&C handshake commands.

4.3.7.3 Reserved.

4.3.7.4 Reserved.

4.3.7.5 Reserved.

4.3.7.6 Soyuz vehicle.

Since the Soyuz vehicle represents an existing design with a long flight history, verification of all Soyuz Vehicle requirements will be based on flight experience and/or certification or verification for use from previous applications. Where specific verification requirements are agreed as necessary between the U.S. and the Russian specialist, they are included in section 4.3.7.6 using the appropriate paragraph number from section 3.7.6 that contains the requirement to be verified; otherwise the paragraph identification and associated text is omitted. When a Soyuz vehicle design modification is made, the Russian specialists will propose the specific verification methods in accordance with current RSA verification procedures. They will provide description of the verification activity, success criteria, and identify any joint verification. American specialists will negotiate specific verification methods only if there is disagreement on the proposed verification method.

AGREED.

4.3.7.6.5.9.3.2 Proximity operations.

4.3.7.6.5.9.3.2.1 Provide automated collision avoidance maneuvers.

The capability for the Soyuz vehicles to execute automated collision avoidance maneuvers to provide safe trajectories if an abort is initiated by onboard software or RGS shall be verified by analysis. The analysis shall consider the methods and their alternatives for initiating the different types of aborts and their regions of applicability, including the necessary implementation timeline. The verification shall be considered successful if the analysis shows that the timeline is sufficient for selection, initiation and execution of the appropriate abort procedure; and, when executed, the automated abort procedures result in an abort maneuver sequence and subsequent trajectories that avoids a collision with the ISS. Soyuz crew capability to provide manual collision avoidance shall be verified by inspection.

AGREED.

4.3.7.6.5.9.3.2.2 Mission planning – rendezvous and docking.

Verification that the on–orbit software and RGS mission planning can produce Soyuz vehicle rendezvous and docking reference profiles that provide the required minimum safety features shall be accomplished by analysis and demonstration. The analysis shall consider 3 sigma dispersed final rendezvous trajectories targeted out–of–plane to the range of ISS rendezvous altitudes both during the assembly sequence and subsequent to assembly complete. The demonstration shall show that detailed rendezvous and docking reference profiles can be produced and procedures provided to implement them. The verification shall be considered successful if: (1) the analysis shows the final rendezvous trajectories pass safely by the ISS, if no further maneuvers are conducted, and that the rendezvous and proximity operations trajectories can remain outside the 400m ”keep out zone” until start of the fly around phase; and (2) the demonstration produces a detailed reference profile and associated procedures.

AGREED.

4.3.7.6.5.9.3.3 Soyuz vehicle docking indication.

Current capability. No additional verification required.

AGREED.

4.3.7.6.5.9.4.9 Separation clearance range.

Verification that the nominal Soyuz separation procedures assure that the Soyuz vehicle is outside the a range of 0.27 nmi (0.5 km) to the ISS within 22 minutes after the time of separation and will not re–enter this separation range, shall be accomplished by analysis. The analysis shall consider limit values (deviation in 3 sigma) of angular and linear rates of the vehicle after undocking, all potential docking ports (including those available only during the assembly phase) and the expected range of ISS flight attitudes, when Soyuz separation occurs. If post separation flyaround is part of the operational plans, then the 22 minutes shall be counted starting after completion of post separation flyaround. The verification shall be considered successful if the analysis shows that a minimum 0.27 nmi (0.5 km) separation clearance is reached within 22 minutes and that the Soyuz vehicle does not subsequently re–enter the 0.27 nmi (0.5 km) range to the ISS when Soyuz separates from aft or nadir docking ports and for ISS flight attitudes within +–/ 30 of LVLH.

AGREED.

4.3.7.6.5.9.4.10 Separation from a tumbling station.

Verification that the Soyuz design shall provide for the departure from the ISS in emergency situations where attitude control is impaired or disabled and uncontrolled ISS attitude rates exist at the time of Soyuz separation, shall be accomplished by analysis. ISS tumbling rates shall be predicted based on a scenario of orbital debris striking an ISS module that causes depressurization and resulting forces and torque on the ISS that are uncontrolled. Analysis shall verify that a special Soyuz thruster firing automated sequence, initiated immediately after commanded separation, will prevent recontact with the ISS in the presence of the predicted ISS tumbling rates.

AGREED.

4.3.7.6.5.9.5.1 Crew intervention.

Current capability. No additional verification required.

AGREED.

4.3.7.7 Cargo Vehicle verification.

Since the Cargo Vehicle represents an existing design with a long flight history, verification of all Cargo Vehicle requirements will be based on flight experience and/or certification or verification for use from previous applications. Where specific verification requirements are agreed as necessary between the U.S. and the Russian specialists, they are included in section 4.3.7.7 using the appropriate paragraph number from section 3.7.7 that contains the requirement to be verified; otherwise the paragraph identification and associated text is omitted. When a Cargo Vehicle design modification is made, the Russian specialists will propose the specific verification methods in accordance with current RSA verification procedures. They will provide description of the verification activity, success criteria, and identify any joint verification. American specialists will negotiate specific verification methods only if there is disagreement on the proposed verification method.

AGREED.

4.3.7.7.3.5 Safe.

Failure isolation or safing of identified hazardous conditions in the CV, as specified in 3.7.7.3.5, shall be verified by analysis in accordance with the method for evaluating credible off–nominal situations. The list of analysis data is identified in 4.3.2.1.1.1.4.1.

AGREED.

4.3.7.7.3.7 Determine state vector and attitude.

a. From activation of any CV:

The CV shall provide attitude and attitude rate data to the RGS with accuracy of 1 degree per axis and 0.1 degree per second per axis at 1 Hz when in view of the RGS. Verification of this requirement shall be done by test. The test shall be performed using RS and US flight or equivalent computers and software. The verification shall be considered successful if the test proves that the RS can provide the USOS with attitude, and attitude rate data at a rate of 1 Hz. This test done in USA.

AGREED.

4.3.7.7.3.10 Execute maneuver guidance.

a. The CV shall be capable of controlling the on–orbit Space Station orbit by executing open loop maneuver sequences provided by the RGS. Verification of this requirement shall be done by demonstration. The demonstration shall be performed by the Russian Segment to ensure that the RS is capable of controlling the on–orbit Space Station orbit by executing open loop maneuver sequences provided by the RGS. The verification shall be considered successful if the demonstration proves that the CV is capable of controlling the on–orbit Space Station orbit by executing open loop maneuver sequences provided by the RGS.

b. The CV shall be capable of controlling the on–orbit Space Station orbit by executing open loop maneuver sequences provided by the SM when a crew installed matching unit provides connection between the CV and the SM. Verification of this requirement shall be done by demonstration. The demonstration shall be performed by the Russian Segment to ensure that the RS is capable of controlling the on–orbit Space Station orbit by executing open loop maneuver sequences provided by the RGS. The verification shall be considered successful if the demonstration proves that the CV is capable of controlling the on–orbit Space Station orbit by executing open loop maneuver sequences provided by the RGS or SM.

AGREED.

4.3.7.7.3.11 Execute translation thrust.

(1) Reserved.

(2) The Cargo Vehicle shall have the capability to terminate a maneuver execution on command originating from RGS or SM within 1.0 second of receipt of the command. Verification of this requirement shall be done by test. The test will be performed utilizing US and Russian flight software and hardware models. The verification shall be considered successful if the CV receive the terminate maneuver commands from RGS and process the commands within the 1.0 second time constraint.

(3) The Cargo Vehicle shall control translation maneuver initiation and termination times to within 1.0 second of the targeted values. Verification of this requirement shall be done by test. The test will be performed utilizing US and Russian flight software and hardware models. The verification shall be considered successful if the initiation and termination times meet the 1.0 second time constraint.

(4) The Cargo Vehicle shall incrementally supply propellant to the SM and through the SM to the FGB. Verification of this requirement shall be done by analysis. The verification shall be considered successful when the analysis data demonstrates that the CV can incrementally supply propellant to the SM and through the SM to the FGB.

(5) The Cargo Vehicle shall have the capability to determine total propellant consumption in the Cargo Vehicle tanks and report it to the RGS. Verification of this requirement shall be done by demonstration. Demonstration will be performed during Stage verification using Russian flight software and hardware models. The verification shall be considered successful if the RGS receives proper data from the SM.

(6) The Cargo Vehicle shall have the capability to execute translational maneuver commands originating from the RGS or SM. Verification of this requirement shall be done by demonstration. The demonstration will be performed during Stage verification utilizing US and Russian flight software and hardware models. The verification shall be considered successful if the CV receives the translation commands from the RGS and SM and executes the maneuver.

(7) The Cargo Vehicle shall respond to thruster on/off commands from the SM to the small CV thrusters, when a crew–installed matching unit provides connection between the CV and the SM. This requirement shall be verified by ground tests. The tests will be considered successful when the CV thrusters respond correctly to commands from the SM TC.

(8) The Cargo Vehicle shall be designed to send propulsive effector and sensor data to the RGS. Verification of this requirement shall be done by demonstration. The demonstration will be performed during Stage verification with Russian flight and ground software and hardware models. The verification shall be considered successful if the RGS receives proper data from the RS.

(9) The Cargo Vehicle propulsion system shall have performance as shown in Table VI–A and VI–B. The operation of the thrusters, the quantity of expended propellant, and the operational life of components of the propulsion system will be verified during the ground test of components and the propulsion system in accordance with the Test Plans. In the case of task which have already been completed, the results will be reviewed at a joint meeting.

(10) The vehicle shall be designed to send propulsive effector data (status of thruster operations – on/off) to the SM, when a crew–installed matching unit provides connection between the CV and the SM. This requirement shall be verified by ground tests. The tests will be considered successful when the CV sends appropriate CV propulsive effector status data to the SM.

(11) The CV shall be capable of executing translation maneuvers utilizing propellants fed directly from the FGB or SM propellant tanks. This requirement shall be verified by analysis, ground tests, or by analogous flight unit performance in orbit in accordance with the Test Plans.

(12) The Cargo Vehicle shall be capable of executing a translational maneuver of up to 5 feet per second (1.5 meters per second) within ninety minutes of being commanded to execute the maneuver, within the functional responsibilities for the Cargo Vehicle as shown in Figures 4–B, 4–C, and 4–D. Verification of this requirement shall be done by test and/or analysis. The test and/or analyses will be performed utilizing RS flight software and hardware models to determine time required to initiate a reboost sequence based on pre–stored data packets and complete the translation burn of 5 fps (1.5 m/s). Verification will be considered successful when the analysis and/or test data show that the station can initiate achieve a change in velocity of up to 5 feet per second within ninety minutes of being commanded to activate the systems and perform the Progress tasks which are required to implement the translational maneuver, as shown in Figures 4–B, 4–C, and 4–D.

4.3.7.7.3.12 Control attitude – propulsive.

a. From activation of any Cargo Vehicle:

(1) TBD

b. When performing translation with main engine:

(1) The Cargo Vehicle shall control steady state attitude rates to within +/– .20 degrees/second in two axes when performing translational maneuvers, without SM support. Verification of this requirement shall be done by analysis. Analysis shall be performed utilizing analytical tools, simulations, models of the on–board hardware (including sensor errors and structural dynamics) and software. The verification shall be considered successful when the analysis data demonstrates that the CV can control the attitude rates to within +/– 0.20 degrees per second per axis.

(2) The Cargo Vehicle shall control transient attitude rates to within +/– 0.50 degrees/second in two axes when performing translational maneuvers without SM support. Verification of this requirement shall be done by analysis. Analysis shall be performed utilizing analytical tools, simulations, and models of the on–board hardware (including sensor errors and structural dynamics) and software. The verification shall be considered successful when the analysis data demonstrates that the CV can control the transient attitude rates to within +/– 0.50 degress per second per axis.

(3) The transient shall not exceed the steady state value for more than 30 seconds without SM support. Verification of this requirements shall be done by analysis. Analysis shall be performed utilizing analytical tools, simulations, and models of the on–board hardware (including sensor errors and structural dynamics) and software. The verification shall be considered successful when the analysis data demonstrates that the CV can control the attitude rates to within the steady state requirement value within 30 seconds from burn initiation.

(4) The Cargo Vehicle shall have the capability to control to inertial attitude about two axes using propulsive effectors without SM support. Verification of this requirement shall be done by demonstration. The verification shall be considered successful if the demonstration proves that the CV can control to an inertial attitude using propulsive effectors.

(5) TBD

c. When performing translation with CV small thrusters:

There are no CV attitude control requirements for this translation method.

4.3.7.7.3.13 Transport cargo.

Transport cargo shall be verified by analysis. The analysis shall be based on the segment level qualification results and Space Station configuration data. The analysis shall be considered successful when the data shows that the specified cargo can be transported by RS resupply vehicles.

AGREED.

4.3.7.7.3.15 Propellant transfer.

(1) The CV shall have the capability to leak check the propellant transfer interface between the CV and SM or UDM using pressurant gas from the propellant transfer system in response to

commands originating from the RGS. This requirement shall be verified by ground tests of analogous flight units in accordance with the Test Plans.

(2) The CV shall have the capability to purge propellant from the propellant transfer interface between the CV and SM or UDM before separation using pressurant gas from the propellant transfer system on the CV and external vacuum purge vents located on the SM or UDM. This requirement shall be verified by ground tests of analogous flight units in accordance with the Test Plans.

AGREED.

4.3.7.7.3.17 Capability, support prelaunch operations.

4.3.7.7.3.17.1 Load/Unload cargo items.

Load/unload cargo items shall be verified by analysis. The analysis shall be based on ground operations analysis, segment level qualification results, and Space Station configuration data. The analysis shall be considered successful when it is shown that the cargo vehicle can be launched in the specified time frame.

AGREED.

4.3.7.7.3.18 Cargo vehicle docking indication.

Current capability. No additional verification required.

AGREED.

4.3.7.7.3.21 Separation clearance range.

Verification that the nominal Cargo Vehicle separation procedures assure that the Cargo Vehicle is outside the range of 0.27 nmi (0.5 km) to the ISS within 22 minutes after the time of separation and will not re–enter this separation range shall be accomplished by analysis. The analysis shall consider unbalanced spring forces, all potential docking ports (including those available only during the assembly phase) and the excepted range of flight attitudes. The verification shall be considered successful if the analysis shows that a minimum 0.27 nmi (0.5 km) separation clearance is reached within 22 minutes and that the Cargo Vehicle does not subsequently re–enter the 0.27 nmi (0.5 Km) range to the ISS for each docking port and for the range of expected flight attitudes.

AGREED.

4.3.7.7.3.22 Provide automated collision avoidance maneuvers.

The capability for the Cargo vehicles to execute automated collision avoidance maneuvers to provide safe trajectories if an abort is initiated by onboard software or RGS shall be verified by analysis. The analysis shall consider the methods and their alternatives for initiating the different types of aborts and their regions of applicability, including the necessary implementation timeline. The verification shall be considered successful if the analysis shows that: the timeline is sufficient for selection, initiation and execution of the appropriate abort procedure; and, when executed, the automated abort procedures result in an abort maneuver sequence and subsequent trajectories that avoids a collision with the ISS. Soyuz crew capability to provide manual collision avoidance shall be verified by inspection.

AGREED.

4.3.7.7.3.23 Mission planning – rendezvous and docking.

Verification that the on–orbit software and RGS mission planning can produce Cargo vehicle rendezvous and docking reference profiles that provide the required minimum safety features shall be accomplished by analysis and demonstration. The analysis shall consider 3 sigma dispersed final rendezvous trajectories targeted out–of–plane to the range of ISS rendezvous altitudes both during the assembly sequence and subsequent to assembly complete. The demonstration shall show that detailed rendezvous and docking reference profiles can be produced and procedures provided to implement them. The verification shall be considered successful if: (1) the analysis shows the final rendezvous trajectories pass safely by the ISS, if no further maneuvers are conducted, and that the rendezvous and proximity operations trajectories can remain outside the 400m ”keep out zone” until start of the fly around phase; and (2) the demonstration produces a detailed reference profile and associated procedures.

AGREED.

4.3.7.8 Reserved.

4.3.7.9 Reserved.

4.3.7.10 Reserved.

4.3.7.10.3.1.2 Accommodate Mobile Servicing System.

Verification shall be in accordance with SSP50227, section C4.3.2.1.

AGREED.

4.3.7.10.3.1.2.1 PDGF Stand Load/Stiffness Limits.

Verification shall be in accordance with SSP50227, section C4.3.2.1.

AGREED.

4.3.7.10.3.1.3 PDGF Mounting Ring Assembly.

Verification shall be in accordance with SSP50227, section C4.3.2.1.

AGREED.

4.3.7.10.3.1.4 Video Signal Converter (VSC) Accommodation.

Verification shall be in accordance with SSP50227, section D4.3.2.1.

AGREED.

4.3.7.10.3.2 PDGF Video, power, data distribution.

4.3.7.10.3.2.1 PDGF Video.

Verification shall be by inspection of drawings. The verification shall be considered successful when the inspection shows that the FGB can accommodate the video cable.

4.3.7.10.3.2.2 PDGF Power.

Verification shall be in accordance with SSP50227, section C4.3.2.1.4.

AGREED.

4.3.7.10.3.2.3 MIL–STD–1553 Data.

Verification shall be performed as a part of paragraphs 4.3.2.2.7.1 and 4.3.3.1.7.

AGREED.

4.3.7.10.3.3 SSRMS on FGB PDGF Operations.

TBD

5.0 PREPARATION FOR DELIVERY.

6.0 NOTES.

6.1 Abbreviations and acronyms.

AC	Alternating Current
ACRV	Assured Crew Return Vehicle
APFR	Articulating Portable Foot Restraint
ATF	Autonomous Transfer Facilities
BC	Bus Controller
BFO	Blood Forming Organ
C	CE/SIUS
C&DH	Command and Data Handling
C&T	Communication and Tracking
CETA	Crew Equipment Translation Aids
CFU	Colony Forming Unit
CHeCS	Crew Health Care System
cm	Centimeter
CO2	Carbon Dioxide
COD	Chemical Oxygen Demand
COTS	Commercial–Off–The–Shelf
CV	Cargo Vehicle
dB	Decibel
DC	Direct Current
DC	Docking Compartment
DV	Delta Velocity
DSM	Docking and Stowage Module
EEE	Electrical, Electronic, and Electromechanical
EMC	Electromagnetic Compatibility
ESA	European Space Agency
EVA	Extravehicular Activity
F	Fahrenheit
FDIR	Failure Detection, Isolation and Recovery
FEL	First Element Launch
FGB	Functional Cargo Block
FT	Foot
GHz	Gigahertz
GN&C	Guidance, Navigation, and Control
H/W	Hardware
H2	Hertz
H2O	Water
Hg	Mercury
ICD	Interface Control Document
ISPR	International Standard Payload Rack

ISSA	International Space Station Alpha
IVA	Intravehicular Activity
Kg	Kilogram
KM	Kilometers
kW	Kilowatt
lbF	Pound, Force
LSM	Life Support Module
LVLH	Local Vertical/Horizontal
M/OD	Meteoroids and Orbital Debris
MCC	Mission Control Center
MCS	Motion Control System
MDM	Multiplexer Demultiplexer
mg	Milligram
mm	Millimeter
MPE	Maximum Permissible Exposure
MUA	Material Usage Agreement
nm	Nanometer
NTO	Nitrogen Tetoxide
NTU	Nephalonetric Turbidity Unit
O2	Oxygan
OLR	Outgoing Long–wave Radiation
OSE	Orbital Support Equipment
PBA	Portable Breathing Apparatus
PCS	Portable Computer System
PFE	Portable Fire Extinguisher
PFU	Plaque Forming Units
PHC	Permanent Human Capabilities
PMA	Pressurized Mating Adapter
PNP	Probability of No Penetration
p–p	peak to peak
psid	pounds per square inch differential
PT/Co	Platinum/Colbalt
RF	Radio Frequency
RGS	Russian Ground Segment
RM	Russian Modules
RMS	Remote Manipulator System; Root Mean Square
ROS	Russian Orbital Segment
RS	Russian Segment
RSA	Russian Space Agency
RSGF	Rigidized Sensing Grapple Fixture
RT	Remote Terminal

S/W	Software
SDMS	Structural Dynamics Measurement System
SEE	Single Event Effects
SM	Service Module
SMAC	Spacecraft Maximum Allowable Concentration
SPP	Science Power Platform
SS	Space Station
SSMB	Space Station Manned Base
SSQ	Space Station Quality
SVF	Software Verification Facility
TBR	To Be Resolved – a value has been negotiated and tentatively agreed to but final value is to be confirmed
TEA	Torque Equilibrium Attitude
TIUs	Terminal Interface Units
TM	Transport Module
TMMCH/Y	Total Mean Maintenance Crew Hours/Year
TON	Threshold Odor Number
TTN	Threshold Taste Number
UDM	Universal Docking Module
UDMH	Unsymmetrical Dimethal Hydrazine
UHF	Ultra High Frequency
US	United States
USGS	United States Ground Segment
USOS	United States On–Orbit Segment
V	Volts
VC–S	Visible Clean – Sensitive

6.2 Definitions.

BUS CODES: 1553 Bus codes are the individual identifiers for the separate bus lines that are routed throughout the End Item.

CATASTROPHIC HAZARD: Any hazard which may cause a disabling or fatal personnel injury, or cause loss of of the following: the Orbiter, ISS or major ground facility. For safety failure tolerance considerations, loss of the ISS is to be limited to those conditions resulting from failures or damage to elements of the ISS that render the ISS unusable for further operations, even with contingency repair or replacement of hardware, or which render the ISS in a condition which prevents further rendezvous and docking operations with ISS launch elements.

CREDIBLE FAILURE: An event that has a potential of occurring based on actual failure mode in similar systems.

CRITICAL HAZARD: Any hazard which may cause a non–disabling personnel injury, severe occupational illness, loss of a major ISS element, on–orbit life sustaining function or emergency system, or involves damage to Orbiter or a ground facility. For safety failure tolerance consideration, critical hazards include loss of ISS elements that are not in the critical path for station survival or which can be restored through contingency repair.

DESIGN FOR MINIMUM RISK: Design for minimum risk are areas where hazards are controlled by specification requirements that specify safety related properties and characteristics of the design that have been baselined by the ISS program requirements rather than failure tolerance criteria. The failure tolerance criteria of paragraph 3.3.6.1.1 and 3.3.6.1.2 shall only be applied to these designs as necessary to assure that credible failures that may affect the design do no invalidate the safety related properties of the design. For example, a pressure vessel shall be certified safe based upon its inherent properties to withstand pressure loading that have been verified by analysis and qualification and acceptance testing; however, failure criteria must be imposed upon external systems that might affect the vessel, such as a tank heater, to assure that failures of the heater do not cause the pressure to exceed the maximum design pressure vessel. Examples are structures, pressure vessels, pressurized lines and fittings, functional pyrotechnic devices, material compatibility, flammability, etc.

EFFECTIVE ATMOSPHERE VELOCITY: The effective atmosphere velocity of 15–40 fpm pertains to the time averaged velocity magnitudes in the crew occupied space, using averages over time periods sufficient to achieve stability. Two–thirds of the local velocity measurements, are within 15–40 fpm with a minimum velocity of 7 fpm and a maximum velocity of 200 fpm. Atmosphere velocities within 6 inches of the cabin interior surfaces are not considered.

FIRE EVENT: Localized or propagating combustion, pyrolysis, smoldering or other thermal degradation processes, characterized by the potentially hazardous release of energy, particulates, or gases.

FIRE PROTECTION (FP) LOCATION: Any rack, standoff, endcone, cabin, or other area containing powered equipment. FP locations may be enclosed or open.

HAZARD: The presence of a potential risk situation caused by an unsafe act or condition. A condition or changing set of circumstance that presents a potential for adverse or harmful consequences; or the inherent characteristics of any activity, condition or circumstance which can produce adverse or harmful consequences.

HAZARD CONTROLS: Design or operational features used to reduce the likelihood of occurrence of a hazardous effect. Hazard controls are implemented in the following order of precedence.

a. Elimination of hazards by removal of hazardous sources and operations.

b. Ensure inherent safety through provisions of appropriate design features, materials and parts selection, and safety factors. Design considerations to include damage control, containment, isolation of potential hazards, and failure considerations.

c. Reduce hazard to an acceptable level by incorporating safety devices as part of the system, subsystem, or equipment.

d. Minimize the effects of potential hazards through the use of warning devices, crew operational procedures, or protective clothing and/or equipment.

HAZARDOUS COMMAND: A command that can create an unsafe or hazardous condition which potentially endangers the crew or station safety. It is a command whose execution can lead to an identified hazard or a command whose execution can lead to a reduction in the control of a hazard such as the removal of a required safety inhibit to a hazardous function.

HOUSEKEEPING POWER: Power necessary to maintain the on–orbit station within minimum acceptable specification conditions in the standard–habitable and microgravity modes. No crew/ground EVA, robotics, payload operation, maintenance, assembly, activation, or checkout activities are taking place.

IGNITION SOURCE: An energy release capable of initiating a fire event.

IMPEDE: To obstruct or delay the progress or activation of a function.

IMPEDED: (past tense of impede) – to obstruct or delay the progress of.

INDEPENDENT INHIBIT: Two or more inhibits are independent if no single credible failure, event, or environment can eliminate more than one inhibit.

INDEPENDENT SAFING ACTION: An independent safing action is an action generated by a non failed component which is independent from the failed component being monitored. Any two safing actions are independent if no single fault can prevent both safing actions from transitioning the system to a safe state.

INHIBIT: A design feature that provides a physical interruption between an energy source and a function (such as a relay or transistor between a battery and a pyrotechnic initiator, a latch valve between a propellant tank and a thruster).

INTERLOCK: A design feature that ensures that any conditions perquisite for a given function or event are met before the function or event can proceed.

INVARIANT ECCENTRICITY: A computation of eccentricity which is modified from the standard Keplerian eccentricity such that it remains constant when propagated in a nonspherical gravitational field.

INVARIANT SEMIMAJOR AXIS: A computation of semimajor axis which is modified from the standard Keplerian semimajor axis such that it remains constant when propagated in a nonspherical gravitational field.

LOCAL CONTROL: A capability to accomplish a function at the direction of the crew within the applicable on–orbit module and also prevent reconfiguration of the function by an eternal entity during the specified period.

MARGIN OF STRENGTH: Margin of strength with respect to the design load is defined for Russian Segment structures by the following equation:

Margin of Strength = Ultimate Load/(Factor of Safety x Limit Load)

MODE: A group of related functions executed in a logical sequence with associated entry and exit rules required to accomplish specific operations of the system.

M/OD CRITICAL ITEM: An item deemed to be M/OD critical when effects resulting from meteoroid or orbital debris impact will endanger the crew or Space Station survivability.

NEAR REAL TIME MONITORING: Notification of changes inhibit or safety status on a periodic basis (nominally once per orbit). The capability of the hardware and software to provide the updated data for near real–time monitoring data is generally the lowest available frequency with normal telemetry, but will be determined on a case–by case basis depending on the time to effect of the hazard.

NONQUIESCENT PERIODS: Nonquiescent periods include Orbiter proximity, docking and undocking operations, Space Station reboost and attitude control operations, Space Station vent, dump operations, and crew EVA operations. The contamination environment defined in SSP 30426 includes both Orbiter and Space Station induced contamination.

OPERATOR ERROR: An inadvertent action by flight crew or ground operator that could eliminate, disable or defeat an inhibit, redundant system, containment feature, or other design features that is provided to control a hazard. The intent is not to include all possible actions by a crew person that could result in an inappropriate action but rather to limit the scope of error to those actions which were inadvertent errors such as an out–of–sequence step in a procedure or a wrong keystroke or an inadvertent switch throw.

PAYLOAD POWER: Power dedicated to payload operations within internal payload locations or at the external payload locations.

PAYLOAD SUPPORT POWER: Power dedicated to support the payload operations external of the payload locations. This power may be for special dedicated payload equipment or an increase power in housekeeping functions required to support payload operations.

PLACARD: A written announcement for display in a public place.

PLACARDED: (past tense of placard) – to post placards on or in. A placard is a printed or written announcement for display in a public place.

PRIMARY MODE: A Mode which provides the basic functional capabilities for the Space Station to operate as a facility and also a point of departure from which other modes add or subtract functionality and resources to support additional operations.

QUASI–STEADY: Accelerations which are either time–independent or have a frequency less than 0.01 Hz.

QUIESCENT PERIODS – A duration of time during which a low–vibration (microgravity) environment is imposed. For purposes of external contamination requirements, quiescent periods are those periods of time other nonquiescent periods.

RAPID SAFING: The capability of the shuttle to accomplish an emergency de–orbit or a de–orbit contingency to the next primary landing site.

REAL TIME MONITORING: Notification of changes in inhibit or safety status to the crew within a time frame at or near the time the change in status occurred. The frequency requirements of the hardware and software to provide the updated data for real–time monitoring is driven by the ability of the monitoring user to react to the change in status to implement appropriate safing responses, but will be determined on a case–by–case basis depending on the time to effect of the hazard.

RISK: Exposure to the change of injury or loss. Risk is a function of the possible frequency of occurrence of an undesirable event, of the potential severity of the resulting consequences, and of the uncertainties associated with the frequency and severity.

SAFE: A general term denoting an acceptable level of risk relative freedom from and low probability of: personal injury, fatality; loss or damage to vehicles, equipment or facilities; or loss or excessive degradation of the function of critical equipment.

SAFETY CRITICAL: A characteristic of a condition, event, operations, process, function, equipment or system (including software and firmware) with potential for personnel injury or loss, or with potential for loss or damage to vehicles, equipment or facilities, loss or excessive degradation of the function of critical equipment, or which is necessary to control a hazard.

SAFING: An action or sequence of actions necessary to place systems, subsystems or component parts into predetermined safe conditions.

STRUCTURE: For the purpose of failure tolerance requirements, the following types of equipment are considered structure: primary structure; secondary structure; pressure vessel and fluid line wall structure; micrometeoroid/orbital debris protection; and radiation shielding. Although not considered structure, redundant fluid lines and fittings, heat exchangers, and cabling including connectors are not required within any single or redundant path since failure tolerance requirements for a capability are achieved using alternate paths or unlike redundancy.

SOFT DOCK / SOFT CAPTURE: An initial temporary attachment made between two or more pieces of equipment that prevents inadvertent release prior to permanent attachment. The softdock mechanism is actuated by the physical engagement of mating equipment. Release of the mechanism may be accomplished through a reversal of the attachment procedure or may require additional procedural steps.

TERMINAL INTERFACE UNIT: Any subsystem component containing a remote terminal, or bus controller connected to a MIL–STD–1553 data bus (e.g., pressure control assembly, remote power controller, etc.)

TIME OF THRUST BUILD UP: The time from opening of a thruster or engine valve until the time when the thrust level reaches essentially full–thrust value.

TIME OF THRUST TAIL OFF: The time from closing of a thruster or engine valve until the time when the thrust level becomes essentially zero.

TORQUE EQUILIBRIUM ATTITUDE: The Torque Equilibrium Attitude (TEA) is defined as the Space Station attitude where the average external disturbance torques are in balance (i e., momentum storage requirements for control are bounded). The TEAs are established by the on–orbit Space Station configuration and the atmospheric density conditions.

TRANSIENTS: Impulse accelerations or accelerations of short time duration, characterized by broad frequency content which may excite modes of various structures. Typical transients are thruster firing, crew push–offs, drawer and door closing, machinery startups, etc.

VIBRATION: Periodic accelerations characterized by oscillatory motion of a body about a reference position, with discrete frequency components of measurable an identifiable amplitude. Vibration includes structural modes of modules, racks, and experimental hardware. Sources of vibration are typically machinery such as pumps and motors. This requirement includes vibrations between 0.01 and 300 Hz.

APPENDIX A: MATRIX OF APPLICABILITY OF 3.2.2 TO 3.5 REQUIREMENTS TO RUSSIAN VEHICLES.

A.1 Scope.

Section 3.2.2 to 3.5 identifies requirements applicable to the Russian Segment. However, not all requirements are automatically applicable to all the vehicles of the Russian Segment. Additionally, other requirements may be applicable, but require modification to be more correctly applied to a particular Russian element.

A.2 Appendix structure.

This matrix identifies how each element is affected by the requirement and whether it is fully applicable, not applicable, or requires specific vehicle modification.

A.3 Matrix of Applicability to Vehicles.

Definition of terms:

N/A: This requirement is not applicable to the vehicle.

PA: This requirement is partially applicable but requires tailoring to be fully applicable to the vehicle. The tailored requirements are located in the other paragraphs of the RS specification as noted in the “Notes” column.

A: This requirement is fully applicable to the vehicle.

RS: Although this requirement is not specifically applicable to the vehicle itself, the vehicle does need to be taken into consideration when verification is performed on the Russian Segment level.

Appendix A Applicability to vehicles

Paragrph Number	Title	Soyuz	CV	Notes
3.2.2	Physical characteristics			
3.2.2.1	Approach and departure corridor.	N/A	N/A	
3.2.2.2	Establish translation paths.	N/A	N/A	
3.2.2.3a,b	Establish worksites	N/A	N/A	
3.2.2.3.1	Common restraint hardware	N/A	N/A	
3.2.2.4	Provide external and internal stowage of tools and hardware	N/A	N/A	
3.2.2.5	ISS storage requirements	N/A	N/A	
3.2.2.6	Transfer crew and external hardware	N/A	N/A	
3.2.2.6a	Transfer crew and external hardware	N/A	N/A	
3.2.2.6b	Transfer crew and external hardware	N/A	N/A	

Appendix A Applicability to vehicles – Continued

3.2.2.7	Distribute commands and data	N/A	N/A	
3.2.2.7.1	Provide output amplitude	N/A	N/A	
3.2.2.8	SPP	N/A	N/A	
3.2.3	Reliability.			
3.2.3.1	Failure Tolerance.	RS	RS	
3.2.3.2	Service Life.	PA	PA	See 3.7.6.5.12 (Soyuz) and 3.7.7.3.24 (Progress)
3.2.3.3	Failure propagation	RS	RS	
3.2.3.4	Redundancy status	N/A	N/A	
3.2.4	Maintainability.			
3.2.4.1	Qualitative maintainability requirements	N/A	N/A	
3.2.4.1.1	Reserved			
3.2.4.1.2	Procedures and Tools.	N/A	N/A	
3.2.4.2	Quantitative maintainability requirements.			
3.2.4.2.1	Equipment maintenance time in non–pressurized Areas.	N/A	N/A	
3.2.4.2.2	Capability: Total Mean Maintenance Crew Hours/Year (TMMCH/Y).			
3.2.4.2.2.1	EVA Total Mean Maintenance Crew Hours/Year	N/A	N/A	
3.2.4.2.2.2	IVA Total Mean Maintenance Crew Hours/Year	N/A	N/A	
3.2.4.2.2.2.1	IVA in support of EVA	N/A	N/A	
3.2.4.2.3	Airlock cycles to support EVA	N/A	N/A	
3.2.4.3	Failure Detection, Isolation and Recovery.			
3.2.4.3.1	Manual control of FDIR.	N/A	N/A	
3.2.4.3.2	Testing at operating location.	N/A	N/A	
3.2.4.3.3	Manual FDIR	N/A	N/A	
3.2.4.3.4	Automatic functional recovery confirmation	N/A	N/A	
3.2.4.3.5	Automatic safing confirmation	N/A	N/A	
3.2.4.3.6	False alarm mitigation	N/A	N/A	
3.2.4.4	Pressure integrity	N/A	N/A	

Appendix A Applicability to vehicles – Continued

3.2.5	Docking mechanism and contact conditions	PA	PA	See 3.7.6.5.9.3.6 (Soyuz) and 3.7.7.3.26 (Progress)
3.2.6	Environmental conditions.			
3.2.6.1	On–orbit environmental conditions.			
3.2.6.1.1	Thermal environment.	RS	RS	
3.2.6.1.2	Neutral atmosphere.	RS	RS	
3.2.6.1.3	External contamination.	RS	RS	
3.2.6.1.4	Electromagnetic and geomagnetic fields.	RS	RS	
3.2.6.1.5	Plasma.	RS	RS	
3.2.6.1.6	Ionizing radiation.	RS	RS	
3.2.6.1.7	Reserved.			
3.2.6.1.8	Meteoroids and Orbital Debris (M/OD).	RS	RS	
3.2.6.1.9	Reserved			
3.2.6.1.10	Plume impingement pressures.	RS	RS	
3.2.6.1.11	Flight attitude table	RS	RS	
3.2.6.1.12	Reserved			
3.3	Design and construction.			
3.3.1	Materials, processes and parts.			
3.3.1.1	Reserved.			
3.3.1.2	Reserved.			
3.3.1.3	Materials and processes.	RS	RS	
3.3.1.4	Electrical, Electronic, and Electromechanical (EEE) parts	RS	RS	
3.3.1.5	Seal life.	PA	PA	See 3.7.6.5.12.1 (Soyuz) and 3.7.7.3.24.1 (Progress)
3.3.1.6	Fluid and connector standards.			
3.3.1.6a	Fluid and connector standards.	PA	PA	See 3.7.6.5.2.1 (Soyuz) and 3.7.7.3.14.1 (Progress)
3.3.1.6b	Fluid and connector standards.	N/A	N/A	
3.3.1.7	Capability: Provide propellant and pressurant gases	A	A	
3.3.2	Electromagnetic radiation.			

Appendix A Applicability to vehicles – Continued

3.3.2.1	Electromagnetic Compatibility (EMC).	RS	RS	
3.3.3	Nameplates and product marking.	N/A	N/A	
3.3.3.1	Labeling.	N/A	N/A	
3.3.3.1.1	Vendor labels.	N/A	N/A	
3.3.3.2	On–orbit labels.	N/A	N/A	
3.3.4	Workmanship.	RS	RS	
3.3.4.1	Cleanliness	RS	RS	
3.3.4.2	Cleanliness of surfaces in contact with fluids	RS	RS	
3.3.5	Reserved.			
3.3.6	Safety.			
3.3.6.1	General.			
3.3.6.1.1	Catastrophic Hazards	A	A	
3.3.6.1.2	Critical Hazards	A	A	
3.3.6.1.3	Design for minimum risk	A	A	
3.3.6.1.4	Control of functions resulting in critical hazards.			
3.3.6.1.4.1	Inadvertent operation resulting in a critical hazard	A	A	
3.3.6.1.4.2	Loss of a function resulting in a critical hazard	A	A	
3.3.6.1.5	Control of functions resulting in catastrophic hazards.			
3.3.6.1.5.1	Inadvertent operation resulting in a catastrophic hazard	A	A	
3.3.6.1.5.2	Loss of a function resulting in a catastrophic hazard	A	A	
3.3.6.1.6	Subsequent induced loads	N/A	N/A	
3.3.6.1.7.	Safety interlocks	N/A	N/A	
3.3.6.1.8	Environmental compatibility	RS	RS	
3.3.6.1.9	Redundant functions	A	A	
3.3.6.2	Hazard detection and safing.			
3.3.6.2.1	Safing prior to return/resupply/refurbishment	N/A	N/A	
3.3.6.2.2	Monitors.			
3.3.6.2.2.1	Status information	A	A	

Appendix A Applicability to vehicles – Continued

3.3.6.2.2.2	Hazardous function operation prevention	A	A	
3.3.6.2.2.3	Loss of input or failure	A	A	
3.3.6.2.2.4	Launch site availability	N/A	N/A	
3.3.6.2.2.5	Flight crew availability	A	RS	
3.3.6.2.3	Near real–time monitoring	RS	RS	
3.3.6.2.4	Real–time monitoring.			
3.3.6.2.4.1	Maintain status of hazard control	A	RS	
3.3.6.2.4.2	Crew response time and safing procedures	A	RS	
3.3.6.2.4.3	Ground monitoring	A	A	
3.3.6.2.4.4	C&W Detection and Confirmation.	N/A	N/A	
3.3.6.3	Command and computer control of hazardous functions.			
3.3.6.3.1	Computer control of hazardous functions	PA	PA	See 3.7.6.4.4 (Soyuz) and 3.7.7.3.5.2 (Progress)
3.3.6.3.1.1	Detection and recovery	A	A	
3.3.6.3.1.2	Independent safing action	A	A	
3.3.6.4	Hazardous materials.			
3.3.6.4.1	Hazardous fluid containment failure tolerance	A	A	
3.3.6.5	Pyrotechnics for RS applications	RS	RS	
3.3.6.6	Radiation.			
3.3.6.6.1	Ionizing radiation. (Reserved)			
3.3.6.6.2 (a)	Nonionizing radiation.	RS	RS	
3.3.6.6.2 (b)	Nonionizing radiation.	RS	RS	
3.3.6.6.3	Spacesuit electric field radiation	RS	RS	
3.3.6.6.4	Spacesuit magnetic field radiation	RS	RS	
3.3.6.7	Optics and lasers.			
3.3.6.7.1	Lasers.	N/A	N/A	
3.3.6.7.2	Optical requirements.			
3.3.6.7.2.1	Optical instruments	N/A	N/A	

Appendix A Applicability to vehicles – Continued

3.3.6.7.2.2	Personnel protection	A	N/A	
3.3.6.7.2.3	Direct viewing optical systems	N/A	N/A	
3.3.6.8	Electrical safety.			
3.3.6.8.1	Electrical power circuit overloads.			
3.3.6.8.1.1	Circiut overload protection	A	A	
3.3.6.8.1.2	Protective device sizing	A	A	
3.3.6.8.1.3	Bent pin or conductive contamination	A	A	
3.3.6.8.2	Crew protection for electrical shock.	A	A	
3.3.6.8.2.1	EVA crew protection for electric shock	N/A	N/A	
3.3.6.8.3	Re application of power.	N/A	N/A	
3.3.6.8.4	Batteries.	A	A	
3.3.6.9	Liquid propellant propulsion systems.			
3.3.6.9.1	Inadvertent engine firings	A	A	
3.3.6.9.1.1	Propellant flow control devices	A	A	
3.3.6.9.1.1.1	Thruster valves	A	A	
3.3.6.9.1.1.2	Operations	A	A	
3.3.6.9.1.2	Electrical inhibits	A	A	
3.3.6.9.1.3	Monitoring of electrical inhibits to prevent catastrophic thruster firing	A	A	
3.3.6.9.2	Propellant overheating	A	A	
3.3.6.9.3	Propellant leakage	A	A	
3.3.6.9.4	Reserved			
3.3.6.9.5	Plume impingement	N/A	RS	
3.3.6.9.6	Hazardous venting	RS	RS	
3.3.6.9.7	Monitoring propulsion system status	A	A	
3.3.6.9.8	The RS motion control system	N/A	RS	
3.3.6.10	Fire protection.			
3.3.6.10.1	Manual activation	RS	RS	
3.3.6.10.2	Isolation	RS	RS	
3.3.6.10.3	Suppression	RS	RS	
3.3.6.10.4	Suppressant.			
3.3.6.10.4.1	Suppressant material	RS	RS	

Appendix A Applicability to vehicles – Continued

3.3.6.10.4.2	Toxicity level	RS	RS	
3.3.6.10.5	Contamination	N/A	N/A	
3.3.6.10.6	Portable equipment.			
3.3.6.10.6.1	Proximity to entrance	RS	RS	
3.3.6.10.6.2	Location within element	RS	RS	
3.3.6.10.6.3	Set co–location	RS	RS	
3.3.6.11	Constraints.			
3.3.6.11.1	Pressurized volume depressurization and repressurization tolerance	PA	RS	See 3.7.6.4.5 (Soyuz)
3.3.6.11.2	Emergency egress	RS	RS	
3.3.6.11.3	Translation entry/exit paths	RS	RS	
3.3.6.11.4	Component hazardous energy provision	N/A	N/A	
3.3.6.11.5	Hatch opening	a) PA b) N/A	a) PA b) RS	a) See 3.7.6.4.6 (Soyuz) and 3.7.7.3.5.3 (Progress)
3.3.6.11.6	Hatch operations	N/A	N/A	
3.3.6.11.7	Pins or detachable parts	N/A	N/A	
3.3.6.11.8	Single crewmember entry/exit	A	N/A	
3.3.6.11.9	Reserved			
3.3.6.11.10	Equipment clearance for entrapment hazard	N/A	A	
3.3.6.11.11	Light fixture	A	A	
3.3.6.12	Human factors.			
3.3.6.12.1	Internal volume touch temperature.			
3.3.6.12.1.1	Continuous contact – high temperature	PA	PA	See 3.7.6.4.1.1 (Soyuz) and 3.7.7.3.5.1.1 (Progress)
3.3.6.12.1.2	Incidental or momentary contact – high temperature	N/A	N/A	
3.3.6.12.1.3	Internal volume low touch temperature	PA	PA	See 3.7.6.4.1.2 (Soyuz) and 3.7.7.3.5.1.2 (Progress)
3.3.6.12.2	External touch temperature for US EVA.	N/A	N/A	
3.3.6.12.3	External edge, corner, and protrusion radii.	N/A	N/A	
3.3.6.12.4	IVA internal corner and edge protection	A	A	
3.3.6.12.5	Reserved			
3.3.6.12.6	Latches.			
3.3.6.12.6.1	Design	A	A	
3.3.6.12.6.2	Protective covers or guards	A	A	

Appendix A Applicability to vehicles – Continued

3.3.6.12.7	Screws and bolts.	A	A	
3.3.6.12.8	Safety critical fasteners.	A	A	
3.3.6.12.9	Levers, cranks, hooks and controls.	A	A	
3.3.6.12.10	Burrs.	A	A	
3.3.6.12.11	Reserved.			
3.3.6.12.12	Protrusions.	N/A	N/A	
3.3.6.12.13	Pinch points.	N/A	N/A	
3.3.6.12.14	Emergency ingress for a non–impaired crew member.	N/A	N/A	
3.3.6.12.15	Flex hoses, lines, and cables.	N/A	N/A	
3.3.6.12.16	Translation routes and established worksites.			
3.3.6.12.16.1	Primary translation routes and established worksites	N/A	N/A	
3.3.6.12.16.2	Secondary translation routes and established worksites	N/A	N/A	
3.3.6.12.16.3	EVA crewmember contact isolation	N/A	N/A	
3.3.6.12.17	Moving or rotating equipment.	N/A	N/A	
3.3.6.13	Launch vehicle transport – Space Shuttle launch	N/A	N/A	
3.3.6.14	Ground interfaces and services – Space Shuttle launch	N/A	N/A	
3.3.6.15	Ground interfaces and services – Russian launch vehicle	N/A	N/A	
3.3.6.16	Ground support equipment safety requirements for SS launch of RS hardware	N/A	N/A	
3.3.7	Human engineering.			
3.3.7.1	Anthropometric requirements.			
3.3.7.1.a	Anthropometric requirements.	PA	N/A	See 3.7.6.3.6 (Soyuz)
3.3.7.1.b	Anthropometric requirements.	N/A	N/A	
3.3.7.2	External task location requirements.	N/A	N/A	

Appendix A Applicability to vehicles – Continued

3.3.7.3	Strength requirements.			
3.3.7.3.1	Normal operations.	RS	RS	
3.3.7.3.2	Maintenance.	N/A	N/A	
3.3.7.3.3	Emergency controls.	RS	RS	
3.3.7.4	Gloved operation.	N/A	N/A	
3.3.7.5	Location coding.			
3.3.7.5.1	Alphanumeric coding.	N/A	N/A	
3.3.7.5.2	Accommodate changes.	N/A	N/A	
3.3.7.5.3	Reserved			
3.3.7.5.4	EVA primary translation path.	N/A	N/A	
3.3.7.6	Housekeeping.	N/A	N/A	
3.3.8	Reserved.			
3.3.9	System security	N/A	N/A	
3.3.10	Environmental constraints.			
3.3.10.1	Acoustic emission limits.	RS	RS	
3.3.10.2	External contamination releases.	RS	RS	
3.3.10.3	Reserved			
3.3.10.4	Reserved			
3.3.11	Design for remote controlled external operations	N/A	N/A	
3.3.12	Design requirements.			
3.3.12.1	Structural design requirements.	PA	PA	See 3.7.6.5.12 (Soyuz) and 3.7.7.3.24 (Progress)
3.3.12.1.1	Structural design life for meteoroid and orbital debris analyses (TIM 23).	A	A	
3.3.12.1.1.1	Probability of No Penetration(TIM 23)			
3.3.12.1.1.1.1	Structure penetration.	N/A	A	Progress requirement for initial 3.7 yr. duration
3.3.12.1.1.1.1	Structure penetration.	N/A	TBR	Progress requirement for subsequent 11.3 yr. duration
3.3.12.1.1.1.1	Structure penetration.	TBR	N/A	Soyuz requirement for 15 yr. duration
3.3.12.1.1.2	Structural penetration for uninhabited modules with normally closed hatches	N/A	N/A	
3.3.12.1.2	EVA on–orbit induced loads.	N/A	N/A	

Appendix A Applicability to vehicles – Continued

3.3.12.1.3	Additional M/OD Space Protection	N/A	N/A	
3.3.12.2	Window, glass and ceramic structural design.	A	N/A	
3.3.12.3	Fracture control.	A	A	
3.3.12.4	Structural Design Constraints	N/A	N/A	
3.3.12.5	Fluid handling requirements.			
3.3.12.5.1	Fluid quantity determination.	N/A	PA	See 3.7.7.3.14.1 (Progress)
3.3.12.5.2	Interface hardware.	N/A	N/A	
3.3.12.5.3	Flexible lines and bellows design.	N/A	N/A	
3.3.12.6	Knobs and Fasteners.	N/A	N/A	
3.3.12.7	Atmosphere leakage.	RS	RS	
3.3.12.8	Operational Altitude.	PA	PA	See 3.7.6.5.9.3.9 (Soyuz) and 3.7.7.3.25 (Progress)
3.3.12.9	Preclude condensation	N/A	N/A	
3.3.12.10	Venting/dumping.	N/A	N/A	
3.3.13	EVA Equipment handling capabilities.	N/A	N/A	
3.3.14.	MIL–STD–1553 data bus addresses	N/A	N/A	
3.3.15	MIL–STD–1553 data bus constraints	N/A	N/A	
3.3.16	Terminal Interface Units	N/A	N/A	
3.3.17	RS not–to–exceed bus length	N/A	N/A	
3.4	Computer resource requirements.			
3.4.1	Computer hardware design considerations.	N/A	N/A	
3.4.2	Flexibility and expansion	N/A	N/A	
3.5	Logistics.			
3.5.1	Maintenance.			
3.5.1.1	General maintenance requirements.			
3.5.1.1.1	RS logistics infrastructure.	N/A	N/A	
3.5.1.1.2	ORU maintenance level distribution.	N/A	N/A	
3.5.1.2	Perform On–Orbit Maintenance.			
3.5.1.2.1	ORU removal and replacement.	N/A	N/A	

Appendix A Applicability to vehicles – Continued

3.5.1.2.2	In Situ maintenance.	N/A	N/A	
3.5.1.2.3	Maintenance coordination.	N/A	N/A	
3.5.1.2.4	ORU packaging.	N/A	N/A	
3.5.1.2.5	Procedure storage	N/A	N/A	
3.5.1.2.6	Liquid or Gas Venting	N/A	N/A	
3.5.2	Supply.			
3.5.2.1	General supply requirements.			
3.5.2.1.1	Sustaining fleet resources.	N/A	RS	
3.5.2.1.2	Missed resupply crew provisions.	N/A	N/A	
3.5.2.1.3	Maintenance resources.	N/A	N/A	
3.5.2.1.4	On–orbit propellant reserve	N/A	RS	
3.5.2.2	Provide inventory management capability.			
3.5.2.2.1	Critical item storage.	N/A	N/A	
3.6	Reserved			